"THE MATERIAL HEREIN IS FOR INFORMATION PURPOSES ONLY AND IS SUBJECT TO CHANGE WITHOUT NOTICE. DIGITAL EQUIPMENT CORPORATION ASSUMES NO RESPONSIBILITY FOR ANY ERRORS WHICH MAY APPEAR HEREIN"

FIELD MAINTENANCE PRINT SET

"THIS DRAWING AND SPECIFICATIONS, HEREIN, ARE THE PROPERTY OF DIGITAL EQUIPMENT CORPORATION AND SHALL NOT BE REPRODUCED OR COPIED OR USED IN WHOLE OR IN PART AS THE BASIS FOR THE MANUFACTURE OR SALE OF ITEMS WITHOUT WRITTEN PERMISSION. COPYRIGHT © 1976, DIGITAL EQUIPMENT CORPORATION."

TABLE OF CONTENTS

B-TC-1134A-Ø-1	FIELD MAINTENANCE PRINT SET (1134A)
E-UA-1134A-Ø-Ø	UNIT ASSEMBLY (1134A)
C-PL-1134A-Ø-Ø	PARTS LIST (1134A)
B-DD-1134A-Ø-Ø	DRAWING DIRECTORY (1134A)
MPØØ192	PRINT SET KD11-EA (COMPLETE SET)
D-CS-M93Ø1-Ø-1	UNIBUS TERMINATOR/BOOT STRAP
D-CS-M93Ø2-Ø-1	UNIBUS TERMINATOR
MPØØØ17	PRINT SET KY11-LA (COMPLETE SET)
MPØØØ15	PRINT SET KY11-LB (COMPLETE SET)
MPØØ1Ø6	PRINT SET DL11-W (COMPLETE SET)
B-CS-M785Ø-Ø-1	PARITY MODULE
B-CS-G727-Ø-1	GRANT CONTINUITY
MPØØØ21	PRINT SET MS11-E (COMPLETE SET)
MPØØØ32	PRINT SET MM11-D (COMPLETE SET)
MP00317	PRINT SET MM11-YP (COMPLETE SET)
B-DD-DD11-P	DRAWING DIRECTORY DD11-P (COMPLETE SET)
MPØØØ18	PRINT SET BA11-L (COMPLETE SET)
E-UA-BA11-K-Ø	UNIT ASSY BA11-K
A-PL-BA11-K-Ø	UNIT ASSY BA11-K (PL)
B-DD-BA11-K	DRAWING DIRECTORY BA11-K
MPØØ27Ø	PRINT SET 1134A P.S. (COMPLETE SET)
C-IA-7011413-0-0	EXTERNAL BOOT CABLE
C-IA-7011411-0-0	CONSOLE CABLE
D-IA-7011992-0-0	CONSOLE POWER HARNESS
A-PL-1134A-Ø-4	SHIPPING LIST (1134A)
D-CS-M9312-0-1	UNIBUS TERM. BOOT STRAP

	115V	23ØV
	UNIT VARIATIONS COVERED BY THIS PRINT SET	
5.25 Box	1134A-DC	1134A-DD
	1134A-HC	1134A-HD
	1134A-LC	1134A-LD
	1134A-MC	1134A-MD
	1134A-JC	1134A-JD
10.5 Box	1134A-DH	1134A-DJ
	1134A-HH	1134A-HJ
	1134A-LH	1134A-LJ
	1134A-MH	1134A-MJ
	1134A-DE	1134A-DF
	1134A-HE	1134A-HF
	1134A-LE	1134A-LF
	1134A-ME	1134A-MF
	1134A-JH	1134A-JJ
	1134A-JE	1134A-JF

1134A
Field Maintenance Print Set

Digital Equipment Corporation

PRINT SET ORDER NO.
MPØØ19Ø

REV.	CHG. NO.	DATE
A	1134A-7	12-77
B	1134A-8	2-78

REVISIONS

USED ON OPTION/MODEL

SHEET I OF I

DRN.	D. HEALY	DATE NOV 76
CHK'D	D. HEALY	DATE NOV 76
PROJ. ENG.	DAVE MOBERLY	DATE 13JAN77
FIELD SERV.	ROY M EVANS	DATE 13JAN77

digital

TITLE: 1134A FIELD MAINTENANCE PRINT SET

SIZE	CODE	NUMBER	REV.
B	TC	1134A-Ø-1	B

DIST.

DRB 124

EN 01124 16 NOV 76 (2-77)

BLANK

THIS DRAWING AND SPECIFICATIONS, HEREIN, ARE THE PROPERTY OF DIGITAL EQUIPMENT CORPORATION AND SHALL NOT BE REPRODUCED OR COPIED OR USED IN WHOLE OR IN PART AS THE BASIS FOR THE MANUFACTURE OR SALE OF ITEMS NOT MADE TO THIS DRAWING. COPYRIGHT © 1976 DIGITAL EQUIPMENT CORPORATION

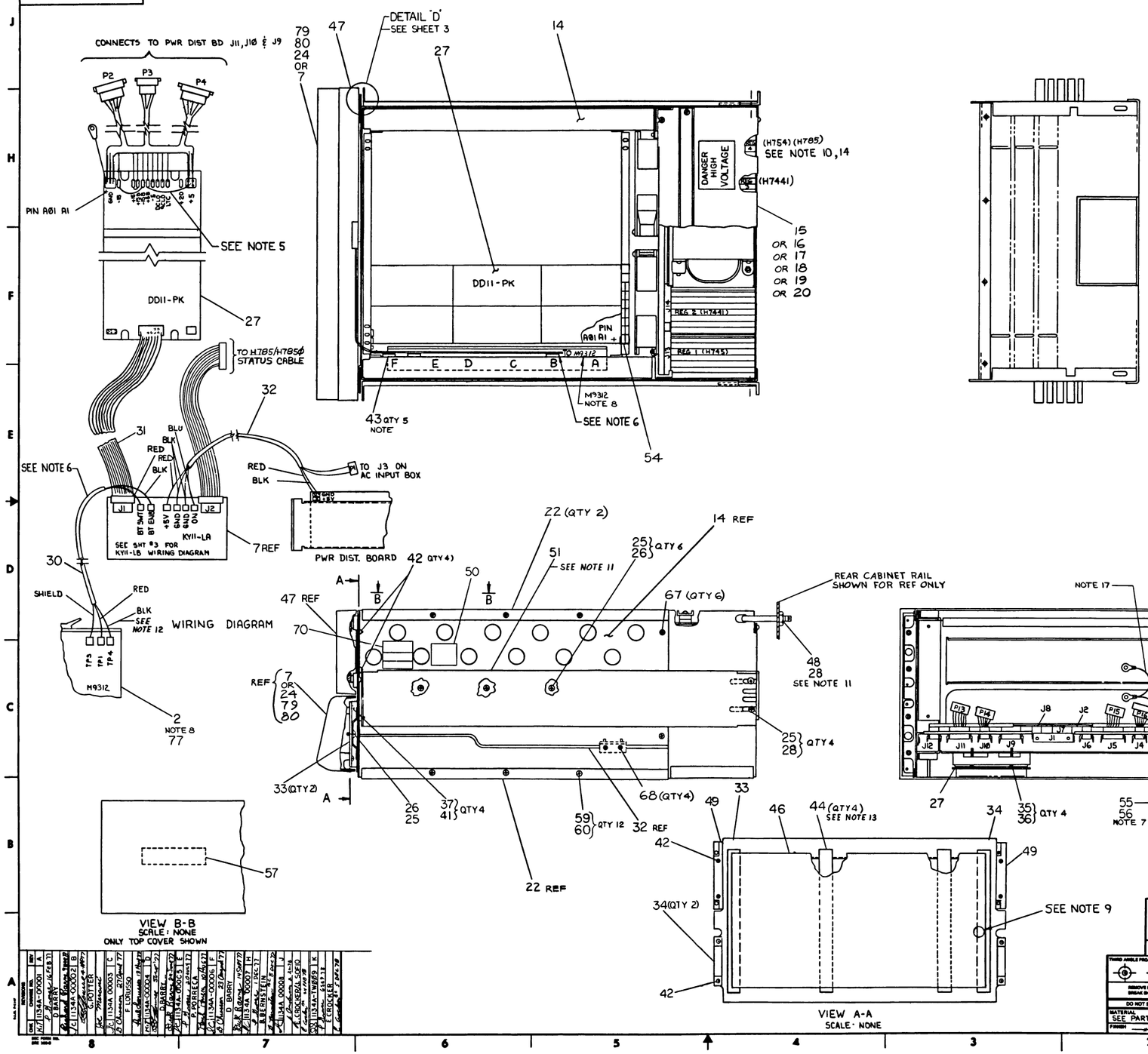

NOTES:

1. CAUTION: OFF SHEET PARTS LIST EXISTS SEE C-PL-1134A-Ø-Ø
2. SEE DD11-P MODULE UTILIZATION DRAWING FOR MODULE PLACEMENT INFORMATION
3. FOR ADDITIONAL INFORMATION REFER TO E-UA-BA11-K-Ø
4. TIGHTEN ALL SYSTEM UNIT MOUNTING SCREWS TO 13 IN LBS WITH A TORQUE SCREW DRIVER
5. WHEN THE DD11-PK IS USED WITH A BA11-K EXPANSION BOX WITHOUT BATTERY BACK UP (IE, NO 785 OR 7850), INSTALL THE THREE JUMPERS SHOWN.
   A) -15 TO -15B
   B) +15 TO +15B
   C) +5 TO +5B (SEE NOTE 16)
   USE # 20 INSULATED BUS WIRE ON SIDE 2 THIS WILL PROVIDE POWER TO THE MOS MEMORY VOLTAGE RAILS
6. LOOP THE M9312 CABLE ITEM # 30 UNDER THE CABLE HOLD DOWN BAR. (SERVICE LOOP)
7. TIE DOWN P16, PART OF ITEM # 14, WITH TWO TIE WRAPS (ITEM # 55 WHEN H754 IS NOT USED
8. EITHER M9312 OR M9301 MAYBE USED BUT NOT BOTH.
9. CUTOUT IN FILTER ITEM # 46 FOR ROUTING OF CABLES ITEM # 32 & 30.
10. H754 REGULATOR AVAILABLE ONLY IN CORE MEMORY SYSTEMS
11. ITEMS 38, 39, 48 & 51 ARE INSTALLED AT F A. AND T
12. IN PDP 1134A SYSTEMS WITHOUT BATTERY BACKUP (OPTION H775) THE TP4 CONNECTION TO THE M9312 WILL CAUSE BOOTS ON ALL POWER RESTARTS. IF BOOTS ON POWER RESTARTS ARE NOT DESIRED, REMOVE THE TP1 CONNECTION, INSULATE THE CABLE TERMINAL AND TIE IT BACK ON ITSELF WITH A TIE WRAP.
13. REPLACE FOAM STRIPS WITH ITEM 44.
14. THE H785 IS USED FOR BATTERY BACKUP OF MOS MEMORY ONLY. IF THE H785 IS INSTALLED, REMOVE NOTE 5 JUMPERS AND ADD ITEM # 69 FROM J2 OF THE KY11 TO THE STATUS CABLE OF THE H785 POWER SUPPLY
15. ~~USE EXSISTING HARDWARE ON POWER SUPPLY ASSEMBLY IN 2 PLACES.~~
16. BA11-K 5 THAT USE THE 5410864-YA-1 POWER DISTRIBUTION (IE, 1134A, 11/34 WITH FP11-AL) AND SOME 11/04'S) AND HAVE ONE DD11 CK (OR AN ADDITIONAL DD11-DK) CAN ONLY HAVE THE +5 TO +5B JUMPER IN ONE OF THE BACK PANELS IF TWO OF THE BACK PANELS HAVE THE JUMPER IN, THE +5V REGULATORS MAY BE CONNECTED TOGETHER TYPICALLY THIS JUMPER IS IN THE FIRST BACK PANEL, BUT IT MAY BE PLACED IN ONE OF THE OTHER BACK PANELS IF DEEMED NECESSARY FOR POWER REQ
17. GND THE GRN W/YELLOW TRACE CHASSIS GND TERMINAL WITH TWO WIRE ON THE STANDOFF. GND THE OTHER TERMINAL TO THE STUD ON THE AC INPUT ASSY. GND THE AC INPUT ASSY. TO THE STUD ON THE H765 P.S.

10½" BOX (BA11-K)

OFF SHEET PARTS LIST EXISTS
SEE C-PL-1134A-Ø

REVISIONS			
DWG			REV
1134A-0-0001			A
1134A-0-0002			B
1134A-0-0003			C
1134A-0-0004			D
1134A-0-0005			E
1134A-0-0006			F
1134A-0-0007			G
1134A-0-0008			H
1134A-0-0009			J
1134A-0-0010			K

DESCRIPTION	DWG/PART NO.	ITEM NO.
UNLESS OTHERWISE SPECIFIED DIMENSIONS ARE IN INCHES		

ANGLES ±2°	DEGREE OF ACCURACY (CHECK ONE)	NOMINAL DIMENSION RANGE INCHES					
SURFACE QUALITY ±1		0-6	6-12	12-24	24-48	48-96	OVER 96
	MEDIUM	±.005	±.010	±.015	±.020	±.030	±.04
MICROINCHES	FINE/PRECISION	±.002	±.005	±.005	±.01	±.015	±.02

QUANTITY & VARIATION

THIRD ANGLE PROJECTION

REMOVE BURRS AND BREAK SHARP CORNERS

DO NOT SCALE DWG

MATERIAL: SEE PARTS LIST
FINISH: —

DRN	R. Hanson	11-4-76
CHK'D	D. Noel	11-4-76
ENG.		
PROJ. ENG.		
PROD.		

NEXT HIGHER ASSY: B-00-1134A-0
SCALE: —
SHEET 1 OF 3

FIRST USED ON: 11/34A

TITLE: UNIT ASSY 1134A

SIZE	CODE	NUMBER	REV
B	UA	1134A-0-0	K

DIST

TW

"THIS DRAWING AND SPECIFICATIONS, HERein, ARE THE PROPERTY OF DIGITAL EQUIPMENT CORPORATION AND SHALL NOT BE REPRODUCED OR COPIED OR USED IN WHOLE OR IN PART AS THIS DWG FOR THE MANUFACTURE OR SALE OF ITEMS WITHOUT WRITTEN PERMISSION. COPYRIGHT © 1976 DIGITAL EQUIPMENT CORPORATION"

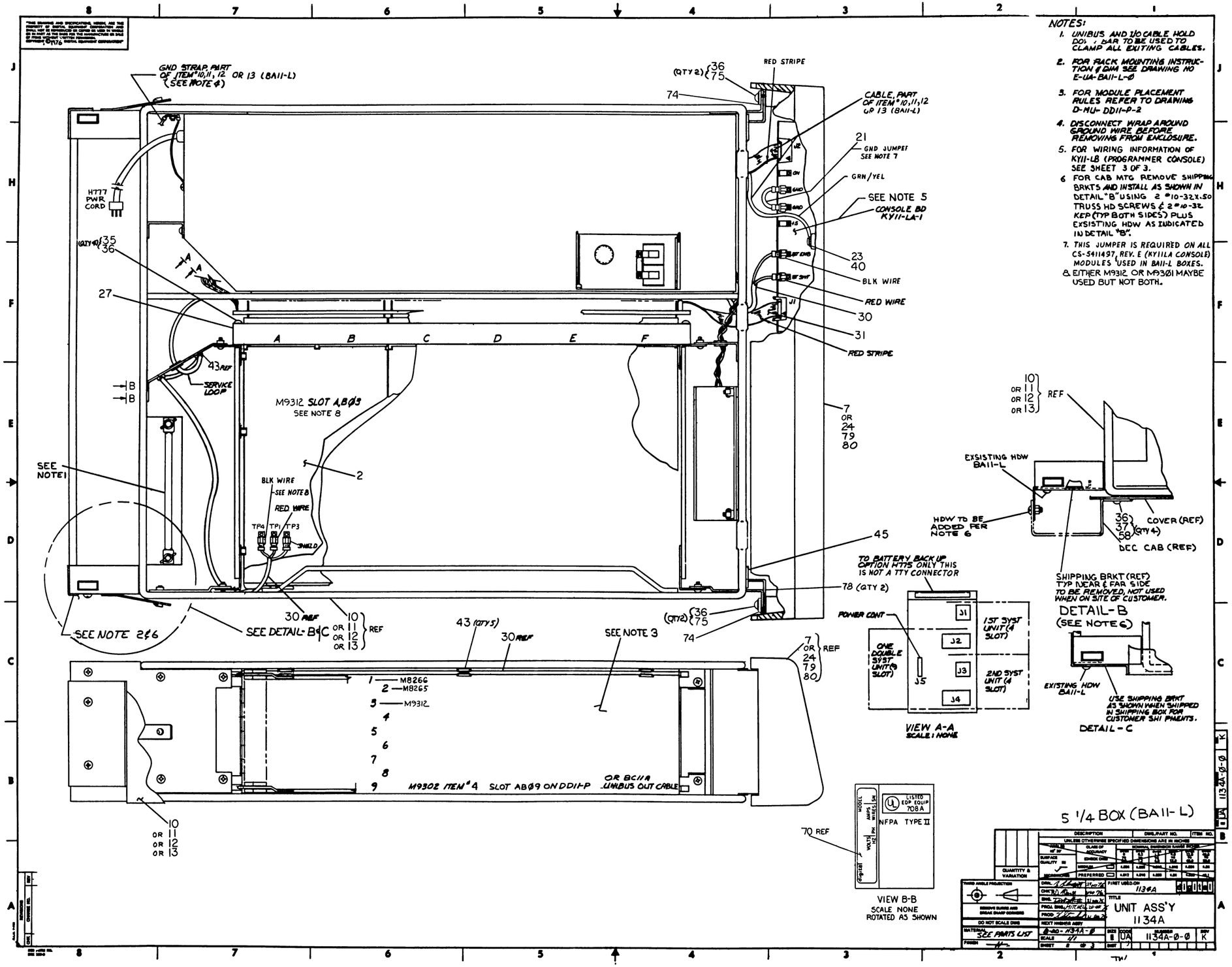

NOTES:

1. UNIBUS AND I/O CABLE HOLD DOWN BAR TO BE USED TO CLAMP ALL EXITING CABLES.
2. FOR RACK MOUNTING INSTRUCTION & DIM SEE DRAWING NO E-UA-BA11-L-Ø
3. FOR MODULE PLACEMENT RULES REFER TO DRAWING D-MU-DD11-P-2
4. DISCONNECT WRAP AROUND GROUND WIRE BEFORE REMOVING FROM ENCLOSURE.
5. FOR WIRING INFORMATION OF KY11-LB (PROGRAMMER CONSOLE) SEE SHEET 3 OF 3.
6. FOR CAB MTG REMOVE SHIPPING BRKTS AND INSTALL AS SHOWN IN DETAIL "B" USING 2 #10-32X.50 TRUSS HD SCREWS & 2 #10-32 KEP (TYP BOTH SIDES) PLUS EXSISTING HDW AS INDICATED IN DETAIL "B".
7. THIS JUMPER IS REQUIRED ON ALL CS-5411497, REV. E (KY11LA CONSOLE) MODULES USED IN BA11-L BOXES.
8. EITHER M9312 OR M9301 MAYBE USED BUT NOT BOTH.

THIS DRAWING AND SPECIFICATIONS, HEREIN, ARE THE PROPERTY OF DIGITAL EQUIPMENT CORPORATION AND SHALL NOT BE REPRODUCED OR COPIED OR USED IN WHOLE OR IN PART AS THE BASIS FOR THE MANUFACTURE OR SALE OF ITEMS WITHOUT WRITTEN PERMISSION.
COPYRIGHT © 1976 DIGITAL EQUIPMENT CORPORATION

NOTES:

1. THE M7859 PROGRAMERS CONSOLE INTERFACE MODULE MUST BE INSTALLED INTO AN SPC SLOT.
2. PART OF THE KY11-LB OPTION
3. PRESENT ONLY IN SYSTEMS WITH H785 BATTERY BACK UP REGULATOR
4. KY11-LB CABLE IS TO BE RUN BEHIND THE CONSOLE BUT IN FRONT OF THE FILTER TO THE RIGHT SIDE OF THE MACHINE THEN THRU THE HOLE IN THE FILTER AND UP OVER THE CPU MODULES TO THE M7859.

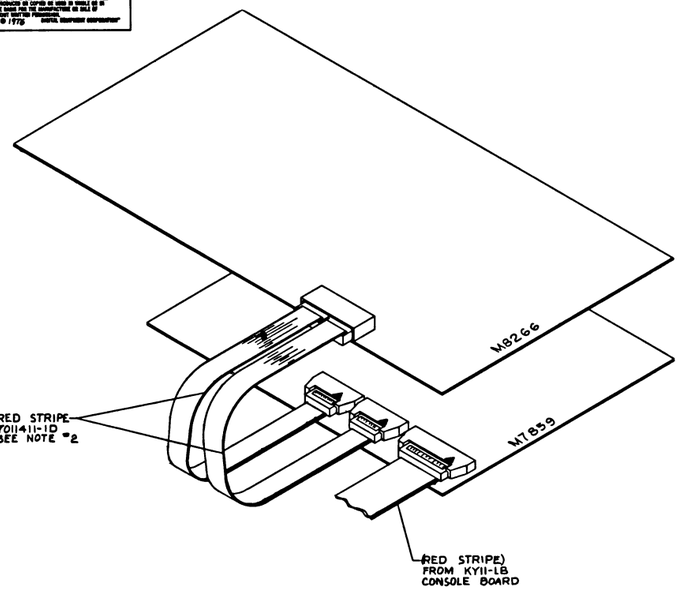

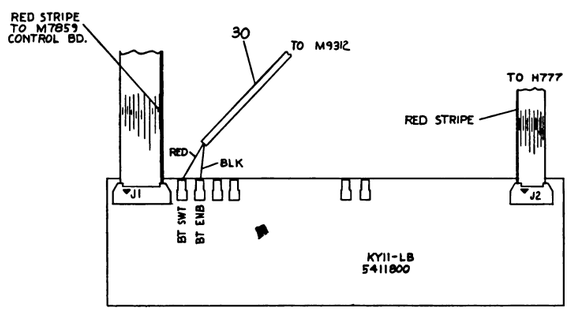

BA11-L
5 1/4 MTG. BOX

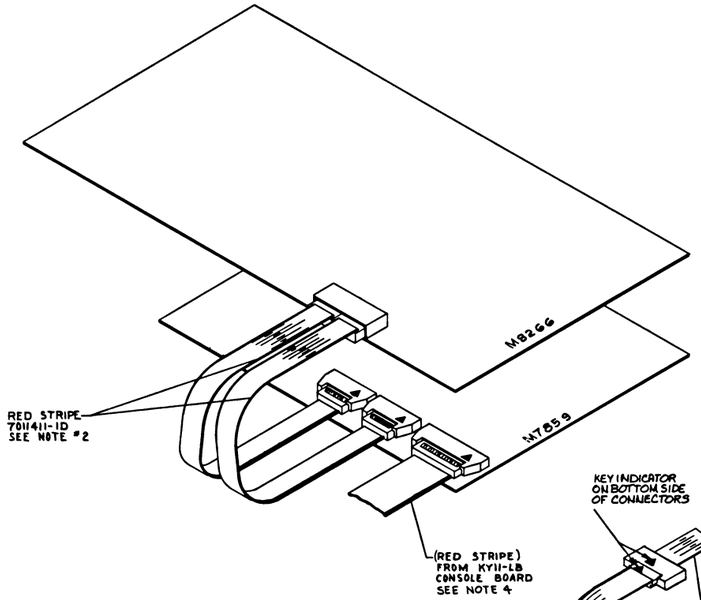

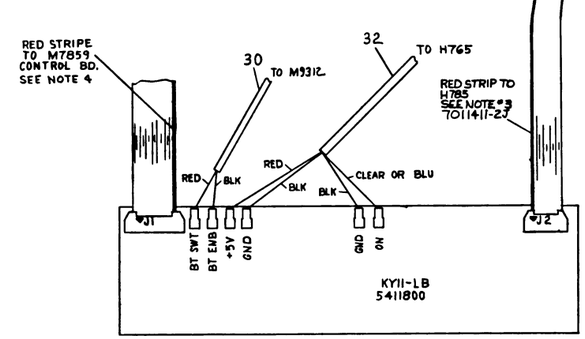

BA11-K
10 1/2 MTG. BOX

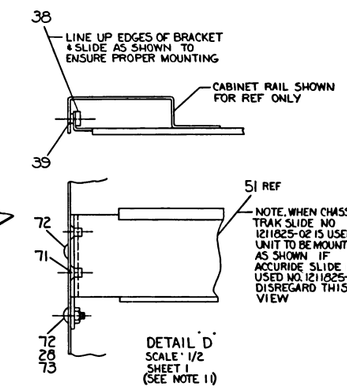

REVISIONS		
CHG.	CHANGE NO.	REV

TITLE UNIT ASSY 1134A	SIZE/CODE E UA	NUMBER 1134A-Ø-Ø	REV K
SCALE NONE SHEET 2 OF 3	DIST		

TW

THIS DRAWING AND SPECIFICATIONS, HEREIN ARE THE PROPERTY OF DIGITAL EQUIPMENT CORPORATION AND SHALL NOT BE REPRODUCED OR COPIED OR USED IN WHOLE OR IN PART AS THE BASIS FOR THE MANUFACTURE OR SALE OF ITEMS WITHOUT WRITTEN PERMISSION. COPYRIGHT © 1976 , DIGITAL EQUIPMENT CORPORATION

ITEM NO.	DRAWING NO.	DESCRIPTION	1134A-DC	1134A-DD	1134A-BC	1134A-BD	1134A-LC	1134A-LD	1134A-MC	1134A-MD	1134A-JC	1134A-JD	1134A-DH	1134A-DJ	1134A-HH	1134A-HJ	1134A-LH	1134A-LJ	1134A-MH	1134A-MJ	1134A-DE	1134A-DF	1134A-HE	1134A-HF	1134A-LE	1134A-LF	1134A-ME	1134A-MF	1134A-JE	1134A-JJ	1134A-JE	1134A-JF	1134A-X1	1134A-X2	1134A-X3	1134A-Y1
1	A-PL-KD11-EA-Ø	1134A PROCESSOR	1	1	1	1	1	1	1	1	1	1	1	1	1	1	1	1	1	1	1	1	1	1	1	1	1	1	1	1	1	1	1	1	1	1
2	D-CS-M93Ø1-YF-1	TERMINATOR/BOOT STRAP (NOTE 2)	1	1	1	1	1	1	1	1	1	1	1	1	1	1	1	1	1	1	1	1	1	1	1	1	1	1	1	1	1	1	1	1	1	1
3	D-CS-M93Ø2-Ø-1	UNIBUS TERMINATOR/SACK TURN AROUND	1	1	1	1	1	1	1	1	1	1	1	1	1	1	1	1	1	1	1	1	1	1	1	1	1	1	1	1	1	1	1	1	1	1
4	B-CS-G727-Ø-1	GRANT CONTINUITY	6	6	6	6	5	5	5	5	5	5	6	6	6	6	5	5	5	5	5	5	5	5	4	4	4	4	5	5	5	5	6	6	7	7
5	A-PL-DL11-WA-Ø	SERIAL LINE/LINE CLOCK (DL11-W) **	-	-	-	-	-	-	-	-	-	-	-	-	-	-	-	-	-	-	1	1	1	1	1	1	1	1	-	-	1	1	1	1	1	1
6	D-CS-M785Ø-Ø-1	PARITY. MEMORY MODULE	1	1	1	1	1	1	1	1	1	1	1	1	1	1	1	1	1	1	1	1	1	1	1	1	1	1	1	1	1	1	-	-	-	-
7	D-UA-KY11-LA-Ø	CONSOLE, OPERATORS	1	1	1	1	1	1	1	1	1	1	1	1	1	1	1	1	1	1	-	-	-	-	-	-	-	-	1	1	-	-	-	-	-	-
8	A-PL-MS11-JP	MEMORY, MOS 16K PARITY (M7847)	1	1	-	-	2	2	-	-	-	-	1	1	-	-	2	2	-	-	1	1	-	-	2	2	-	-	-	-	-	-	-	-	-	-
9	D-UA-MM11-DP-Ø	MEMORY, CORE 16K PARITY	-	-	1	1	-	-	2	2	-	-	-	-	1	1	-	-	2	2	-	-	1	1	-	-	2	2	-	-	-	-	-	-	-	-
10	E-UA-BA11-LK-Ø	MTG. BOX 5.25 CORE/MOS 115V	-	-	1	-	-	-	1	-	1	-	-	-	-	-	-	-	-	-	-	-	-	-	-	-	-	-	-	-	-	-	-	-	-	-
11	E-UA-BA11-LL-Ø	MTG. BOX 5.25 CORE/MOS 23ØV	-	-	-	1	-	-	-	1	-	1	-	-	-	-	-	-	-	-	-	-	-	-	-	-	-	-	-	-	-	-	-	-	-	-
12	E-UA-BA11-LM-Ø	MTG. BOX 5.25 MOS ONLY 115V	1	-	-	-	1	-	-	-	-	-	-	-	-	-	-	-	-	-	-	-	-	-	-	-	-	-	-	-	-	-	-	-	1	-
13	E-UA-BA11-LN-Ø	MTG. BOX 5.25 MOS ONLY 23ØV	-	1	-	-	-	1	-	-	-	-	-	-	-	-	-	-	-	-	-	-	-	-	-	-	-	-	-	-	-	-	-	-	-	1
14	D-UA-BA11-KA-Ø	MTG. BOX 10.5	-	-	-	-	-	-	-	-	-	-	1	1	1	1	1	1	1	1	1	1	1	1	1	1	1	1	1	1	1	1	1	1	-	-
15	E-UA-7013323-00-0	POWER SUPPLY ASSEMBLY 120V/MOS	-	-	-	-	-	-	-	-	-	-	1	-	-	-	1	-	-	-	1	-	-	-	1	-	-	-	-	-	-	-	1	-	-	-
16	E-UA-7013323-01-0	POWER SUPPLY ASSEMBLY 120V/MOS/H785	-	-	-	-	-	-	-	-	-	-	-	-	-	-	-	-	-	-	-	-	-	-	-	-	-	-	-	-	-	-	-	-	-	-
17	E-UA-7013323-02-0	POWER SUPPLY ASSEMBLY 120V/Core/H754	-	-	-	-	-	-	-	-	-	-	-	1	-	-	-	1	-	-	-	1	-	-	-	1	-	1	-	1	-	-	-	-	-	-
18	E-UA-7013323-03-0	POWER SUPPLY ASSEMBLY 240V/MOS	-	-	-	-	-	-	-	-	-	-	-	1	-	-	-	1	-	-	-	1	-	-	-	1	-	-	-	-	-	-	-	1	-	-
19	E-UA-7013323-04-0	POWER SUPPLY ASSEMBLY 240V/MOS/H785	-	-	-	-	-	-	-	-	-	-	-	-	-	-	-	-	-	-	-	-	-	-	-	-	-	-	-	-	-	-	-	-	-	-
20	E-UA-7013323-05-0	POWER SUPPLY ASSEMBLY 240V/Core/H754	-	-	-	-	-	-	-	-	-	-	-	-	-	1	-	-	-	1	-	-	-	1	-	-	-	1	-	1	-	1	-	-	-	-
21	C-IA-7012752-0A	CABLE JUMPER (BA11-L)	1	1	1	1	1	1	1	1	1	1	-	-	-	-	-	-	-	-	-	-	-	-	-	-	-	-	-	-	-	-	-	-	1	1
22	D-IA-7009768-0-0	COVER CHASSIS (BA11-K)	-	-	-	-	-	-	-	-	-	-	2	2	2	2	2	2	2	2	2	2	2	2	2	2	2	2	2	2	2	2	2	2	-	-
23	9008072	WASHER,EX, TOOTH #8	1	1	1	1	1	1	1	1	1	1	-	-	-	-	-	-	-	-	-	-	-	-	-	-	-	-	-	-	-	-	-	-	1	1
24	D-UA-KY11-LB-Ø	CONSOLE PROGRAMMERS	-	-	-	-	-	-	-	-	-	-	-	-	-	-	-	-	-	-	1	1	1	1	1	1	1	1	-	-	1	1	1	1	1	1
25	9006071-3	SCREW, PHL. TRUSS HD #10 - 32 x .38	-	-	-	-	-	-	-	-	-	-	12	12	12	12	12	12	12	12	12	12	12	12	12	12	12	12	12	12	12	12	12	12	-	-
26	9007651	WASHER EXTERNAL TOOTH #10	-	-	-	-	-	-	-	-	-	-	8	8	8	8	8	8	8	8	8	8	8	8	8	8	8	8	8	8	8	8	8	8	-	-
27	A-PL-DD11-PK-Ø	BACKPLANE, 9 SLOT	1	1	1	1	1	1	1	1	1	1	1	1	1	1	1	1	1	1	1	1	1	1	1	1	1	1	1	1	1	1	1	1	1	1
28	9006565	NUT, KEPS #10 - 32	-	-	-	-	-	-	-	-	-	-	7	7	7	7	7	7	7	7	7	7	7	7	7	7	7	7	7	7	7	7	7	7	-	-
29	B-MU-DD11-P-2	MODULE UTILIZATION (DD11-P)	REF	—	—	—	—	—	—	—	—	—	—	—	—	—	—	—	—	—	—	—	—	—	—	—	—	—	—	—	—	—	—	—	REF	
30	C-IA-7011413-3F-Ø	CABLE EXTERNAL BOOT M93Ø1	1	1	1	1	1	1	1	1	1	1	1	1	1	1	1	1	1	1	1	1	1	1	1	1	1	1	1	1	1	1	1	1	1	1
31	C-IA-7011411-ØJ-Ø	CABLE CONSOLE (DD11-PK FOR L OR K BOX)	1	1	1	1	1	1	1	1	1	1	1	1	1	1	1	1	1	1	-	-	-	-	-	-	-	-	-	-	-	-	-	-	-	-
32	D-IA-7011992-0-0	CONSOLE POWER HARNESS (K BOX)	-	-	-	-	-	-	-	-	-	-	1	1	1	1	1	1	1	1	1	1	1	1	1	1	1	1	1	1	1	1	1	1	-	-
33	B-MD-7417628-0-0	BRACKET, BEZEL	-	-	-	-	-	-	-	-	-	-	2	2	2	2	2	2	2	2	2	2	2	2	2	2	2	2	2	2	2	2	2	2	-	-
34	B-MD-7417627-0-0	ADAPTER BRACKET, BEZEL	-	-	-	-	-	-	-	-	-	-	2	2	2	2	2	2	2	2	2	2	2	2	2	2	2	2	2	2	2	2	2	2	-	-
35	9006043-3	SCR. PHL. TRUSS HD #8 - 32 x 1.00	4	4	4	4	4	4	4	4	4	4	4	4	4	4	4	4	4	4	4	4	4	4	4	4	4	4	4	4	4	4	4	4	4	4
36	9008072	WASHER, EXTERNAL TOOTH #8	12	12	12	12	12	12	12	12	12	12	4	4	4	4	4	4	4	4	4	4	4	4	4	4	4	4	4	4	4	4	4	4	12	12
37	9006037-3	SCR. PHL. TRUSS HD #8 - 32 x .38	4	4	4	4	4	4	4	4	4	4	4	4	4	4	4	4	4	4	4	4	4	4	4	4	4	4	4	4	4	4	4	4	4	4
38	B-MD-7417882-0-0 NUT, PLATE *		-	-	-	-	-	-	-	-	-	-	2	2	2	2	2	2	2	2	2	2	2	2	2	2	2	2	2	2	2	2	2	2	-	-
39	B-MD-7417883-0-0	PLATE, SLIDE MOUNTING *	-	-	-	-	-	-	-	-	-	-	2	2	2	2	2	2	2	2	2	2	2	2	2	2	2	2	2	2	2	2	2	2	-	-
40	9009799	SCR. PHL.FILL HD # 8- 32 x .31	1	1	1	1	1	1	1	1	1	1																							1	1
41	9006634	WASHER, LOCK #8	-	-	-	-	-	-	-	-	-	-	4	4	4	4	4	4	4	4	4	4	4	4	4	4	4	4	4	4	4	4	4	4	-	-
42	9006070-2	SCR, PHL. FLAT HD. #10 - 32 x .31	-	-	-	-	-	-	-	-	-	-	8	8	8	8	8	8	8	8	8	8	8	8	8	8	8	8	8	8	8	8	8	8	-	-
43	9009771-03	CLAMP, CABLE	5	5	5	5	5	5	5	5	5	5	3	3	3	3	3	3	3	3	3	3	3	3	3	3	3	3	3	3	3	3	3	3	5	5
			BASIC 5.25										BASIC 5.25		BASIC 10.5																		BASIC 5.25	BASIC 5.25	BASIC 5.25

REVISIONS				
CHK	CHANGE NO.	REV.		
KT	1134A-00001	A	16 FEB 77	D. BARRY
	1134A-00002	B	9 MAR 77	G. POTTER
	1134A-00003	C	26 April 77	P. LORUSSO
KT	1134A-00004	D	13 May 77	D. BARRY
	1134A-00005	E	20 JULY 77	P. FORRECA
	1134A-00006	F	10 AUG 77	D. BARRY
	1134A-00007	H	19 DEC 77	B. BERNSTEIN
	1134A-00008	J	2-24-78	E. CROCKER J. SOFIE
	1134A-TW009	K	6 SEP 78	E. CROCKER

DRN. B. Blodgett	OCT 76	FIRST USED ON 1134A
CHK'D D. Healy	NOV 76	digital
ENG.	13 JAN 77	TITLE UNIT ASSY 1134A
PROJ. ENG.	13 JAN 77	
PROD.	13 JAN 77	
NEXT HIGHER ASSY. E-UA-1134A-Ø-Ø		SIZE C · CODE PL · NUMBER 1134A-Ø-Ø · REV. K
SCALE		
SHEET 1 OF 2		DIST.

DEC FORM NO. ORC 110 A

TW 1

THIS DRAWING AND SPECIFICATIONS, HEREIN ARE THE PROPERTY OF DIGITAL EQUIPMENT CORPORATION AND SHALL NOT BE REPRODUCED OR COPIED OR USED IN WHOLE OR IN PART AS THE BASIS FOR THE MANUFACTURE OR SALE OF ITEMS WITHOUT WRITTEN PERMISSION COPYRIGHT © , DIGITAL EQUIPMENT CORPORATION

ITEM NO.	DRAWING NO.	DESCRIPTION	1134A-DC	1134A-DD	1134A-HC	1134A-HD	1134A-LC	1134A-LD	1134A-MC	1134A-MD	1134A-JC	1134A-JD	1134A-DH	1134A-DJ	1134A-HH	1134A-HJ	1134A-LH	1134A-LJ	1134A-MH	1134A-MJ	1134A-DE	1134A-DF	1134A-HE	1134A-HF	1134A-LE	1134A-LF	1134A-ME	1134A-MF	1134A-JH	1134A-JJ	1134A-JE	1134A-JF	1134A-XX	1134A-XY	1134A-XX	1134A-YY
44	1211336-02	TAPE	-	-	-	-	-	-	-	-	-	-	A/R	◄																			► A/R	-	-	-
45	1212707	AIR FILTER BA11-L	1	1	1	1	1	1	1	1	1	1	-	-	-	-	-	-	-	-	-	-	-	-	-	-	-	-	-	-	-	-	-	-	1	1
46	1212392-02	AIR FILTER BA11-K	-	-	-	-	-	-	-	-	-	-	1	1	1	1	1	1	1	1	1	1	1	1	1	1	1	1	1	1	1	1	1	1	-	-
47	D-UA-H95Ø-PB-Ø	COVER 5 1/4" BEZEL	-	-	-	-	-	-	-	-	-	-	1	1	1	1	1	1	1	1	1	1	1	1	1	1	1	1	1	1	1	1	1	1	-	-
48	C-MD-7413659-0-0	SHIPPING BRACKET (BA11-K *)	-	-	-	-	-	-	-	-	-	-	1	1	1	1	1	1	1	1	1	1	1	1	1	1	1	1	1	1	1	1	1	1	-	-
49	1209224	LATCH MOLDING	-	-	-	-	-	-	-	-	-	-	2	2	2	2	2	2	2	2	2	2	2	2	2	2	2	2	2	2	2	2	2	2	-	-
50	A-DC-7409478-0-0	DECAL, PATENT	-	-	-	-	-	-	-	-	-	-	1	1	1	1	1	1	1	1	1	1	1	1	1	1	1	1	1	1	1	1	1	1	-	-
51	D-PS-1211825-01-0	SLIDE 3 POS TILT * NOTE 1	-	-	-	-	-	-	-	-	-	-	1pr	◄																			► 1PR	-	-
52																																				
53																																				
54	B-DC-7417820-0-0	DECAL. MODULE LAYOUT	1	1	1	1	1	1	1	1	1	1	1	1	1	1	1	1	1	1	1	1	1	1	1	1	1	1	1	1	1	1	1	1	1	1
55	9007880	TIE WRAP	2	2	2	2	2	2	2	2	2	2	2	2	2	2	2	2	2	2	2	2	2	2	2	2	2	2	2	2	2	2	2	2	2	2
56	1209340-00	CONNECTOR, DUMMY	-	-	-	-	-	-	-	-	-	-	1	1	-	-	1	1	-	-	1	1	-	-	1	1	-	-	-	-	-	-	1	1	-	-
57	B-DC-7414727-0-0	DECAL STICKER	-	-	-	-	-	-	-	-	-	-	1	1	1	1	1	1	1	1	1	1	1	1	1	1	1	1	1	1	1	1	1	1	-	-
58	9006660	WASH, FL .38 O.D. x .18 I.D. x .03	4	4	4	4	4	4	4	4	4	4	-	-	-	-	-	-	-	-	-	-	-	-	-	-	-	-	-	-	-	-	-	-	4	4
59	9006020-3	SCR, PHL TRUSS HD. #6 - 32 x .25	-	-	-	-	-	-	-	-	-	-	12	12	12	12	12	12	12	12	12	12	12	12	12	12	12	12	12	12	12	12	12	12	-	-
60	9006633	WASHER, LOCK #6	-	-	-	-	-	-	-	-	-	-	12	12	12	12	12	12	12	12	12	12	12	12	12	12	12	12	12	12	12	12	12	12	-	-
61	A-SP-3700134-0-0	CUSHION CONSOLIDATED LOAD ASSY	1	1	1	1	1	1	1	1	1	1	-	-	-	-	-	-	-	-	-	-	-	-	-	-	-	-	-	-	-	-	-	-	1	1
62	A-SP-3700235-0-0	INPLANT PACKAGING INSTRUCTIONS	-	-	-	-	-	-	-	-	-	-	1	1	1	1	1	1	1	1	1	1	1	1	1	1	1	1	1	1	1	1	1	1	-	-
63	A-SP-3700165-0-0	SKID LOAD PACKAGING INSTRUCTIONS	-	-	-	-	-	-	-	-	-	-	1	1	1	1	1	1	1	1	1	1	1	1	1	1	1	1	1	1	1	1	1	1	-	-
64	A-SP-3700169-0-0	CUSTOM CUSHIONED PACKAGING INSTRUCTIONS	-	-	-	-	-	-	-	-	-	-	1	1	1	1	1	1	1	1	1	1	1	1	1	1	1	1	1	1	1	1	1	1	-	-
65	A-SP-3700197-0-0	INPLANT PACKAGING INSTRUCTIONS	1	1	1	1	1	1	1	1	1	1	-	-	-	-	-	-	-	-	-	-	-	-	-	-	-	-	-	-	-	-	-	-	1	1
66	A-SP-3700061-0-0	CUSTOM CUSHIONED PACKAGING INSTRUCTIONS	1	1	1	1	1	1	1	1	1	1	-	-	-	-	-	-	-	-	-	-	-	-	-	-	-	-	-	-	-	-	-	-	1	1
67	9009599	SCR, PHL FLAT HD #10 - 32 x .50	-	-	-	-	-	-	-	-	-	-	6	6	6	6	6	6	6	6	6	6	6	6	6	6	6	6	6	6	6	6	6	6	-	-
68	9006020-2	SCR, PH FL HD #6 - 32 x .25	-	-	-	-	-	-	-	-	-	-	4	4	4	4	4	4	4	4	4	4	4	4	4	4	4	4	4	4	4	4	4	4	-	-
~~69~~	~~70114H-2J~~	~~CONSOLE CABLE (FOR BA11-KA BATT. BACK-UP)~~																																		
70	A-PS-3613210-0-0	DECAL, ELECTRICAL DATA	1	1	1	1	1	1	1	1	1	1	1	1	1	1	1	1	1	1	1	1	1	1	1	1	1	1	1	1	1	1	1	1	1	1
71	9006071-2	SCR. PH FLAT HD #10-32 x .38	-	-	-	-	-	-	-	-	-	-	4	4	4	4	4	4	4	4	4	4	4	4	4	4	4	4	4	4	4	4	4	4	-	-
72	9006073-03	SCR. PH TRUSS HD #10-32 x .50	-	-	-	-	-	-	-	-	-	-	4	4	4	4	4	4	4	4	4	4	4	4	4	4	4	4	4	4	4	4	4	4	-	-
73	9006664	WASHER, FLAT #10	-	-	-	-	-	-	-	-	-	-	2	2	2	2	2	2	2	2	2	2	2	2	2	2	2	2	2	2	2	2	2	2	-	-
74	B-MD-7418879-0-0	STRIP, BEARING	2	2	2	2	2	2	2	2	2	2	-	-	-	-	-	-	-	-	-	-	-	-	-	-	-	-	-	-	-	-	-	-	2	2
75	9006039-03	SCREW, PHL TRUSS HD #8-32 x .50	4	4	4	4	4	4	4	4	4	4	-	-	-	-	-	-	-	-	-	-	-	-	-	-	-	-	-	-	-	-	-	-	4	4
76	D-UA-MM11-YP-Ø	MEMORY, CORE 32K PARITY	-	-	-	-	-	-	-	-	1	1	-	-	-	-	-	-	-	-	-	-	-	-	-	-	-	-	1	1	1	1	-	-	-	-
77	D-CS-M9312-0-1	TERM. BOOT STRAP (M9312) NOTE 2	1	1	1	1	1	1	1	1	1	1	1	1	1	1	1	1	1	1	1	1	1	1	1	1	1	1	1	1	1	1	1	1	1	1
78	E-MD-7414962-0-0	BRKT, FILTER SUPPORT	2	2	2	2	2	2	2	2	2	2	-	-	-	-	-	-	-	-	-	-	-	-	-	-	-	-	-	-	-	-	-	-	2	2
79	E-MD-7415599-0-0	BEZEL 11/04	1	1	1	1	1	1	1	1	1	1	1	1	1	1	1	1	1	1	1	1	1	1	1	1	1	1	1	1	1	1	1	1	1	1
80	D-MD-7415656-0-0	BEZEL, COVER PROTECTIVE	1	1	1	1	1	1	1	1	1	1	1	1	1	1	1	1	1	1	1	1	1	1	1	1	1	1	1	1	1	1	1	1	1	1
			BASIC 5.25										BASIC 5.25	BASIC 10.5																			BASIC 10.5	BASIC 5.25	BASIC 5.25	

* installed at F. A. & T.
** cable to be installed at F.A. & T.

NOTE 1: 1211825-02-0 May be used in place of -01.
2: Either M9312 or M9301 may be used but not both.
3: M930 MAY BE USED IN PLACE OF M9302 IF THE LAST SYSTEM UNIT SLOT REQUIRES THE OLD PADDLE BD. PWR. CONN. HARNESS.

REVISIONS	CHANGE NO.	REV.

DRN. B. Blodgett	OCT 76	FIRST USED ON 1134A
CHK'D D. Healy	NOV 76	digital
ENG.	13-JAN-77	TITLE UNIT ASSY 1134A
PROJ. ENG.	13 Jan 77	
PROD.	17 Ja 77	
NEXT HIGHER ASSY. E-UA-1134A-Ø-Ø		SIZE C · CODE PL · NUMBER 1134A-Ø-Ø · REV. K
SCALE		
SHEET 2 OF 2		DIST.

DEC-FORM NO. DRC 110

TW 1

BLANK

digital EQUIPMENT CORPORATION MAYNARD MASSACHUSETTS

DRAWING DIRECTORY

"THIS DRAWING AND SPECIFICATIONS, HEREIN, ARE THE PROPERTY OF DIGITAL EQUIPMENT CORPORATION AND SHALL NOT BE REPRODUCED OR COPIED OR USED IN WHOLE OR IN PART AS THE BASIS FOR THE MANUFACTURE OR SALE OF ITEMS WITHOUT WRITTEN PERMISSION. COPYRIGHT © 1976 , DIGITAL EQUIPMENT CORPORATION"

CUSTOMER PRINT SET INDEX

SEQUENCE

SEQUENCE

THIS IS PRINT SET

NOTE: 1. EITHER M9312 OR M9301 MAY BE USED BUT NOT BOTH.

UNIT VARIATIONS

VAR	TITLE	PRINT SET
1134A-DC	KD11-EA, MS11-JP, BA11-LM, M7850	
	M9312 , 115V	
1134A-DD	KD11-EA, MS11-JP, BA11-LN, M7850	
	M9312 230V	
1134A-HC	KD11-EA, MM11-DP, BA11-LK, M7850	
	M9312 , 115V	
1134A-HD	KD11-EA, MM11-DP, BA11-LL, M7850	
	M9312 230V	
1134A-LC	1134A-DC & MS11-JP, 115V	
1134A-LD	1134A-DD & MS11-JP, 230V	
1134A-MC	1134A-HC & MM11-DP, 115V	
1134A-MD	1134A-HD & MM11-DP, 230V	
1134A-LH	1134A-DH & MS11-JP, 115V	
1134A-LJ	1134A-DJ & MS11-JP, 230V	
1134A-DH	KD11-EA, MS11-JP, BA11-KA, M7850	
	M9312- 115V	
1134A-DJ	KD11-EA, MS11-JP, BA11-KA, M7850	
	M9312- , 230V	
1134A-MH	1134A-HH & MM11-DP, 115V	
1134A-MJ	1134A-HJ & MM11-DP, 230V	
1134A-HH	KD11-EA, MM11-DP, BA11-KA, M7850	
	M9312 115V	
1134A-HJ	KD11-EA, MM11-DP, BA11-KA, M7850	
	M9312 , 230V	
1134A-LE	1134A-DE, & MS11-JP, 115V	
1134A-LF	1134A-DF & MS11-JP, 230V	
1134A-DE	KD11-EA, MS11-JP, BA11-KA, M7850	
	M9312 DL11-WA, 115V	
1134A-DF	KD11-EA, MS11-JP, BA11-KA, M7850	
	M9312 DL11-WA, 230V	

5.25" BOX

10.50" BOX

REVISIONS		
DATE	CHG. NO	REV
4-77	1134A-3	A
7-77	1134A-5	B
8-77	1134A-6	C
11-77	1134A-7	D
2 78	1134A-8	E

USED ON OPTION/MODEL	
SHEET 1 OF 5	

DRN. D. HEALY	DATE NOV 76	TITLE UNIT ASSY 1134A	
CHK'D. D. HEALY	DATE NOV 76		
PROJ ENG. David Mitta	DATE 13 JAN 77		
PROD. J. Stanley	DATE 13 JAN 77	SIZE B / CODE DD / NUMBER 1134A-0	REV E
~~FIELD SERV.~~	~~DATE~~	DIST	

EN-01062 1A-16-R972-(325)

DRB 106

digital EQUIPMENT CORPORATION MAYNARD MASSACHUSETTS

DRAWING DIRECTORY

"THIS DRAWING AND SPECIFICATIONS, HEREIN, ARE THE PROPERTY OF DIGITAL EQUIPMENT CORPORATION AND SHALL NOT BE REPRODUCED OR COPIED OR USED IN WHOLE OR IN PART AS THE BASIS FOR THE MANUFACTURE OR SALE OF ITEMS WITHOUT WRITTEN PERMISSION. COPYRIGHT © 1976 , DIGITAL EQUIPMENT CORPORATION"

CUSTOMER PRINT SET INDEX

SEQUENCE SEQUENCE

THIS IS PRINT SET

	UNIT VARIATIONS		PRINT SET
	VAR	TITLE	
10.50" BOX	1134A-ME	1134A-HE & MM11-DP 115V	
	1134A-MF	1134A-HF, MM11-DP 23ØV	
	1134A-HE	KD11-EA, MM11-DP BA11-KA, M785Ø	
		M9312 DL11-WA, 115V	
	1134A-HF	KD11-EA. MM11-DP, BA11-KA, M785Ø	
		M9312 DL11-WA 23ØV	
	1134A-JH	KD11-EA, MM11-YP, BA11-KA,	
		M785Ø, M9312 115V	
	1134A-JJ	KD11-EA, MM11-YP, BA11-KA,	
		M785Ø. M9312 , 23ØV	
	1134A-JE	1134A-JH & DL11-WA, KY11-LB,	
		115V	
	1134A-JF	1134A-JJ & DL11-WA, KY11-LB	
		23ØV	
5.25" BOX	1134A-JC	KD11-EA, MM11-YP, BA11-LK,	
		M785Ø, M9312 , 115V	
	1134A-JD	KD11-EA, MM11-YP, BA11-LL,	
		M785Ø, M9312 , 23ØV	

REVISIONS		
REV		
CHG. NO		
DATE		

USED ON OPTION/MODEL	
SHEET 2	OF 5

DRN. D. HEALY	DATE NOV 76	TITLE UNIT ASSY 1134A
CHK'D. D. HEALY	DATE NOV 76	
PROJ ENG. [illegible]	DATE 13 JAN 77	
PROD. [illegible]	DATE 13 JAN 77	SIZE B · CODE DD · NUMBER 1134A-Ø · REV E
FIELD SERV.	DATE	DIST

EN 01062-1A-16 R972-(325)

DRB 106

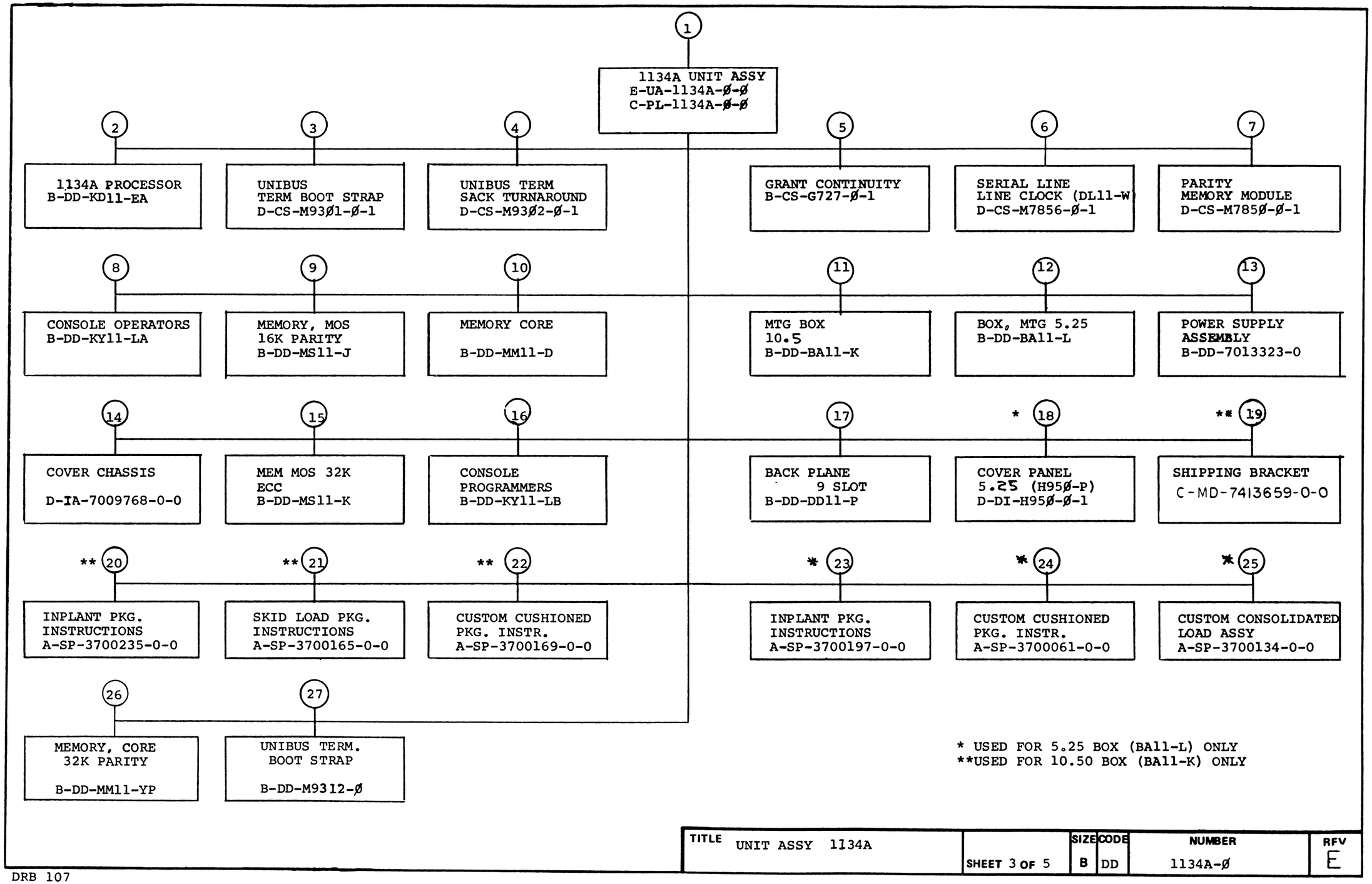

* USED FOR 5.25 BOX (BA11-L) ONLY
**USED FOR 10.50 BOX (BA11-K) ONLY

TITLE	SHEET	SIZE	CODE	NUMBER	REV
UNIT ASSY 1134A	3 OF 5	B	DD	1134A-Ø	E

DRB 107
EN-1062A-03-16-R1175-(325)

FIND NO.	DRAWING NO.	DESCRIPTION	TYPE
1	B-TC-1134A-Ø-1	1134A (Field Maintenance Print Set)	-
	MPØØ19Ø	1134A (Print Set Order Number)	-
	D-UA-1134A-Ø-Ø	1134A Unit Assy	E/M
	C-PL-1134A-Ø-Ø	1134A Unit Assy (PL)	E/M
	A-DC-7409478-Ø-Ø	Decal Patent	M
	B-DC-7414727-0-0	Decal, Sticker	M
	C-IA-7013752-0-0	Cable, Jumper (BA11-L)	E/M
	C-IA-7011413-0-0	Cable, External Boot M93Ø1	E/M
	B-DC-7417820-0-0	Decal, Module Layout	M
	B-MU-DD11-P-2	Module Utilization (DD11-P)	E/M
	C-IA-7011411-0-0	Cable, Console (DD11-PK for L or K Box)	E/M
	D-IA-7011992-0-0	Console, Power Harness (K Box)	E/M
	A-PL-1134A-Ø-4	1134A Shipping List	E/M
	B-MD-7417628-0-0	Bracket, Bezel	M
	B-MD-7417627-0-0	Adapter Bracket, Bezel	M
	B-MD-7417882-0-0	Nut Plate	M
	B-MD-7417883-0-0	Plate, Slide Mounting	M
	A-PS-3613210-0-0	Decal Electrical Data	M
2	B-DD-KD11-EA	1134A Processor	E/M
	B-PL-M8265-0-8	ROM LISTING	
	B-PL-M8266-0-8	ROM LISTING	
3	D-CS-M93Ø1-Y-1	Unibus Term Boot Strap	E/M
4	D-CS-M93Ø2-Ø-1	Unibus Term Sack Turn Around	E/M
5	B-CS-G727-Ø-1	Grant Continuity	E/M
6	D-CS-M7856-Ø-1	Serial Line/ Line Clock (DL11-W)	E/M
7	D-CS-M785Ø-Ø-1	Parity Memory Module	E/M
8	B-DD-KY11-LA	Console, Operators	E/M
9	B-DD-MS11-J	Memory Mos 16K Parity (M7847)	E/M
10	B-DD-MM11-D	Memory Core 16K Parity	E/M
11	B-DD-BA11-K	Mtg. Box 10.50	E/M
12	B-DD-BA11-L	Mtg. Box 5.25	E/M
13	B-DD-7013323-0	Power Supply Assembly	E/M
14	D-IA-7009768-0-0	Cover, Chassis	M
15	B-DD-MS11-K-Ø	Memory Mos 32K ECC (M7984)	E/M
16	B-DD-KY11-LB	Console, Programmers	E/M

TYPE: E ELECTRICAL
M MECHANICAL
E/M ELECTRO/MECHANICAL

digital

TITLE	SHEET	SIZE	CODE	NUMBER	REV
UNIT ASSY 1134A	4 OF 5	B	DD	1134A-Ø	E

DRB 108A

EN-01062-2C-16-R376-(325)

FIND NO.	DRAWING NO.	DESCRIPTION	TYPE
17	B-DD-DD11-P	Backplane 9 Slot for L & K Boxes	M/E
18	D-DI-H95Ø-P-Ø	Dwg. Index List H95Ø	M
	D-UA-H95Ø-P-Ø	Cover 5-1/4 Bezel	M
19	C-MD-7413659-0-0	Shipping Bracket (BA11-K)	M
20	A-SP-37ØØ235-Ø-Ø	Inplant Pkg. Instructions	M
	A-PS-99Ø565Ø-Ø-Ø	Regular Slotted Carton	M
	A-PS-99Ø5889-Ø-Ø	Bezel Protector	M
	A-PS-99Ø5644-Ø-Ø	Rear Pad	M
	A-PS-99Ø5323-Ø-Ø	Laminated Saddle	M
	A-PS-99Ø5129-Ø-Ø	Poly Bag	M
21	A-SP-37ØØ165-Ø-Ø	Skid Load Pkg. Instructions	M
	A-PS-121Ø568-Ø1-Ø	Cushioned Skid	M
	A-PS-99Ø5445-Ø-Ø	Half Overlap Slotted Carton (Top)	M
	A-PS-99Ø5419-Ø-Ø	Flanged Tube (Bottom)	M
22	A-SP-37ØØ169-Ø-Ø	Cust. Cushioned Pkg. Instructions	M
	A-PS-99Ø5645-Ø-Ø	Full Telescope	M
	A-PS-99Ø5642-Ø-Ø	Foam, Pad	M
	A-PS-99Ø5643-Ø-Ø	Foam/Corrugated Side Wall Assy	M
23	A-SP-37ØØ197-Ø-Ø	Inplant Pkg. Instructions	M
	A-PS-99Ø5418-Ø-Ø	Regular Slotted Carton	M
	A-PS-99Ø5754-Ø-Ø	Bezel Protector	M
	A-PS-99Ø5755-Ø-Ø	Laminated Saddle	M
	A-PS-99Ø5129-Ø-Ø	Poly Bag	M
	A-PS-99Ø5729-Ø-Ø	Tape	M

FIND NO.	DRAWING NO.	DESCRIPTION	TYPE
		Custom Cushioned Pkg. Instr.	M
24	A-SP-37ØØØ61-Ø-Ø		
25	A-SP-37ØØ134-Ø-Ø	Cushion Consolidated Load Assy.	M
26	B-DD-MM11-YP	Memory, Core 32K Parity	
27	B-DD-M9312-0	Unibus Term. Boot Strap	E/M

TYPE: E ELECTRICAL
M MECHANICAL
E/M ELECTRO/MECHANICAL

digital

TITLE	SHEET	SIZE	CODE	NUMBER	REV
UNIT ASSY 1134A	SHEET 5 OF 5	B	DD	1134A-Ø	E

EN-01062-2C-16-R376-(325)

DRB 108A

BLANK

"THE MATERIAL HEREIN IS FOR INFORMATION PURPOSES ONLY AND IS SUBJECT TO CHANGE WITHOUT NOTICE. DIGITAL EQUIPMENT CORPORATION ASSUMES NO RESPONSIBILITY FOR ANY ERRORS WHICH MAY APPEAR HEREIN."

FIELD MAINTENANCE PRINT SET

"THIS DRAWING AND SPECIFICATIONS, HEREIN, ARE THE PROPERTY OF DIGITAL EQUIPMENT CORPORATION AND SHALL NOT BE REPRODUCED OR COPIED OR USED IN WHOLE OR IN PART AS THE BASIS FOR THE MANUFACTURE OR SALE OF ITEMS WITHOUT WRITTEN PERMISSION. COPYRIGHT © 1976 , DIGITAL EQUIPMENT CORPORATION."

TABLE OF CONTENTS

B-TC-KD11-EA-3	1134A PROCESSOR (TC)
D-BD-KD11-EA-2	BLOCK DIAGRAM (KD11-EA)
D-FD-KD11-EA-1	FLOW DIAGRAM (KD11-EA)
D-UA-M8266-Ø-Ø	CONTROL
B-PL-M8266-Ø-Ø	CONTROL (PL)
D-CS-M8266-Ø-1	CONTROL (CS)
D-UA-M8265-Ø-Ø	DATA PATH
B-PL-M8265-Ø-Ø	DATA PATH (PL)
D-CS-M8265-Ø-1	DATA PATH (CS)

UNIT VARIATIONS COVERED BY THIS PRINT SET
KD11-EA

KD11-EA
Field Maintenance Print Set

Digital Equipment Corporation

PRINT SET ORDER NO.
MPØØ192

REVISIONS	
REV.	
CHG. NO.	
DATE	

USED ON OPTION/MODEL	
1134A	

SHEET I OF 1

DRN. D. HEALY	DATE OCT 76	TITLE: 1134A PROCESSOR	digital
CHK'D D. HEALY	DATE OCT 76		
PROJ. ENG. J W Mitchell	DATE 12-20-76	SIZE B	CODE TC
FIELD SERV. Roy Kwan	DATE 12-20-76	NUMBER KD11-EA-3	REV.
		DIST.	

EN-01124-0-1-0-0-1-2-3-2-7

DRB 124

BLANK

"THIS DRAWING AND SPECIFICATIONS, HEREIN, ARE THE PROPERTY OF DIGITAL EQUIPMENT CORPORATION AND SHALL NOT BE REPRODUCED OR COPIED OR USED IN WHOLE OR IN PART AS THE BASIS FOR THE MANUFACTURE OR SALE OF ITEMS WITHOUT WRITTEN PERMISSION. COPYRIGHT © 1976, DIGITAL EQUIPMENT CORPORATION"

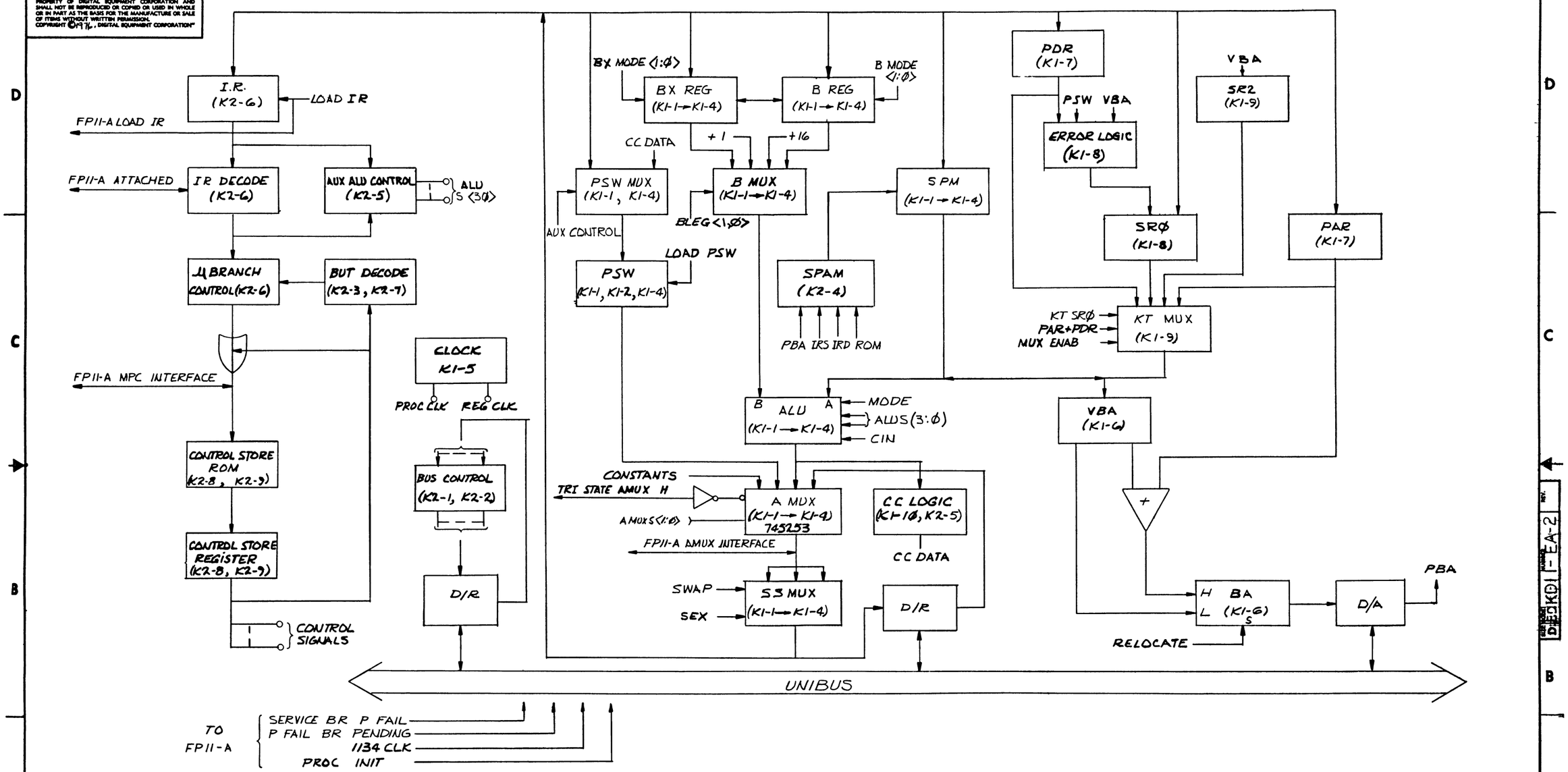

DRN.		FIRST USED ON
CHK'D		digital
ENG.		TITLE BLOCK DIAGRAM KD11-EA
PROJ ENG		
PROD		
NEXT HIGHER ASSY.	B-DD-KD11-EA	SIZE D · CODE BD · NUMBER KD11-EA-2 · REV.
SCALE		
SHEET 1 OF 1		DIST.

REVISIONS: REV. · CHANGE NO. · CHK.

"THIS DRAWING AND SPECIFICATIONS, HEREIN, ARE THE PROPERTY OF DIGITAL EQUIPMENT CORPORATION AND SHALL NOT BE REPRODUCED OR COPIED OR USED IN WHOLE OR IN PART AS THE BASIS FOR THE MANUFACTURE OR SALE OF ITEMS WITHOUT WRITTEN PERMISSION.
COPYRIGHT © 1975 DIGITAL EQUIPMENT CORPORATION"

KDII-B CONTROL WORD

	E11Ø	E1Ø9	E1Ø8	E1Ø7	E1Ø6	E99	E97	E98	E1ØØ	E1Ø4	E1Ø3	E1Ø5	
	Ø 1 2 3	4 5 6 7	8 9 1Ø 11	12 13 14 15	16 17 18 19	2Ø 21 22 23	24 25 26 27	28 29 3Ø 31	32 33 34 35	36 37 38 39	4Ø 41 42 43	44 45 46 47	← INTEGRATED CIRCUIT DESIGNATION
	x x x x	x x x x x	Ø Ø Ø	Ø Ø Ø	Ø 1 Ø	Ø Ø 1 Ø 1	Ø Ø Ø Ø	Ø Ø Ø 1	Ø Ø Ø Ø	Ø Ø 1 1	1 1 Ø Ø	Ø Ø Ø Ø	← NORMAL CONDITION OF EACH BIT

- ROM SPA H (R17)
- FORCE KERNEL H (NOP)
- BUT SERVICE H (NOP)
- PREVIOUS MODE L (NOP)
- FORCE RS V1 L (NOP)
- SPA DST SEL H (RBA)
- SPA SRC SEL H (ROM)
- BUT BITS (NOP)
- AMUX CONTROL H (ALU)
- SSMUX CONTROL H (STRT)
- B,BX,OVX,DBE CONTROL H (HOLD)
- ALU,BLEG CONTROL H (A)
- AUX CONTROL H (NOP)
- LONGCYCLE L (SHORT)
- LOAD BAR (NOP)
- ENAB MAINT H (NOP)
- BUS CONTROL H (DATI)
- DATA TRAN H (NO TRANS)
- MISCELLANEOUS CONTROL H (NOP)
- NEXT MPC ADDRESS H (NO DEFALT)

NOTE:
THIS SET OF FLOW DIAGRAMS ONLY DOCUMENTS MICROWORD LOCATIONS FROM ØØØØ TO Ø51 (DECIMAL). MICROWORD LOCATIONS FROM Ø512 TO 1Ø23 (DECIMAL) ARE DOCUMENTED AS PART OF THE FP11-A FLOW DIAGRAMS (SEE D-FD-FP11-A-1)

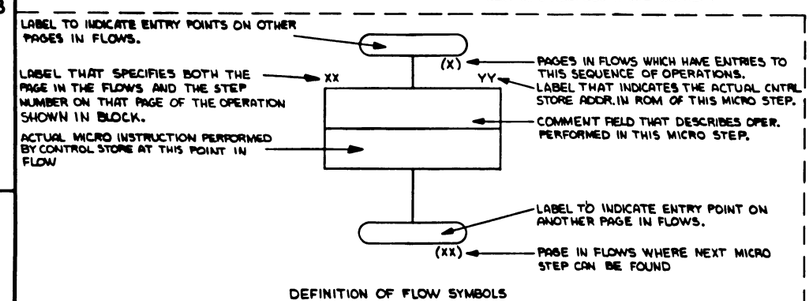

DEFINITION OF FLOW SYMBOLS

MISC. CONTROL

OPERATION	MISC 9	Ø	11
NOP	Ø	Ø	Ø
LOAD IR	Ø	Ø	1
LOAD PSW	Ø	1	Ø
LOAD CC	Ø	1	1
BUT DEST	1	Ø	Ø
ENAB STOV	1	Ø	1
LOAD CNT	1	1	Ø
COUNT	1	1	1

BUS CONTROL

OPERATION	CNTRL 13	14
DATI	Ø	Ø
DATIP	Ø	1
DATO	1	Ø
DATOB	1	1

ALU/BLEG CONTROL

ALU FUNCTION	ALU/BLEG CNTRL 19	2Ø	21	22	23
ZERO	Ø	Ø	Ø	Ø	Ø
ABAR	Ø	Ø	Ø	Ø	1
A+1	Ø	Ø	Ø	1	Ø
A-1	Ø	Ø	Ø	1	1
A-B	Ø	Ø	1	Ø	Ø
A	Ø	Ø	1	Ø	1
B	Ø	Ø	1	1	Ø
ONE BAR	Ø	Ø	1	1	1
A+B	Ø	1	Ø	Ø	Ø
A∨B	Ø	1	Ø	Ø	1
ABAR·B	Ø	1	Ø	1	Ø
AVB	Ø	1	Ø	1	1
A⊕B	Ø	1	1	Ø	Ø
A BBAR	Ø	1	1	Ø	1
K16	Ø	1	1	1	Ø
A+B+1	1	Ø	Ø	Ø	Ø
A+BX	1	Ø	Ø	Ø	1
A-BX	1	Ø	Ø	1	Ø
A+BX+1	1	Ø	Ø	1	1
A+Z	1	Ø	1	Ø	Ø
A-Z	1	Ø	1	Ø	1
A+A	1	Ø	1	1	Ø
BX	1	Ø	1	1	1
BBAR	1	1	Ø	Ø	Ø
BX BAR	1	1	Ø	Ø	1
A+A+1	1	1	Ø	1	Ø

B,BX,OVX,DBE CONTROL

OPERATION	B,BX CNTRL 24	25	26	27
HOLD	Ø	Ø	Ø	Ø
LOAD B	Ø	Ø	Ø	1
LOAD BX	Ø	Ø	1	Ø
SL(BX-Ø),LDB	Ø	Ø	1	1
SL(BX-COUT),LDB	Ø	1	Ø	Ø
SL(BX-1),LDB	Ø	1	Ø	1
SL (B-Ø)	Ø	1	1	Ø
SL(B-Ø),LDBX	Ø	1	1	1
SL (B-BX15)	1	Ø	Ø	Ø
SL (BX-Ø)	1	Ø	Ø	1
SL (BX-1)	1	Ø	1	Ø
SL(BX-OVX)	1	Ø	1	1
SL(BX-COUT)	1	1	Ø	Ø
SL (B-BX-Ø)	1	1	Ø	1
SR (B15-B-BX)	1	1	1	Ø
ENAB DBE	1	1	1	1

AMUX CONTROL

SELECT	AMUX 3Ø	31
PSW	Ø	Ø
ALU	Ø	1
VECT	1	Ø
UBUS	1	1

SS MUX CONTROL

SELECT	SS 28	29
STRT	Ø	Ø
SEX	Ø	1
SWAB	1	Ø
EITPAL	1	1

BUT BITS

BRANCH COND.	BITS 32	33	34	35
NOP	Ø	Ø	Ø	Ø
N BIT	Ø	Ø	Ø	1
Z BIT	Ø	Ø	1	Ø
CØ5	Ø	Ø	1	1
IR9	Ø	1	Ø	Ø
BXØØ	Ø	1	Ø	1
BXØ1	Ø	1	1	Ø
COUT	Ø	1	1	1
SP15	1	Ø	Ø	Ø
NBIT + Z BIT	1	Ø	Ø	1
BXØØ + SP15	1	Ø	1	Ø
BXØ1 + BXØØ	1	Ø	1	1
CØ5 + BXØ1 + BXØØ	1	1	Ø	Ø
NBIT + CØ5	1	1	Ø	1
BXØØ + CØ5	1	1	1	Ø
ALL	1	1	1	1

SPA SRC SEL

FIELD SEL.	SPA SRC SEL 36	37
ROM	Ø	Ø
R5	Ø	1
RD	1	Ø
RBA	1	1

SPA DST SEL

FIELD SEL.	SPA DST SEL 38	39
ROM	Ø	Ø
R5	Ø	1
RD	1	Ø
RBA	1	1

ROM SPA LINES

REG. SELECTED	ROM SPA 44	45	46	47
R5	1	Ø	1	Ø
R6 (SP)	1	Ø	Ø	1
R7 (PC)	1	Ø	Ø	Ø
R1Ø	Ø	1	1	1
R11	Ø	1	1	Ø
R12	Ø	1	Ø	1
R13	Ø	1	Ø	Ø
R14	Ø	Ø	1	1
R15	Ø	Ø	1	Ø
R16	Ø	Ø	Ø	1
R17	Ø	Ø	Ø	Ø

A "1" IN THE TABLES SHOWN INDICATES A LOGIC "1" ROM OUTPUT BETWEEN +2.4 VOLTS AND +5 Ø VOLTS.
A "Ø" IN THE TABLES SHOWN INDICATES A LOGIC "Ø" ROM OUTPUT BETWEEN Ø.Ø VOLTS AND +0.4 VOLTS.
NOTE THAT ALL LEVELS SHOWN REPRESENT ACTUAL CONTROL STORE ROM OUTPUTS.

FIRST USED ON OPTION/MODEL	QTY.	DESCRIPTION	PART NO.	ITEM NO.
1134A		PARTS LIST		

DIMENSIONAL TOLERANCE
DIMENSIONS ARE MILLIMETERS / INCHES
UNLESS OTHERWISE SPECIFIED

MILLIMETERS	INCHES	ANGLES
X.XX = ±0.10	.XXX = ±.005	±0° 30'
X.X = ±0.5	.XX = ±.02	
X = ±2	.X = ±.1	

THIRD ANGLE PROJECTION
REMOVE BURRS AND BREAK SHARP CORNERS SURFACE QUALITY ✓
MATERIAL
FINISH

		DATE
DRN	B. Rodgers	18 OCT 74
CHK'D	D. Healy	24 OCT 74
ENG		3/26/75
PROJ. ENG.	L. MITCHELL	3/26/76
PROD	R. Ring	6/26/76

NEXT HIGHER ASSY. B-DD-KDII-EA
SCALE
SHEET 1 OF 26

digital

TITLE
KDII-EA FLOW DIAGRAMS

SIZE	CODE	NUMBER	REV.
D	FD	KDII-EA-1	

DIST

REVISIONS: REV | CHANGE NO. | CHK

"THIS DRAWING AND SPECIFICATIONS, HEREIN ARE THE PROPERTY OF DIGITAL EQUIPMENT CORPORATION AND SHALL NOT BE REPRODUCED OR COPIED OR USED IN WHOLE OR IN PART AS THE BASIS FOR THE MANUFACTURE OR SALE OF ITEMS WITHOUT WRITTEN PERMISSION
COPYRIGHT © 1975 DIGITAL EQUIPMENT CORPORATION"

MOV(B) = MOV OR BYTE
DOP(B) = DOUBLE OPERAND (WORD OF BYTE)
SOP(B) = SINGLE OPERAND (WORD OF BYTE)
MOD = MODIFYING INSTRUCTION
NON MOD = NON-MODIFYING INSTRUCTION
SMØ = SOURCE MODE (IR[8-6]) = Ø
DMØ = DEST MODE (IR[2-Ø]) = Ø

NOTE: SERVICE ALWAYS EXECUTED BEFORE FETCHING NEXT INSTRUCTION.
VECTOR ALWAYS LOADED, ONLY USED WHEN TRAP SEQUENCE ENTERED.

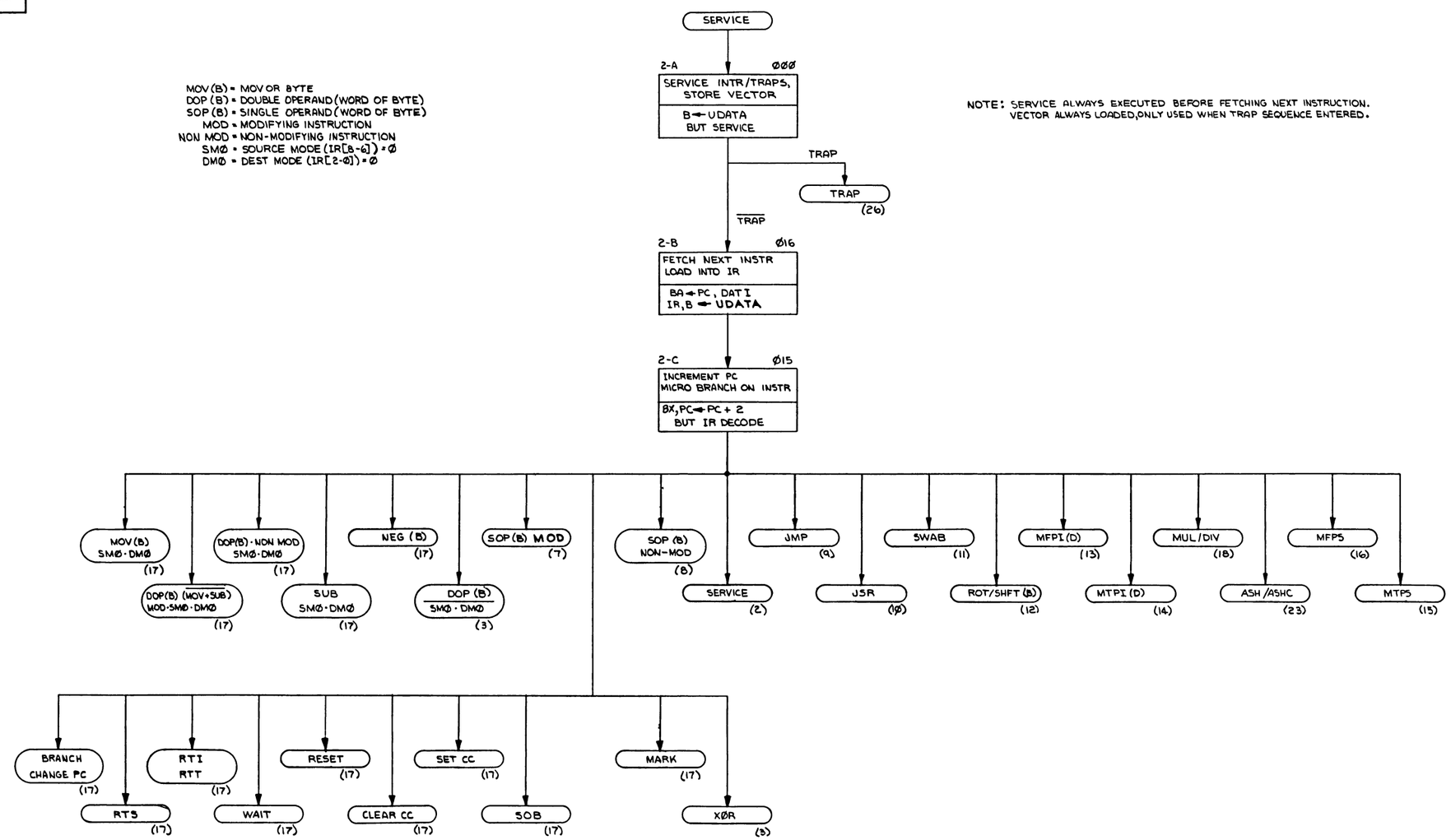

REVISIONS		
CHK	CHANGE NO	REV

DEC FORM NO DRD 138

TITLE	SIZE	CODE	NUMBER	REV.
KDII-EA FLOW DIAGRAMS	D	FD	KDII-EA-1	
SCALE —	SHEET 2 OF 26	DIST		

"THIS DRAWING AND SPECIFICATIONS HEREIN ARE THE PROPERTY OF DIGITAL EQUIPMENT CORPORATION AND SHALL NOT BE REPRODUCED OR COPIED OR USED IN WHOLE OR IN PART AS THE BASIS FOR THE MANUFACTURE OR SALE OF ITEMS WITHOUT WRITTEN PERMISSION
COPYRIGHT © 1975 DIGITAL EQUIPMENT CORPORATION"

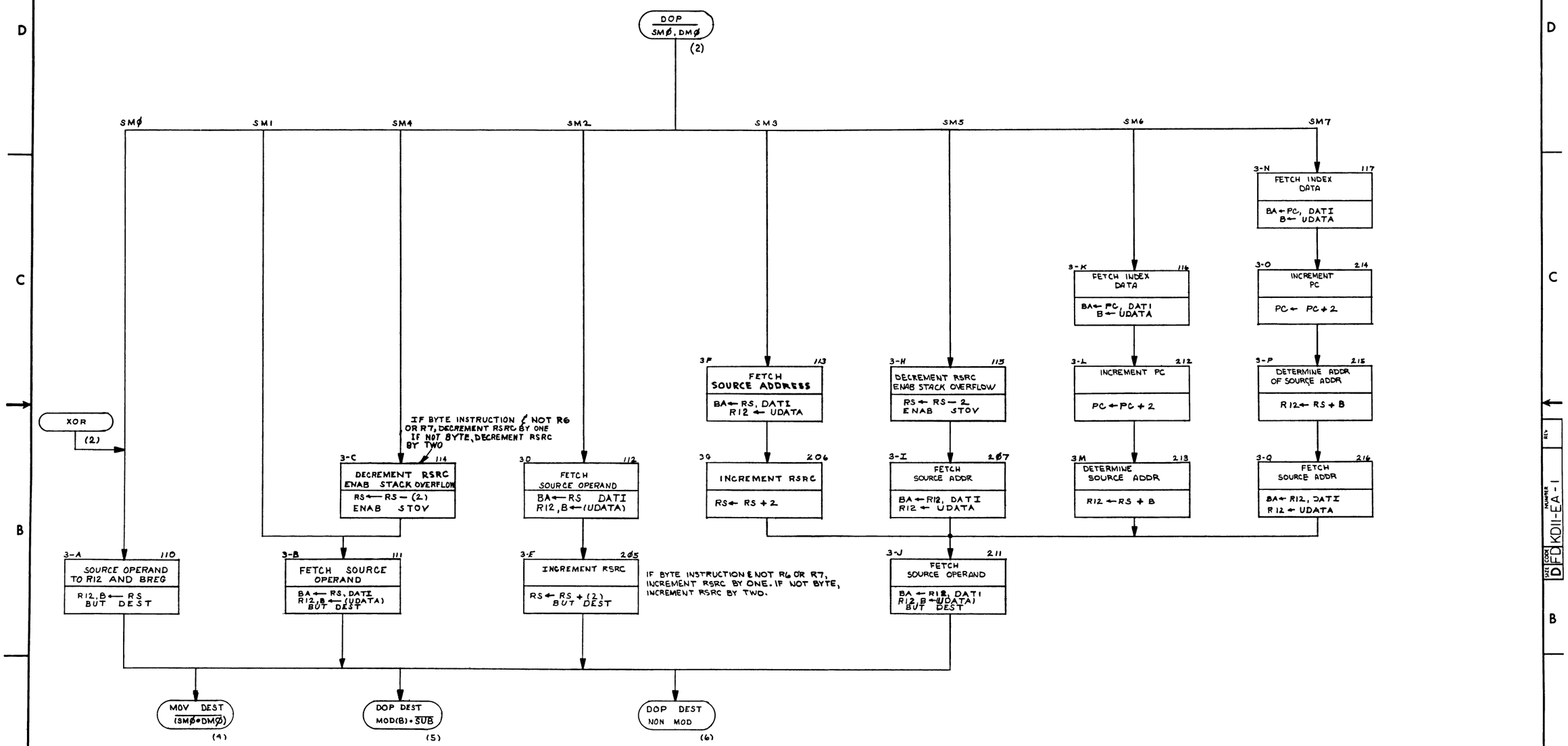

REVISIONS		
CHK	CHANGE NO	REV

TITLE	SIZE	CODE	NUMBER	REV
KDI1-EA FLOW DIAGRAMS	D	FD	KDI1-EA-1	
SCALE —	SHEET 3 OF 26	DIST		

DEC FORM NO DRD 138

"THIS DRAWING AND SPECIFICATIONS, HEREIN ARE THE PROPERTY OF DIGITAL EQUIPMENT CORPORATION AND SHALL NOT BE REPRODUCED OR COPIED OR USED IN WHOLE OR IN PART AS THE BASIS FOR THE MANUFACTURE OR SALE OF ITEMS WITHOUT WRITTEN PERMISSION COPYRIGHT © 1975 DIGITAL EQUIPMENT CORPORATION"

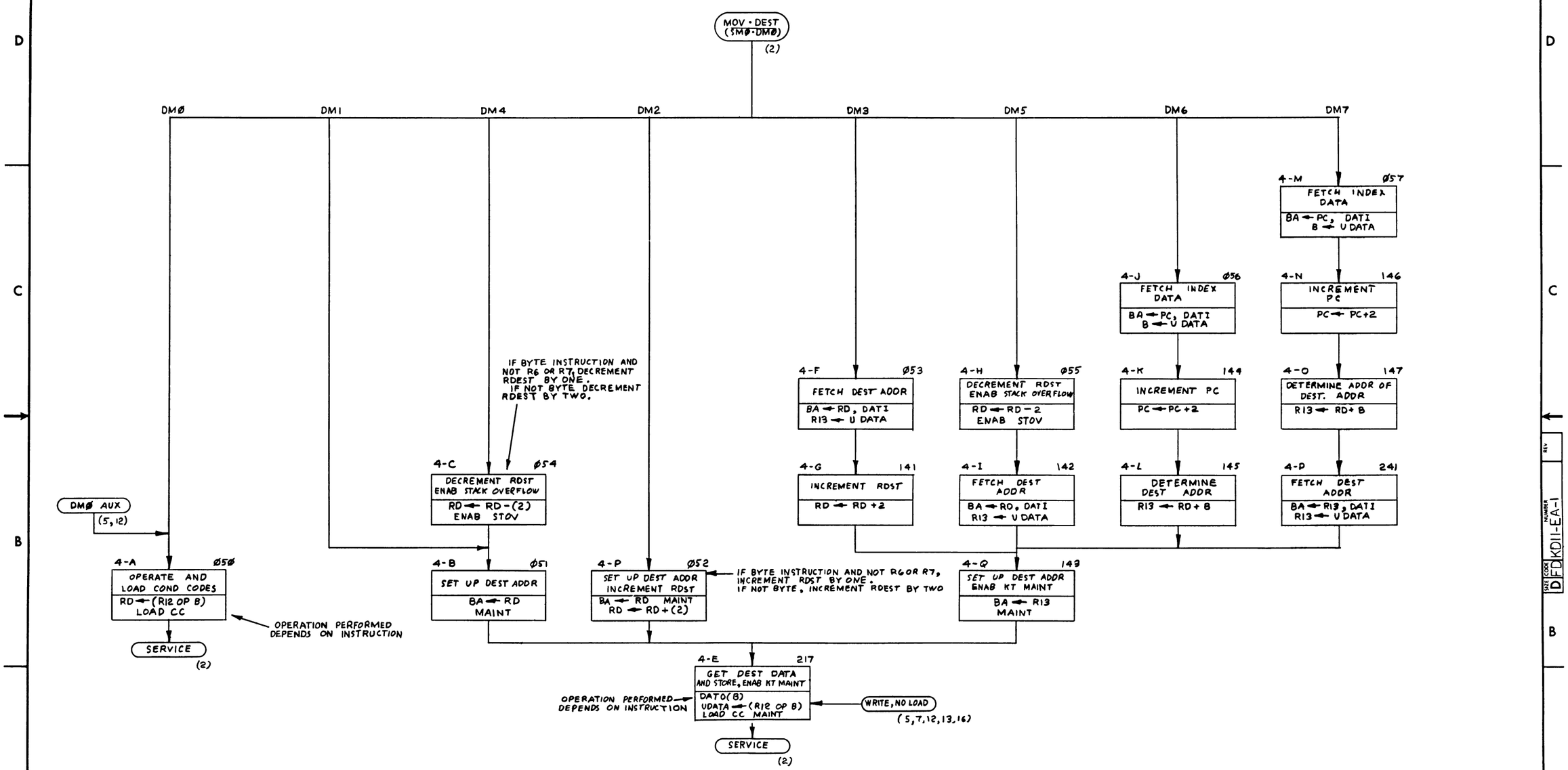

REVISIONS		
CHK	CHANGE NO	REV

TITLE	SIZE	CODE	NUMBER	REV.
KDI HEA FLOW DIAGRAMS	D	FD	KDII-EA-1	
SCALE — / —	SHEET 4 OF 26	DIST		

DEC FORM NO DRD 138

"THIS DRAWING AND SPECIFICATIONS, HEREIN ARE THE PROPERTY OF DIGITAL EQUIPMENT CORPORATION AND SHALL NOT BE REPRODUCED OR COPIED OR USED IN WHOLE OR IN PART AS THE BASIS FOR THE MANUFACTURE OR SALE OF ITEMS WITHOUT WRITTEN PERMISSION. COPYRIGHT © 1975 DIGITAL EQUIPMENT CORPORATION"

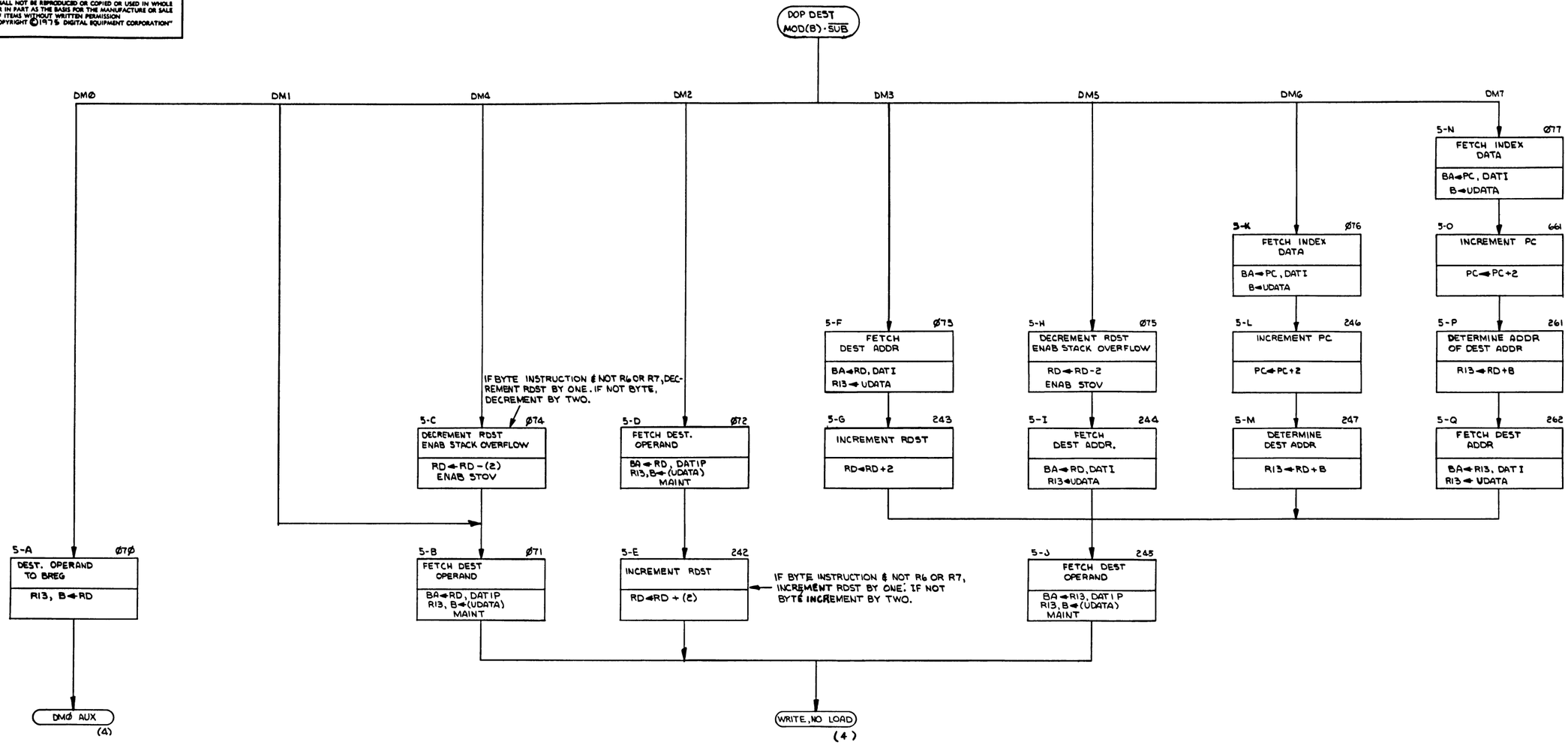

REVISIONS		
CHK	CHANGE NO	REV

TITLE	SIZE	CODE	NUMBER	REV
KDII-EA FLOW DIAGRAMS	D	FD	KDII-EA-1	
SCALE — / —	SHEET 5 OF 26	DIST		

DEC FORM NO. DRD 138

"THIS DRAWING AND SPECIFICATIONS, HEREIN, ARE THE PROPERTY OF DIGITAL EQUIPMENT CORPORATION AND SHALL NOT BE REPRODUCED OR COPIED OR USED IN WHOLE OR IN PART AS THE BASIS FOR THE MANUFACTURE OR SALE OF ITEMS WITHOUT WRITTEN PERMISSION.
COPYRIGHT © 1975 DIGITAL EQUIPMENT CORPORATION"

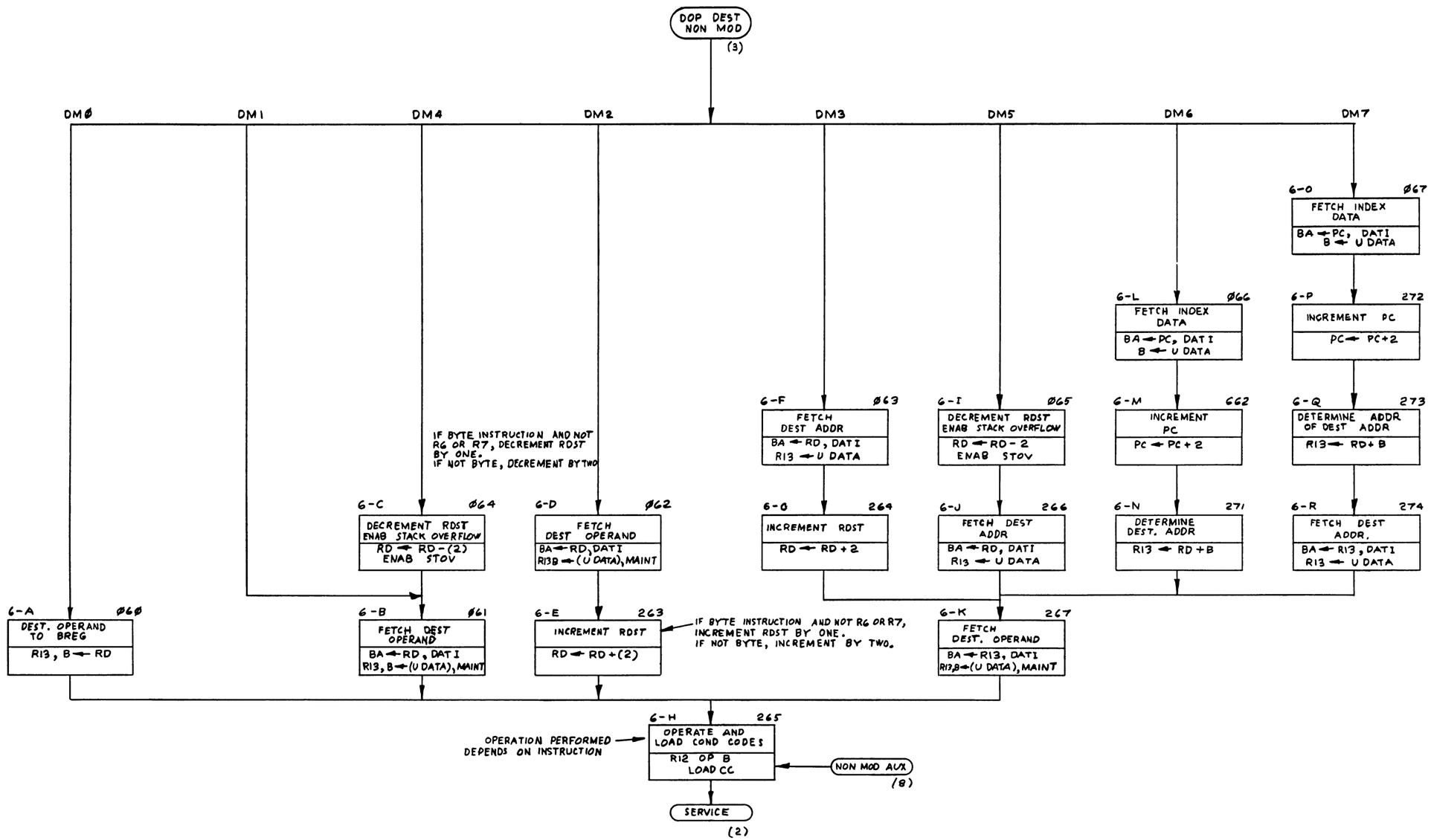

REVISIONS		
CHK	CHANGE NO	REV

TITLE: KDII-EA FLOW DIAGRAMS

SIZE D | CODE FD | NUMBER KDII-EA-1 | REV.

SCALE — | SHEET 6 OF 26 | DIST

DEC FORM NO DRD 138

"THIS DRAWING AND SPECIFICATIONS, HEREIN, ARE THE PROPERTY OF DIGITAL EQUIPMENT CORPORATION AND SHALL NOT BE REPRODUCED OR COPIED OR USED IN WHOLE OR IN PART AS THE BASIS FOR THE MANUFACTURE OR SALE OF ITEMS WITHOUT WRITTEN PERMISSION
COPYRIGHT © 1975 DIGITAL EQUIPMENT CORPORATION"

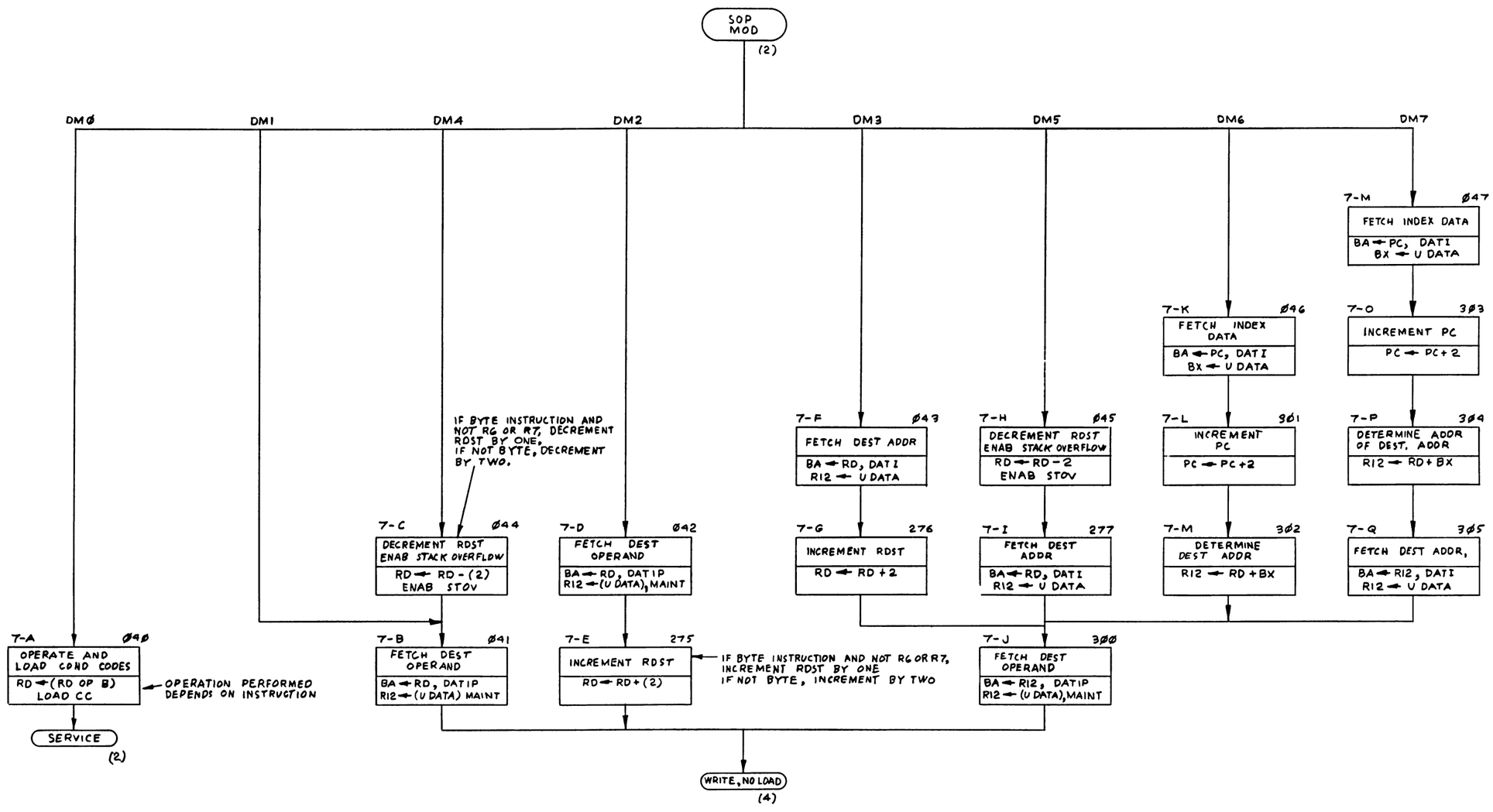

REVISIONS		
CHK	CHANGE NO	REV

TITLE	SIZE	CODE	NUMBER	REV
KDII-EAFLOW DIAGRAMS	D	FD	KDII-EA-1	
SCALE —	SHEET 7 OF 26	DIST		

DEC FORM NO DRD 138

"THIS DRAWING AND SPECIFICATIONS, HEREIN, ARE THE PROPERTY OF DIGITAL EQUIPMENT CORPORATION AND SHALL NOT BE REPRODUCED OR COPIED OR USED IN WHOLE OR IN PART AS THE BASIS FOR THE MANUFACTURE OR SALE OF ITEMS WITHOUT WRITTEN PERMISSION COPYRIGHT © 1970 DIGITAL EQUIPMENT CORPORATION"

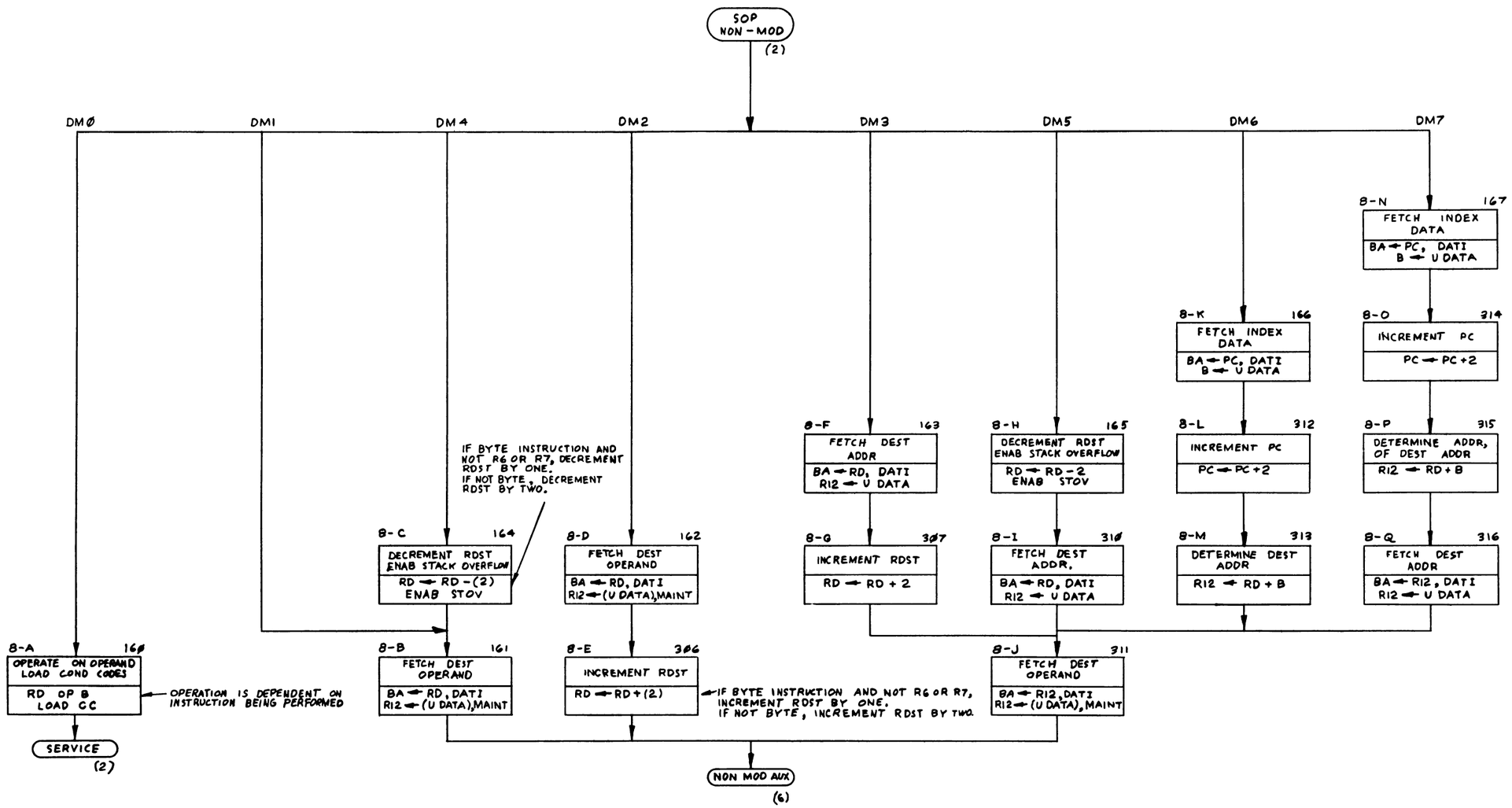

REVISIONS		
CHK	CHANGE NO	REV

TITLE: KDII-EAFLOW DIAGRAM

SIZE D | CODE FD | NUMBER KDII-EA-1 | REV.

SCALE — | SHEET 8 OF 26 | DIST.

DEC FORM NO DRD 138

"THIS DRAWING AND SPECIFICATIONS, HEREIN, ARE THE PROPERTY OF DIGITAL EQUIPMENT CORPORATION AND SHALL NOT BE REPRODUCED OR COPIED OR USED IN WHOLE OR IN PART AS THE BASIS FOR THE MANUFACTURE OR SALE OF ITEMS WITHOUT WRITTEN PERMISSION.
COPYRIGHT ©1975 DIGITAL EQUIPMENT CORPORATION"

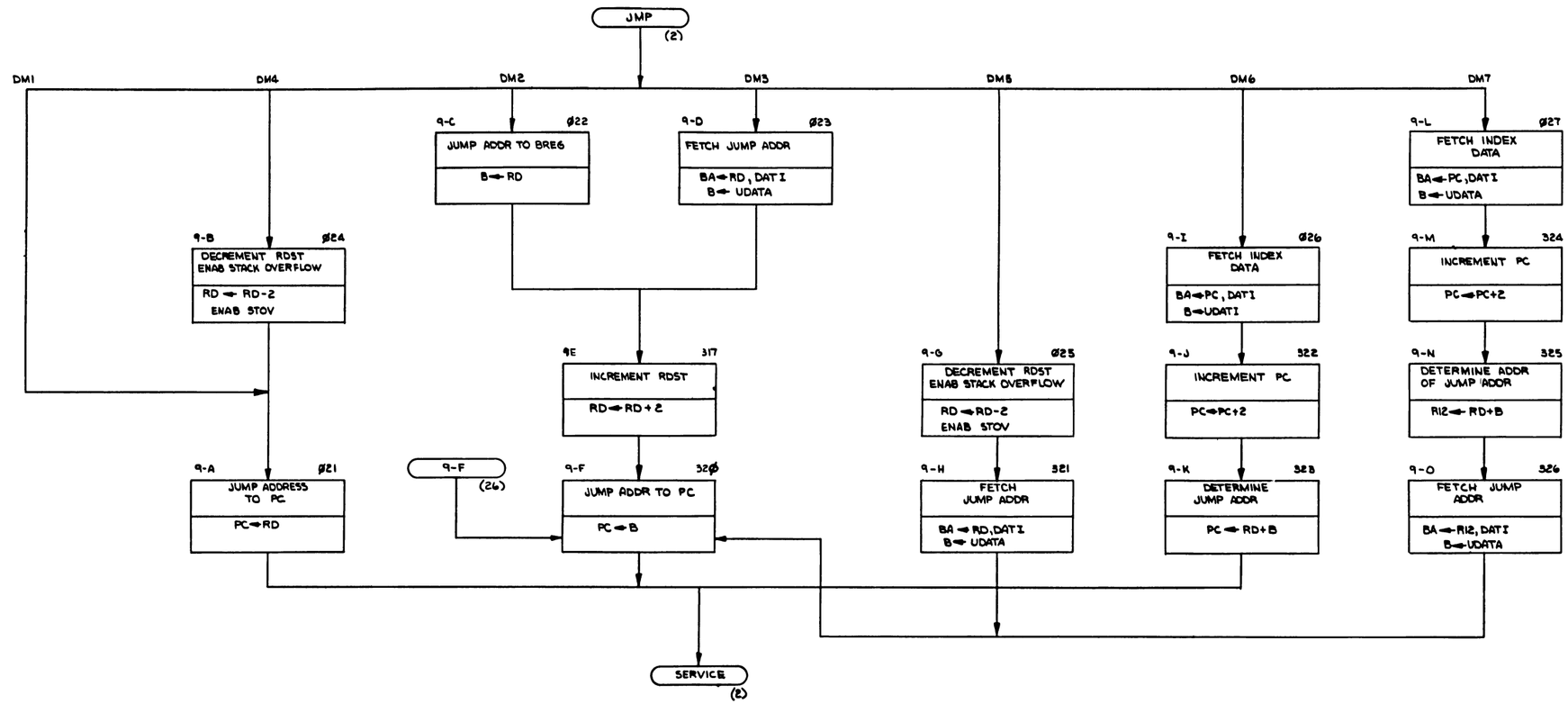

REVISIONS		
CHK	CHANGE NO	REV

TITLE: KDII-EA FLOW DIAGRAMS

SCALE: —/—/— | SHEET 9 OF 26

SIZE D | CODE FD | NUMBER KDII-EA-1 | REV.

DIST.

DEC FORM NO. DRD 138

"THIS DRAWING AND SPECIFICATIONS, HEREIN, ARE THE PROPERTY OF DIGITAL EQUIPMENT CORPORATION AND SHALL NOT BE REPRODUCED OR COPIED OR USED IN WHOLE OR IN PART AS THE BASIS FOR THE MANUFACTURE OR SALE OF ITEMS WITHOUT WRITTEN PERMISSION
COPYRIGHT © 1975 DIGITAL EQUIPMENT CORPORATION"

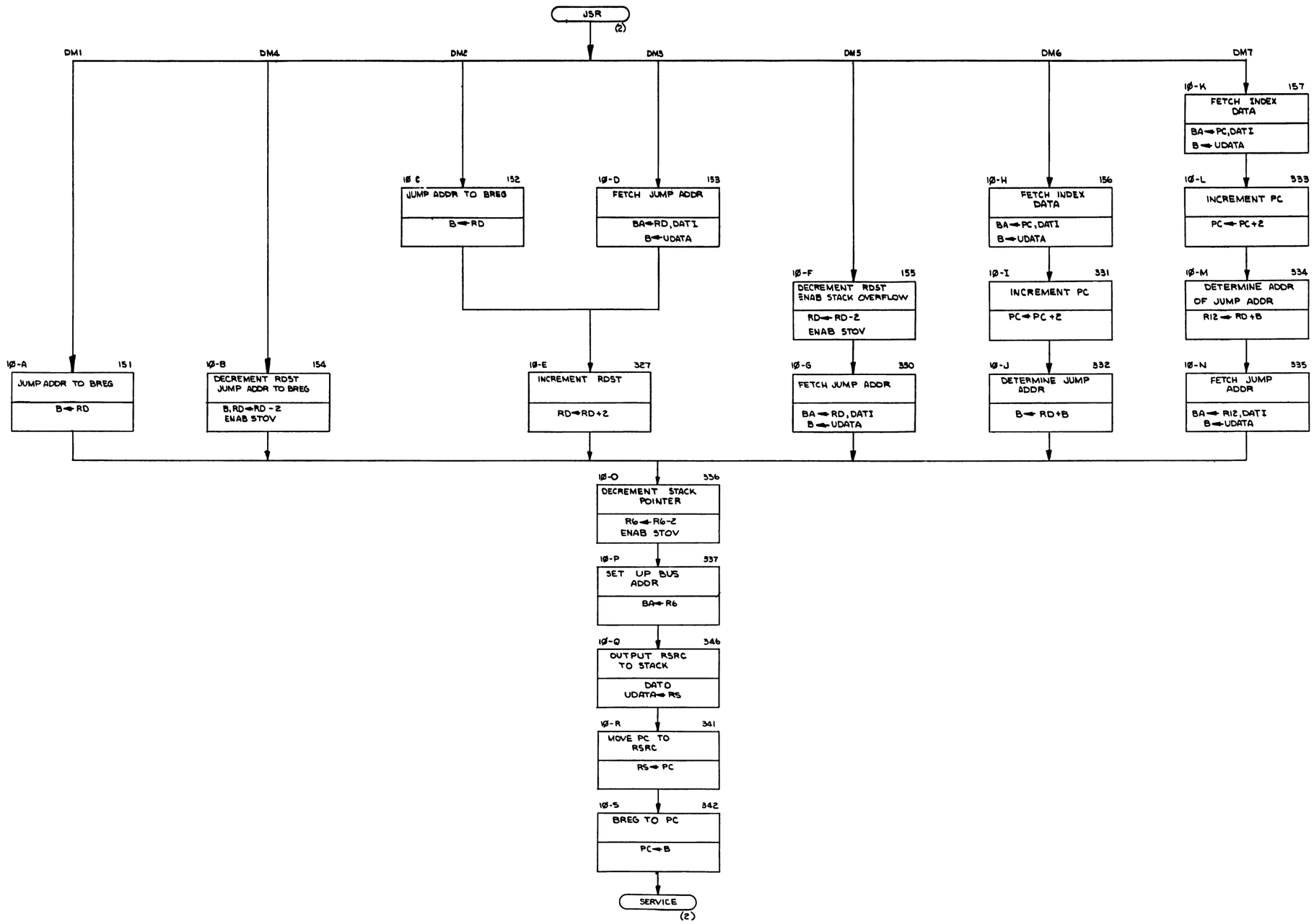

REVISIONS		
CHK	CHANGE NO	REV

TITLE	SIZE	CODE	NUMBER	REV.
KDII-EA FLOW DIAGRAMS	D	FD	KDII-EA-1	
SCALE —	SHEET 10 OF 26		DIST.	

DEC FORM NO. DRD 138

"THIS DRAWING AND SPECIFICATIONS HEREIN ARE THE PROPERTY OF DIGITAL EQUIPMENT CORPORATION AND SHALL NOT BE REPRODUCED OR COPIED OR USED IN WHOLE OR IN PART AS THE BASIS FOR THE MANUFACTURE OR SALE OF ITEMS WITHOUT WRITTEN PERMISSION
COPYRIGHT © 1975 DIGITAL EQUIPMENT CORPORATION"

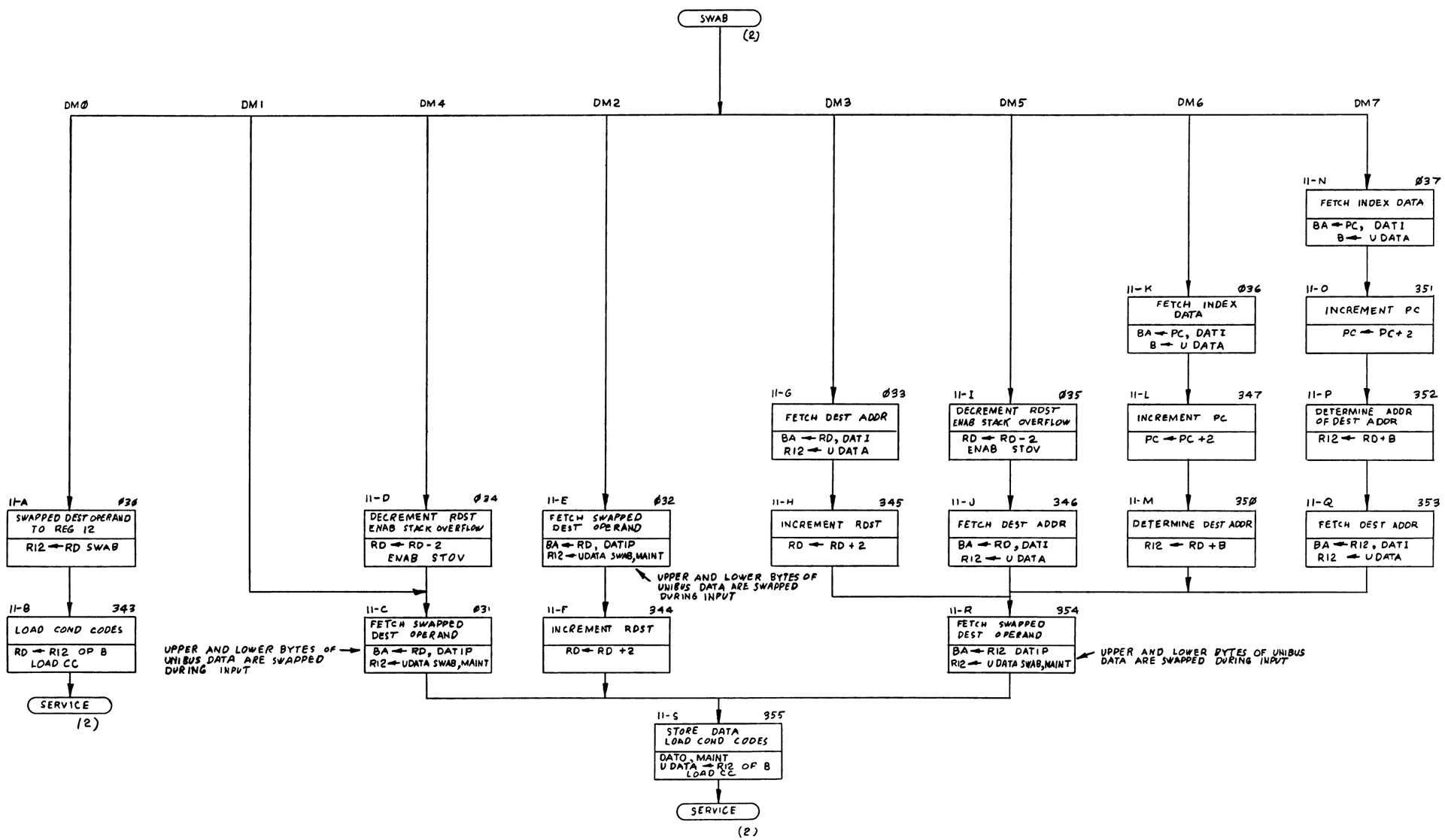

REVISIONS		
CHK	CHANGE NO	REV

TITLE	SIZE	CODE	NUMBER	REV
KDII-EA FLOW DIAGRAMS	D	FD	KDII-EA-1	
SCALE —	SHEET 11 OF 26	DIST		

DEC FORM NO. DRD 138

"THIS DRAWING AND SPECIFICATIONS, HEREIN, ARE THE PROPERTY OF DIGITAL EQUIPMENT CORPORATION AND SHALL NOT BE REPRODUCED OR COPIED OR USED IN WHOLE OR IN PART AS THE BASIS FOR THE MANUFACTURE OR SALE OF ITEMS WITHOUT WRITTEN PERMISSION
COPYRIGHT © 1975 DIGITAL EQUIPMENT CORPORATION"

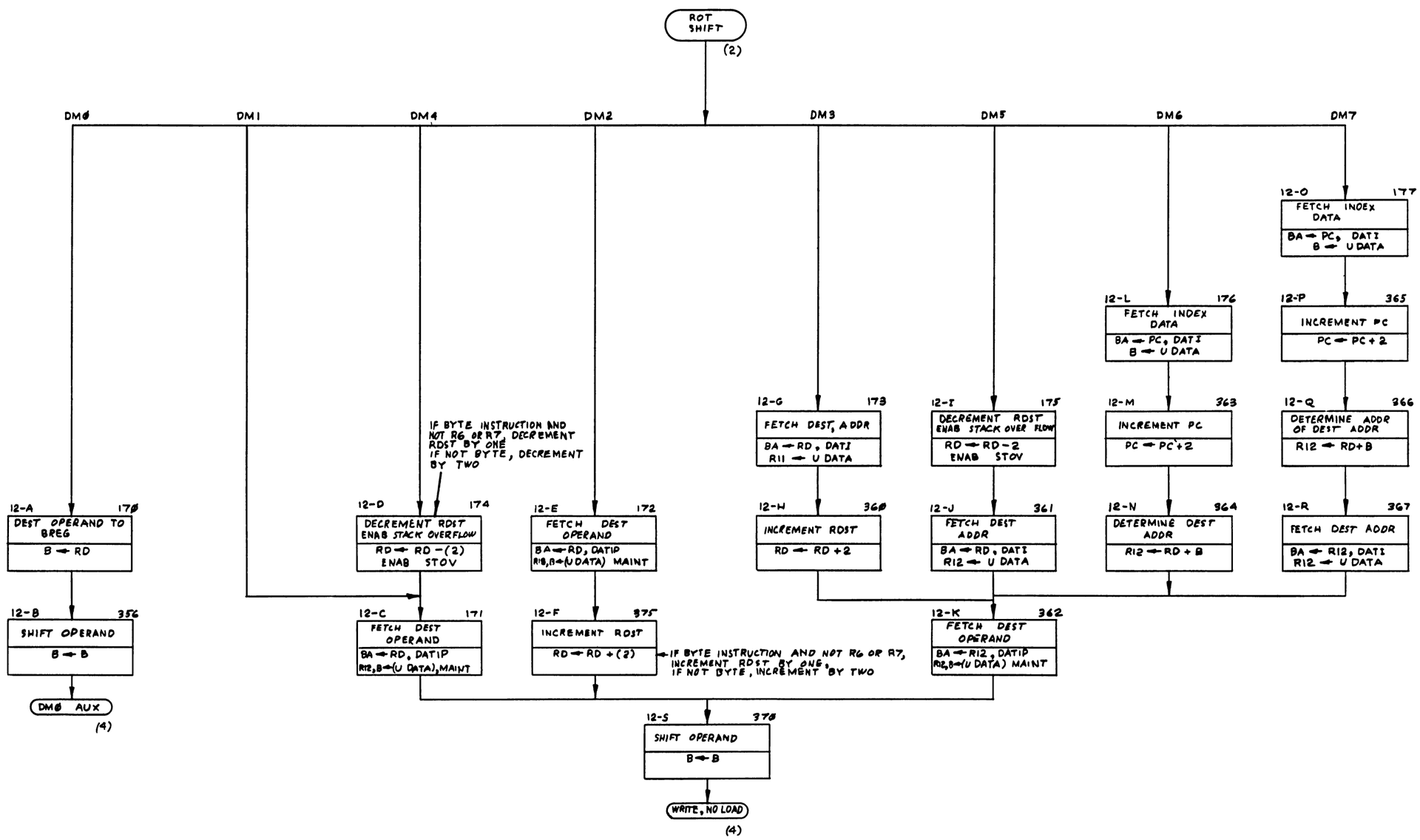

REVISIONS		
CHK	CHANGE NO	REV

TITLE	SIZE	CODE	NUMBER	REV.
KDII-EA FLOW DIAGRAMS	D	FD	KDII-EA-1	
SCALE —	SHEET 12 OF 26	DIST.		

DEC FORM NO. DRD 138

"THIS DRAWING AND SPECIFICATIONS, HEREIN, ARE THE PROPERTY OF DIGITAL EQUIPMENT CORPORATION AND SHALL NOT BE REPRODUCED OR COPIED OR USED IN WHOLE OR IN PART AS THE BASIS FOR THE MANUFACTURE OR SALE OF ITEMS WITHOUT WRITTEN PERMISSION. COPYRIGHT © 1975 DIGITAL EQUIPMENT CORPORATION"

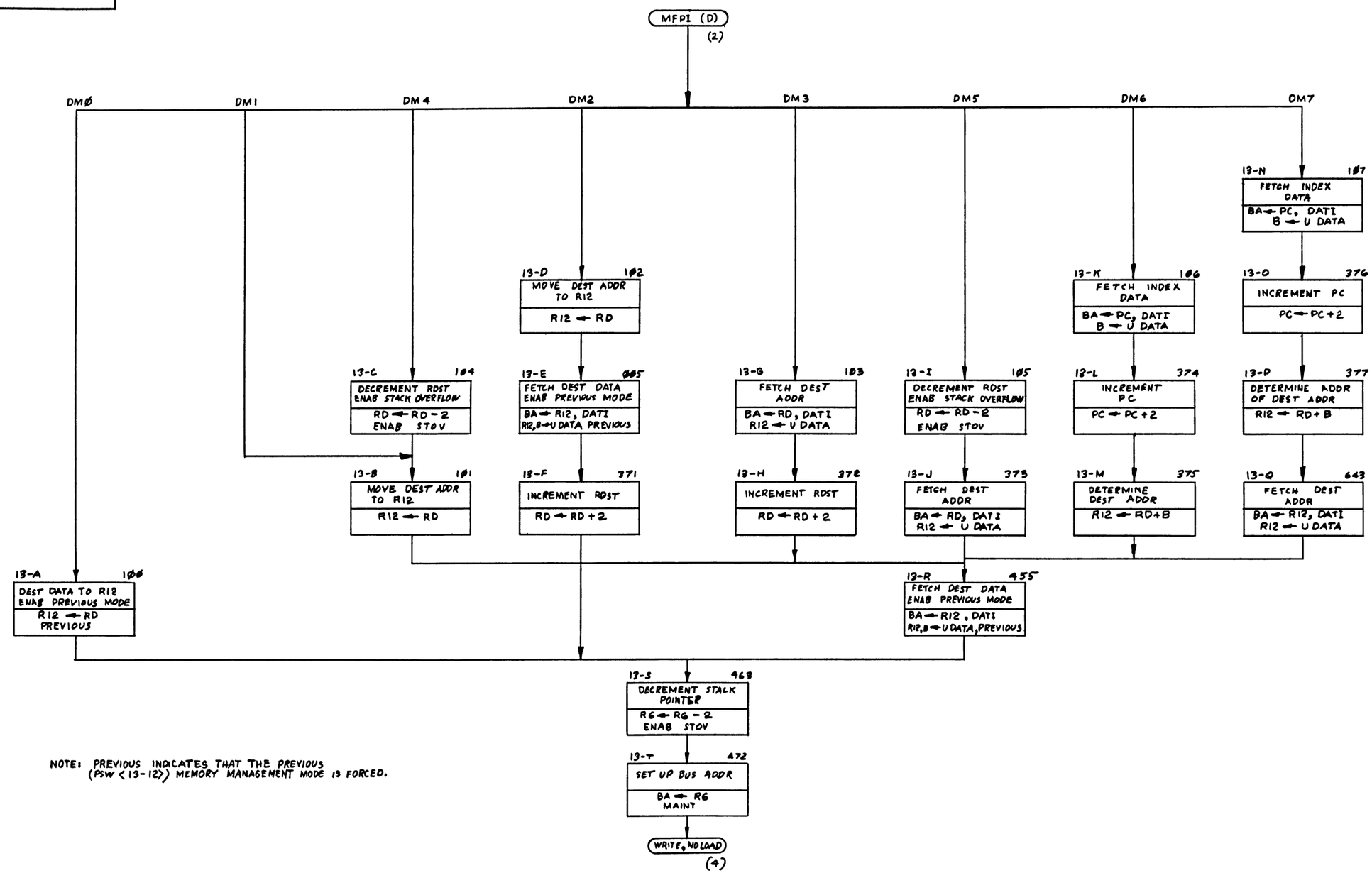

NOTE: PREVIOUS INDICATES THAT THE PREVIOUS (PSW <13-12>) MEMORY MANAGEMENT MODE IS FORCED.

REVISIONS		
CHK	CHANGE NO	REV

TITLE	SIZE	CODE	NUMBER	REV.
KDII-EA FLOW DIAGRAMS	D	FD	KDII-EA-1	
SCALE —/—/—	SHEET 13 OF 26	DIST.		

DEC FORM NO. DRD 138

"THIS DRAWING AND SPECIFICATIONS, HEREIN ARE THE PROPERTY OF DIGITAL EQUIPMENT CORPORATION AND SHALL NOT BE REPRODUCED OR COPIED OR USED IN WHOLE OR IN PART AS THE BASIS FOR THE MANUFACTURE OR SALE OF ITEMS WITHOUT WRITTEN PERMISSION
COPYRIGHT © 1975 DIGITAL EQUIPMENT CORPORATION"

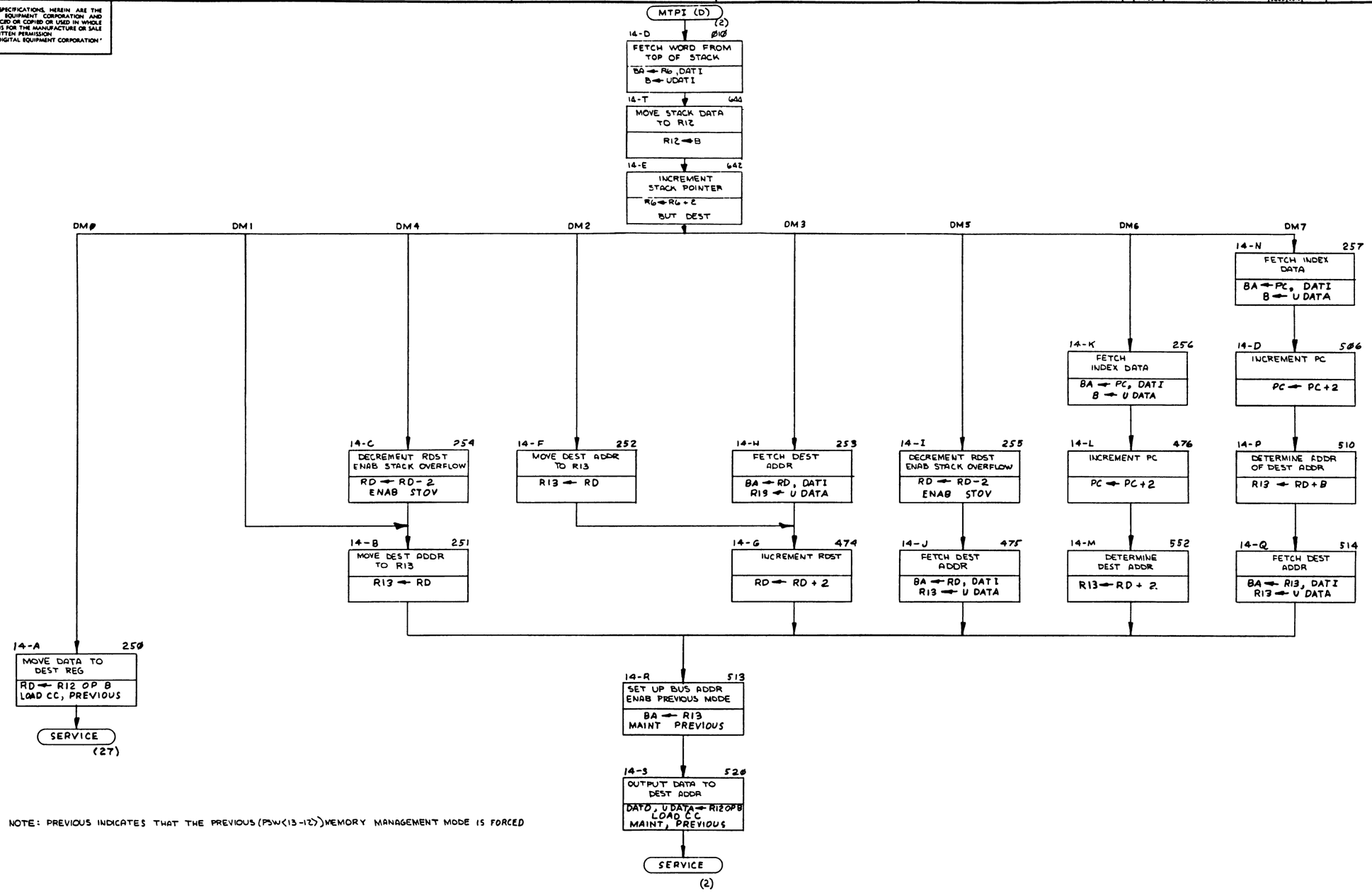

NOTE: PREVIOUS INDICATES THAT THE PREVIOUS (PSW<13-12>) MEMORY MANAGEMENT MODE IS FORCED

REVISIONS		
CHK	CHANGE NO	REV

TITLE	SIZE	CODE	NUMBER	REV.
KDII-EA FLOW DIAGRAMS	D	FD	KDII-EA-1	
SCALE —	SHEET 14 OF 26	DIST		

DEC FORM NO DRD 138

"THIS DRAWING AND SPECIFICATIONS, HEREIN, ARE THE PROPERTY OF DIGITAL EQUIPMENT CORPORATION AND SHALL NOT BE REPRODUCED OR COPIED OR USED IN WHOLE OR IN PART AS THE BASIS FOR THE MANUFACTURE OR SALE OF ITEMS WITHOUT WRITTEN PERMISSION
COPYRIGHT © 1975 DIGITAL EQUIPMENT CORPORATION"

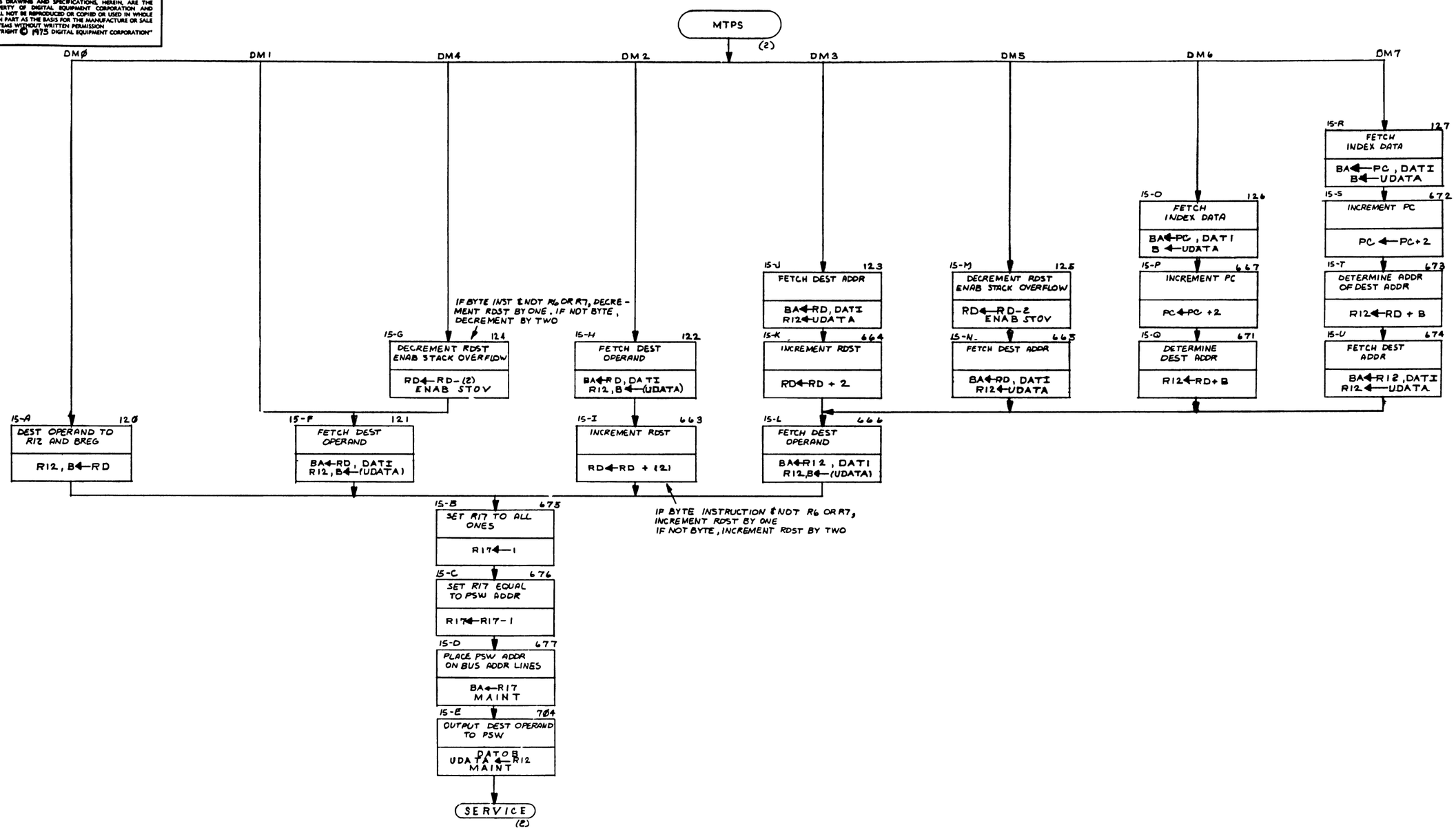

REVISIONS		
CHK	CHANGE NO	REV

TITLE	SIZE	CODE	NUMBER	REV.
KDII-EA FLOW DIAGRAMS	D	FD	KDII-EA -1	
SCALE — / —	SHEET 15 OF 26	DIST		

DEC FORM NO. DRD 138

"THIS DRAWING AND SPECIFICATIONS, HEREIN, ARE THE PROPERTY OF DIGITAL EQUIPMENT CORPORATION AND SHALL NOT BE REPRODUCED OR COPIED OR USED IN WHOLE OR IN PART AS THE BASIS FOR THE MANUFACTURE OR SALE OF ITEMS WITHOUT WRITTEN PERMISSION. COPYRIGHT © 1975 DIGITAL EQUIPMENT CORPORATION"

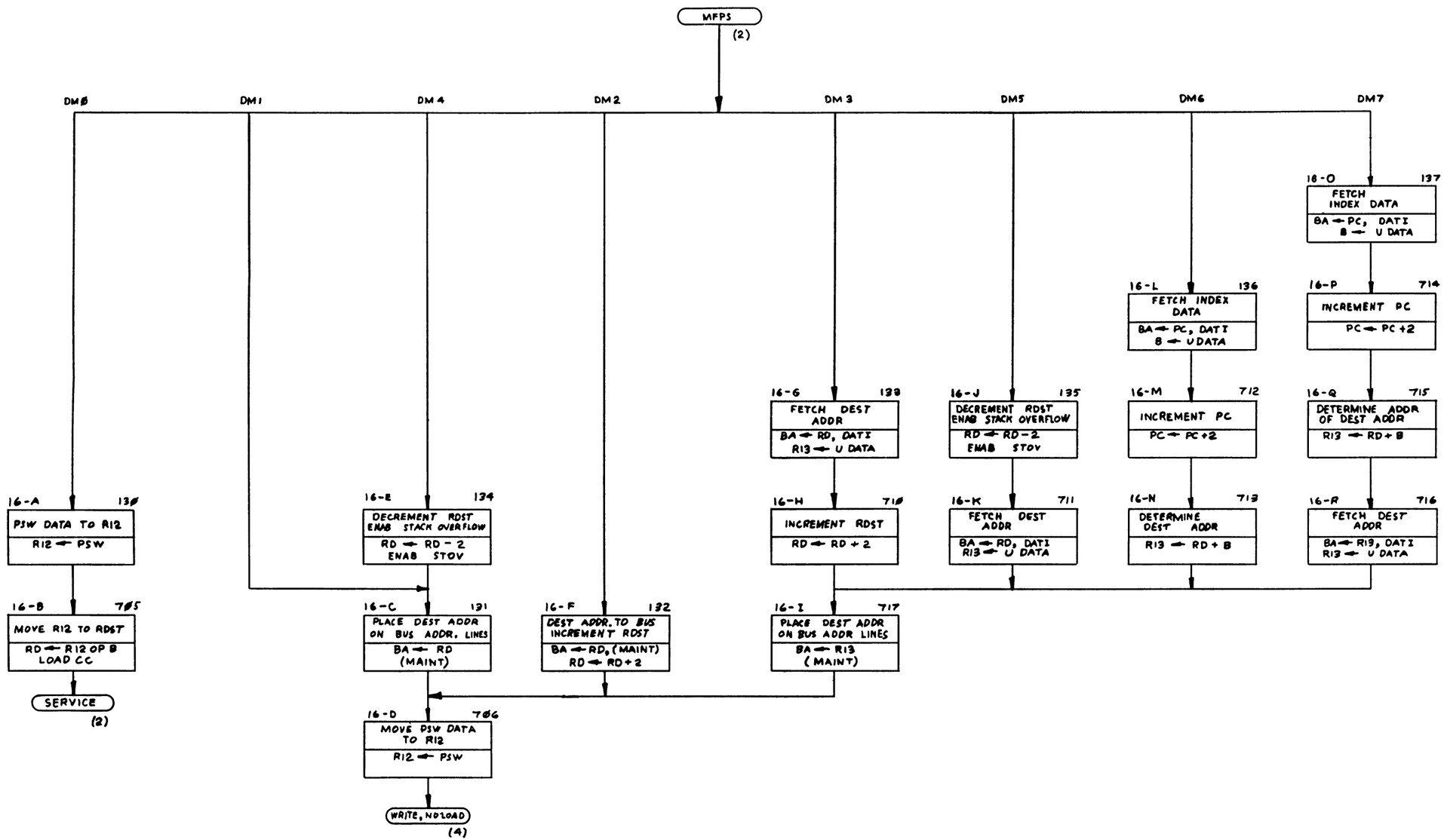

REVISIONS		
CHK	CHANGE NO.	REV

TITLE	SIZE	CODE	NUMBER	REV.
KDII-EA FLOW DIAGRAMS	D	FD	KDII-EA-1	
SCALE —	SHEET 16 OF 26	DIST.		

DEC FORM NO. 2010 1.2.3

"THIS DRAWING AND SPECIFICATIONS HEREIN ARE THE PROPERTY OF DIGITAL EQUIPMENT CORPORATION AND SHALL NOT BE REPRODUCED OR COPIED OR USED IN WHOLE OR IN PART AS THE BASIS FOR THE MANUFACTURE OR SALE OF ITEMS WITHOUT WRITTEN PERMISSION COPYRIGHT © 1975 DIGITAL EQUIPMENT CORPORATION"

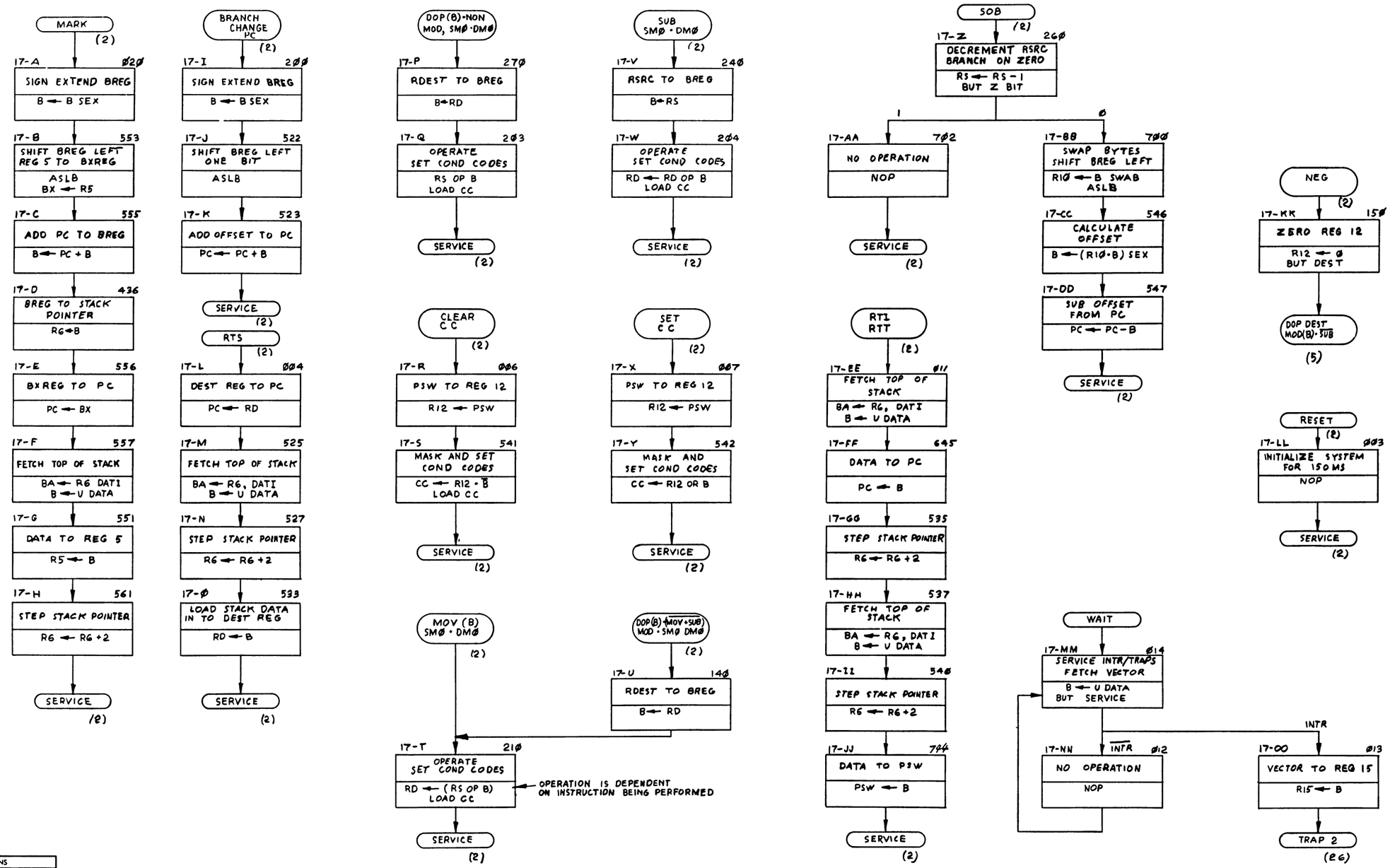

REVISIONS		
CHK	CHANGE NO	REV

TITLE	SIZE	CODE	NUMBER	REV.
KDI I-EA FLOW DIAGRAMS	D	FD	KDII-EA-1	
SCALE —	SHEET 17 OF 26	DIST		

DEC FORM NO DRD 138

"THIS DRAWING AND SPECIFICATIONS, HEREIN, ARE THE PROPERTY OF DIGITAL EQUIPMENT CORPORATION AND SHALL NOT BE REPRODUCED OR COPIED OR USED IN WHOLE OR IN PART AS THE BASIS FOR THE MANUFACTURE OR SALE OF ITEMS WITHOUT WRITTEN PERMISSION. COPYRIGHT © 1973 DIGITAL EQUIPMENT CORPORATION"

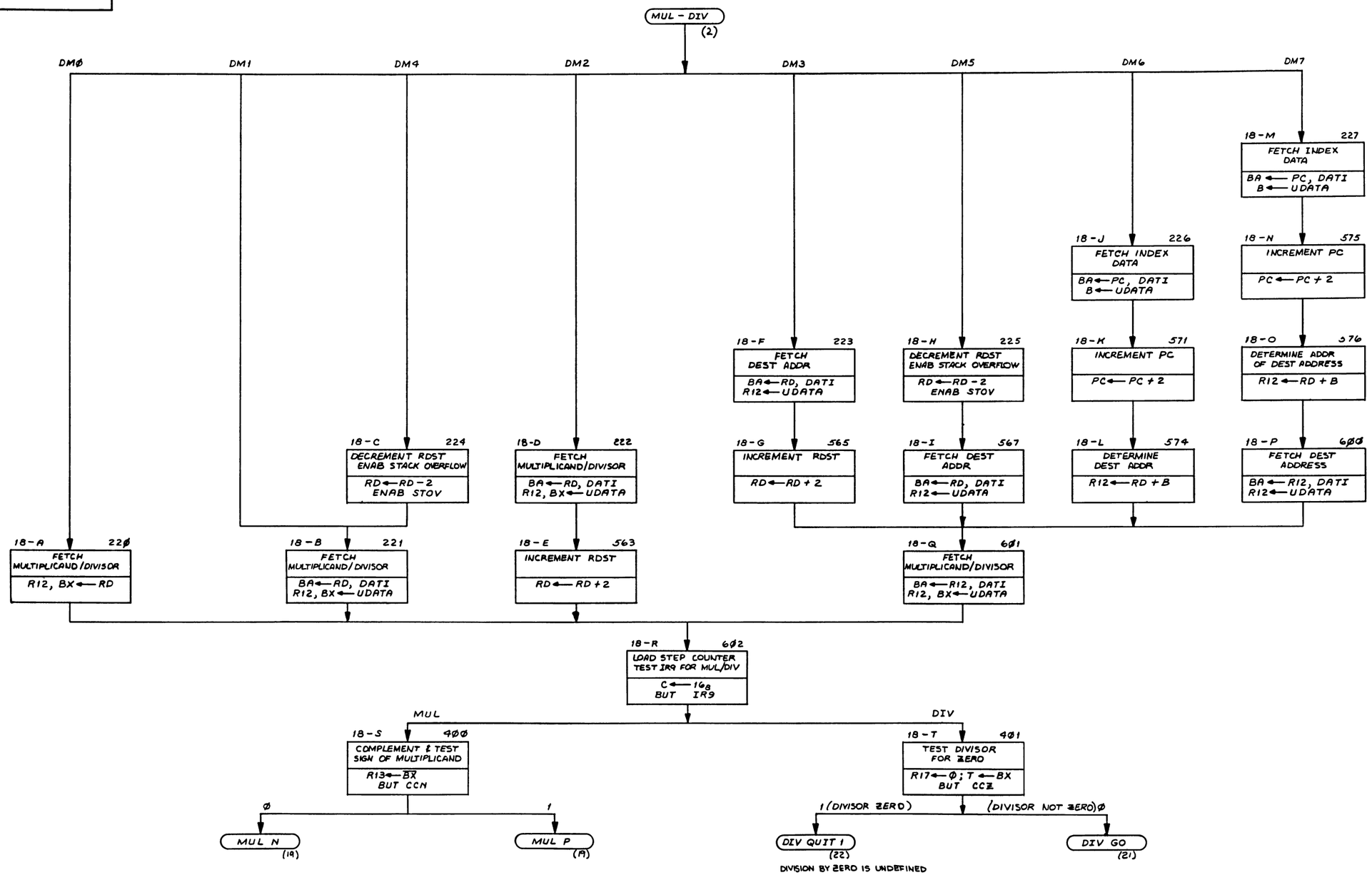

REVISIONS		
CHK	CHANGE NO	REV

TITLE	SIZE	CODE	NUMBER	REV.
KDII EAFLOW DIAGRAMS	D	FD	KDII-EA-1	
SCALE —	SHEET 18 OF 26	DIST.		

DEC FORM NO. DRD 138

"THIS DRAWING AND SPECIFICATIONS, HEREIN, ARE THE PROPERTY OF DIGITAL EQUIPMENT CORPORATION AND SHALL NOT BE REPRODUCED OR COPIED OR USED IN WHOLE OR IN PART AS THE BASIS FOR THE MANUFACTURE OR SALE OF ITEMS WITHOUT WRITTEN PERMISSION COPYRIGHT © 1975 DIGITAL EQUIPMENT CORPORATION"

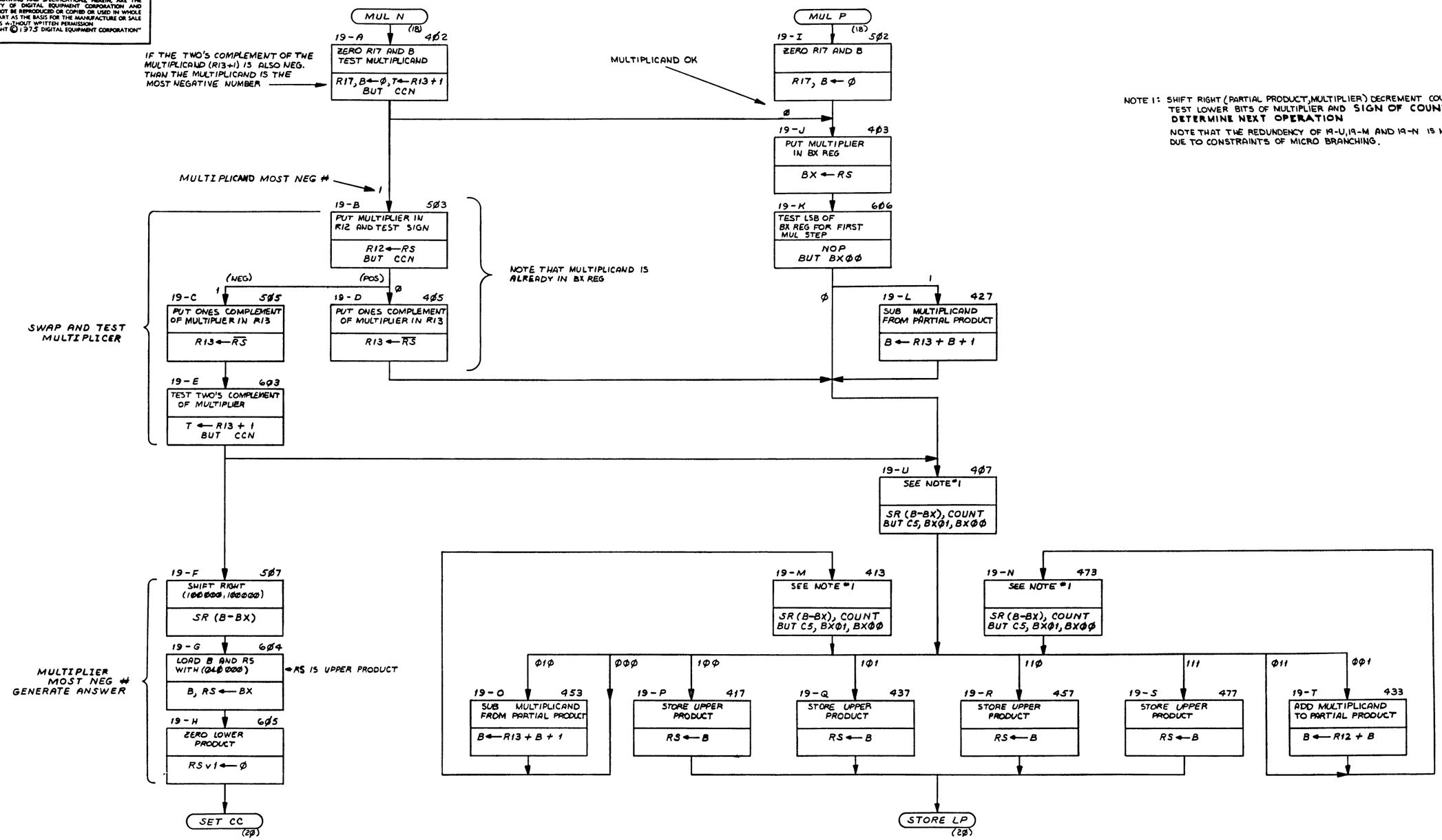

NOTE 1: SHIFT RIGHT (PARTIAL PRODUCT, MULTIPLIER) DECREMENT COUNTER TEST LOWER BITS OF MULTIPLIER AND **SIGN OF COUNTER TO DETERMINE NEXT OPERATION**

NOTE THAT THE REDUNDENCY OF 19-U, 19-M AND 19-N IS NECESSARY DUE TO CONSTRAINTS OF MICRO BRANCHING.

REVISIONS		
CHK	CHANGE NO	REV

TITLE	SIZE	CODE	NUMBER	REV.
KDII-EA FLOW DIAGRAMS	D	FD	KDII-EA -1	
SCALE —	SHEET 19 OF 26		DIST	

DEC FORM NO

"THIS DRAWING AND SPECIFICATIONS, HEREIN, ARE THE PROPERTY OF DIGITAL EQUIPMENT CORPORATION AND SHALL NOT BE REPRODUCED OR COPIED OR USED IN WHOLE OR IN PART AS THE BASIS FOR THE MANUFACTURE OR SALE OF ITEMS WITHOUT WRITTEN PERMISSION. COPYRIGHT © 1975 DIGITAL EQUIPMENT CORPORATION"

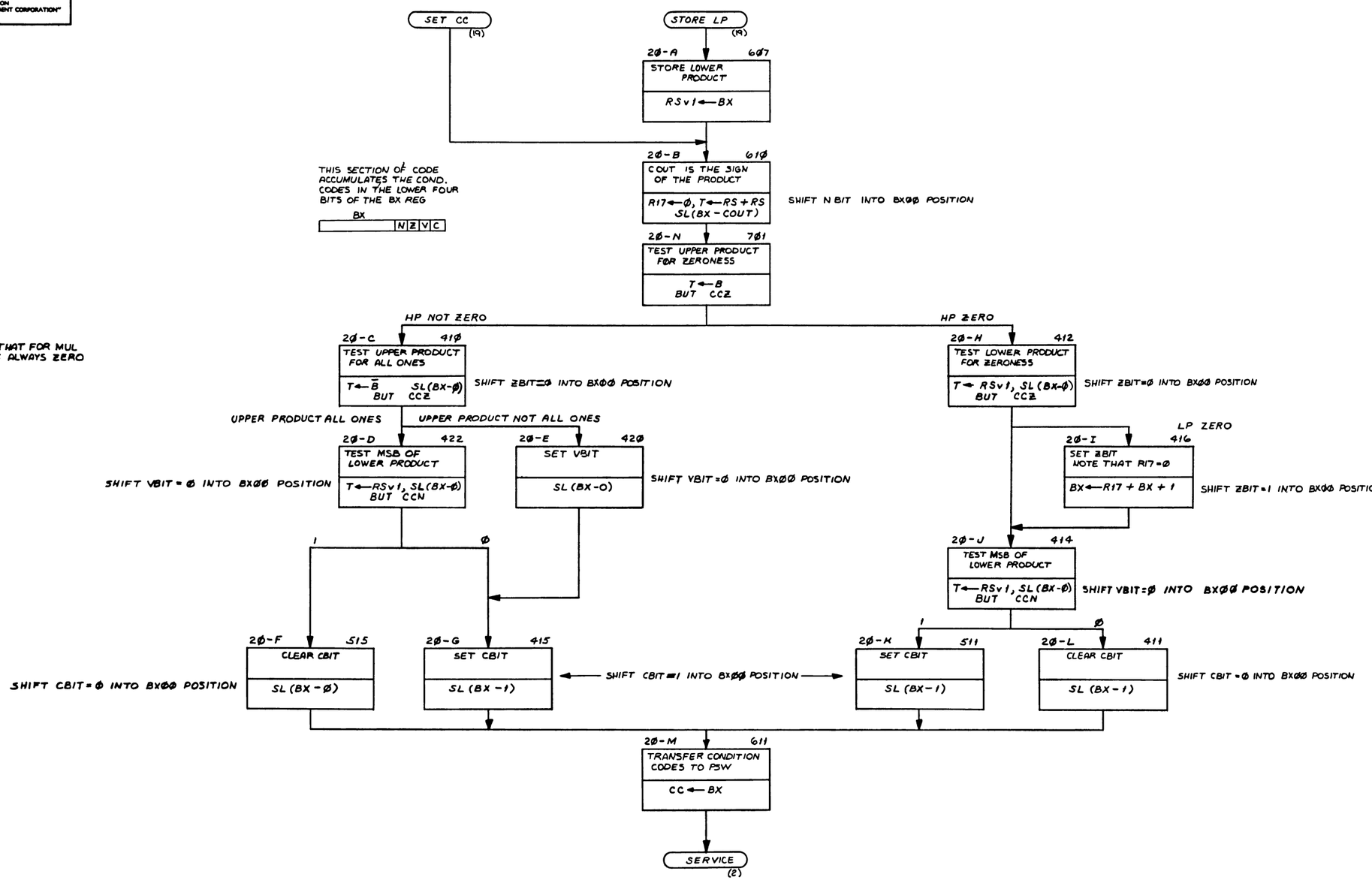

REVISIONS		
CHK	CHANGE NO	REV

TITLE	SIZE	CODE	NUMBER	REV.
KDII-EA FLOW DIAGRAMS	D	FD	KDII-EA-1	
SCALE —	SHEET 20 OF 26	DIST.		

DEC FORM NO. DRD 138

"THIS DRAWING AND SPECIFICATIONS, HEREIN, ARE THE PROPERTY OF DIGITAL EQUIPMENT CORPORATION AND SHALL NOT BE REPRODUCED OR COPIED OR USED IN WHOLE OR IN PART AS THE BASIS FOR THE MANUFACTURE OR SALE OF ITEMS WITHOUT WRITTEN PERMISSION
COPYRIGHT © 1975 DIGITAL EQUIPMENT CORPORATION"

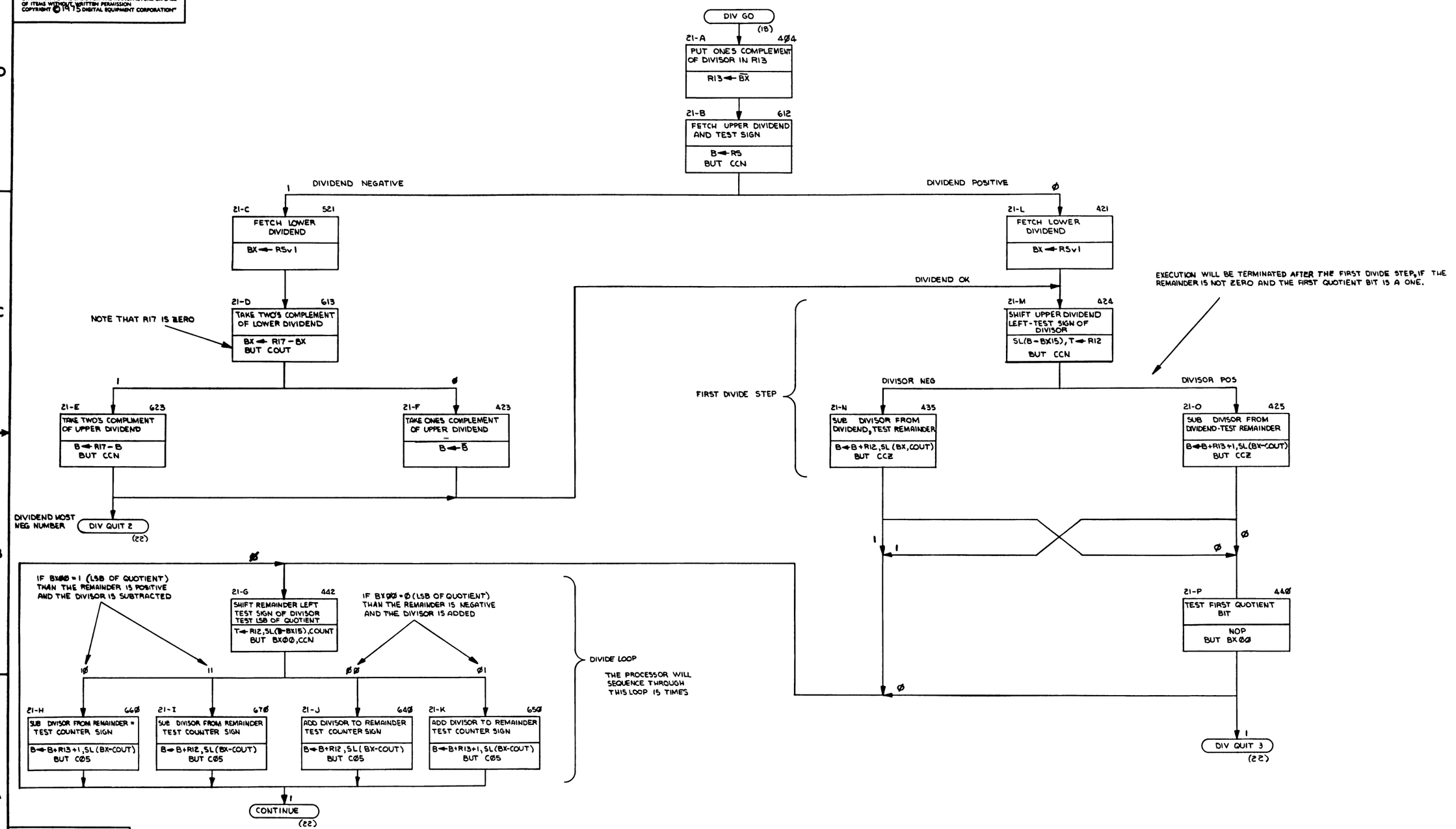

REVISIONS		
CHK	CHANGE NO	REV

TITLE	SIZE	CODE	NUMBER	REV
KDII-EA FLOW DIAGRAMS	D	FD	KDII-EA-1	
SCALE —	SHEET 21 OF 26	DIST		

DEC FORM NO DRD 138

"THIS DRAWING AND SPECIFICATIONS, HEREIN, ARE THE PROPERTY OF DIGITAL EQUIPMENT CORPORATION AND SHALL NOT BE REPRODUCED OR COPIED OR USED IN WHOLE OR IN PART AS THE BASIS FOR THE MANUFACTURE OR SALE OF ITEMS WITHOUT WRITTEN PERMISSION
COPYRIGHT © 1975 DIGITAL EQUIPMENT CORPORATION"

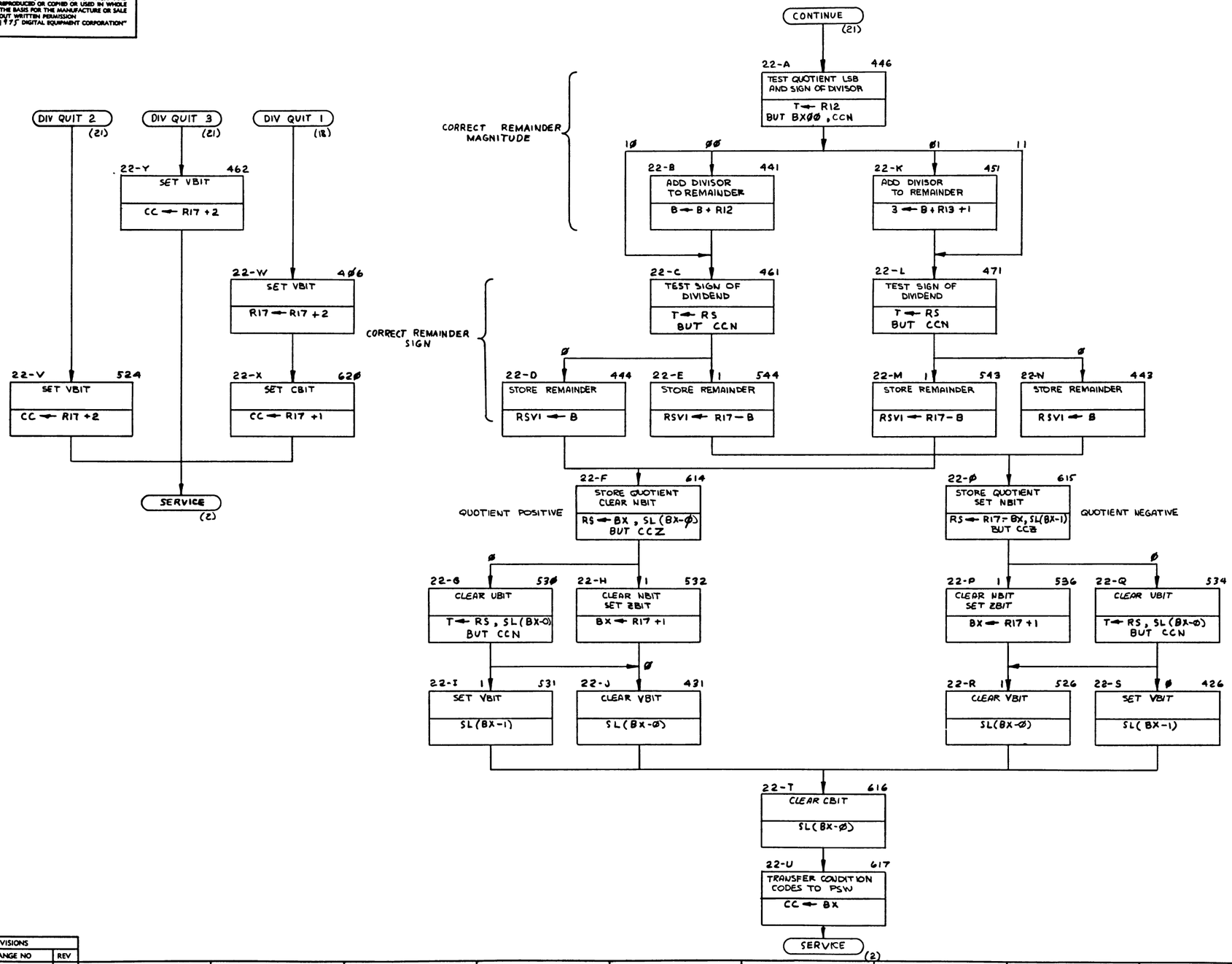

REVISIONS		
CHK	CHANGE NO	REV

TITLE	SIZE	CODE	NUMBER	REV.
KDII-EA FLOW DIAGRAMS	D	FD	KDII-EA-1	
SCALE —	SHEET 22 OF 26	DIST.		

DEC FORM NO. DRD 138

"THIS DRAWING AND SPECIFICATIONS, HEREIN, ARE THE PROPERTY OF DIGITAL EQUIPMENT CORPORATION AND SHALL NOT BE REPRODUCED OR COPIED OR USED IN WHOLE OR IN PART AS THE BASIS FOR THE MANUFACTURE OR SALE OF ITEMS WITHOUT WRITTEN PERMISSION. COPYRIGHT © 1975 DIGITAL EQUIPMENT CORPORATION"

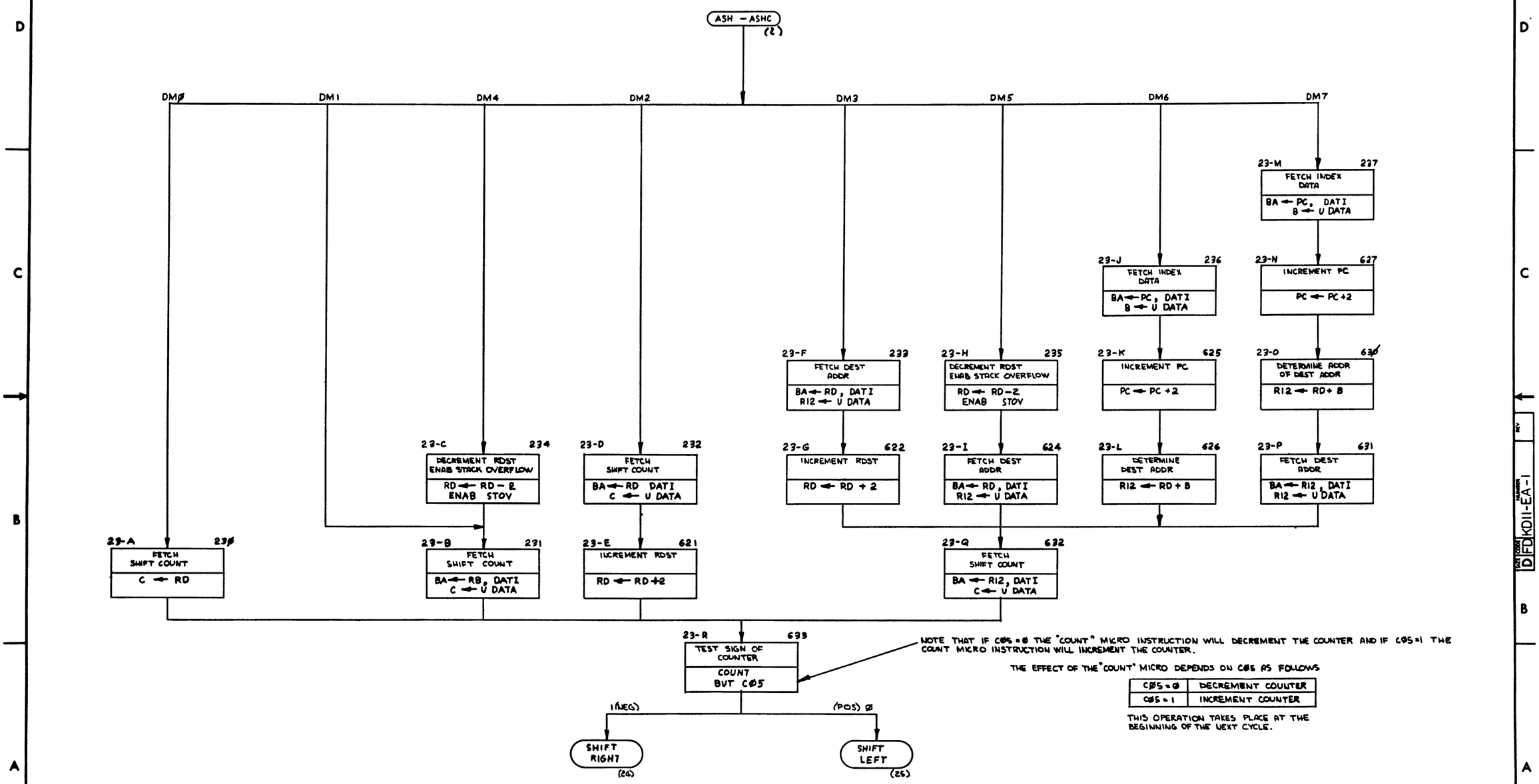

NOTE THAT IF C05 = 0 THE "COUNT" MICRO INSTRUCTION WILL DECREMENT THE COUNTER AND IF C05=1 THE COUNT MICRO INSTRUCTION WILL INCREMENT THE COUNTER.

THE EFFECT OF THE "COUNT" MICRO DEPENDS ON C05 AS FOLLOWS

C05 = 0	DECREMENT COUNTER
C05 = 1	INCREMENT COUNTER

THIS OPERATION TAKES PLACE AT THE BEGINNING OF THE NEXT CYCLE.

REVISIONS		
CHK	CHANGE NO	REV

TITLE	SIZE	CODE	NUMBER	REV.
KDII-EA FLOW DIAGRAMS	D	FD	KDII-EA-1	
SCALE	SHEET 23 OF 26	DIST.		

DEC FORM NO. DRD 138

"THIS DRAWING AND SPECIFICATIONS, HEREIN ARE THE PROPERTY OF DIGITAL EQUIPMENT CORPORATION AND SHALL NOT BE REPRODUCED OR COPIED OR USED IN WHOLE OR IN PART AS THE BASIS FOR THE MANUFACTURE OR SALE OF ITEMS WITHOUT WRITTEN PERMISSION COPYRIGHT © 1975 DIGITAL EQUIPMENT CORPORATION"

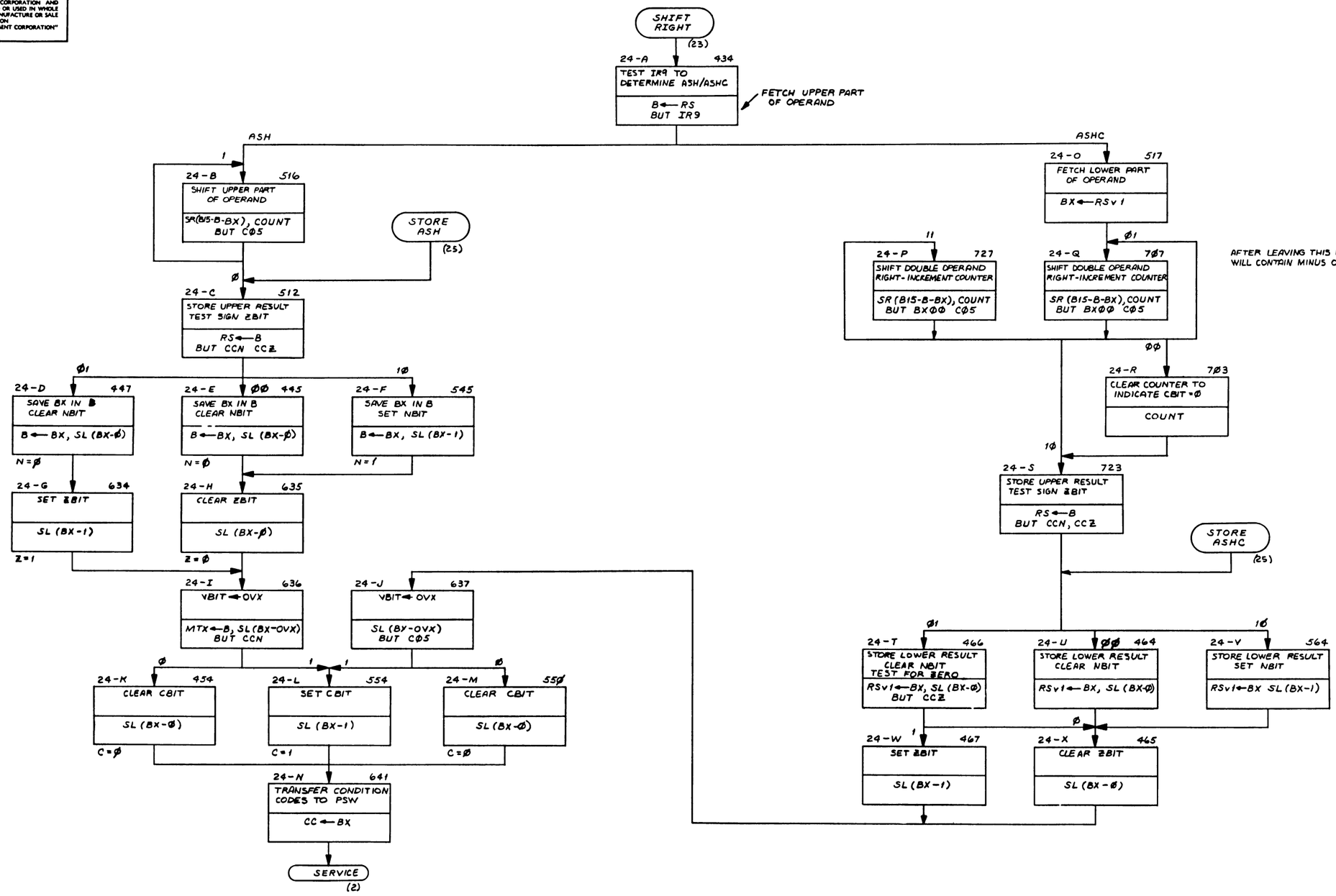

REVISIONS		
CHK	CHANGE NO	REV

DEC FORM NO. DRD 138

TITLE: KDII-EA FLOW DIAGRAMS

SCALE: —/—

SHEET 24 OF 26

SIZE D | CODE FD | NUMBER KDII-EA-1 | REV

DIST

"THIS DRAWING AND SPECIFICATIONS, HEREIN, ARE THE PROPERTY OF DIGITAL EQUIPMENT CORPORATION AND SHALL NOT BE REPRODUCED OR COPIED OR USED IN WHOLE OR IN PART AS THE BASIS FOR THE MANUFACTURE OR SALE OF ITEMS WITHOUT WRITTEN PERMISSION COPYRIGHT © 1975 DIGITAL EQUIPMENT CORPORATION"

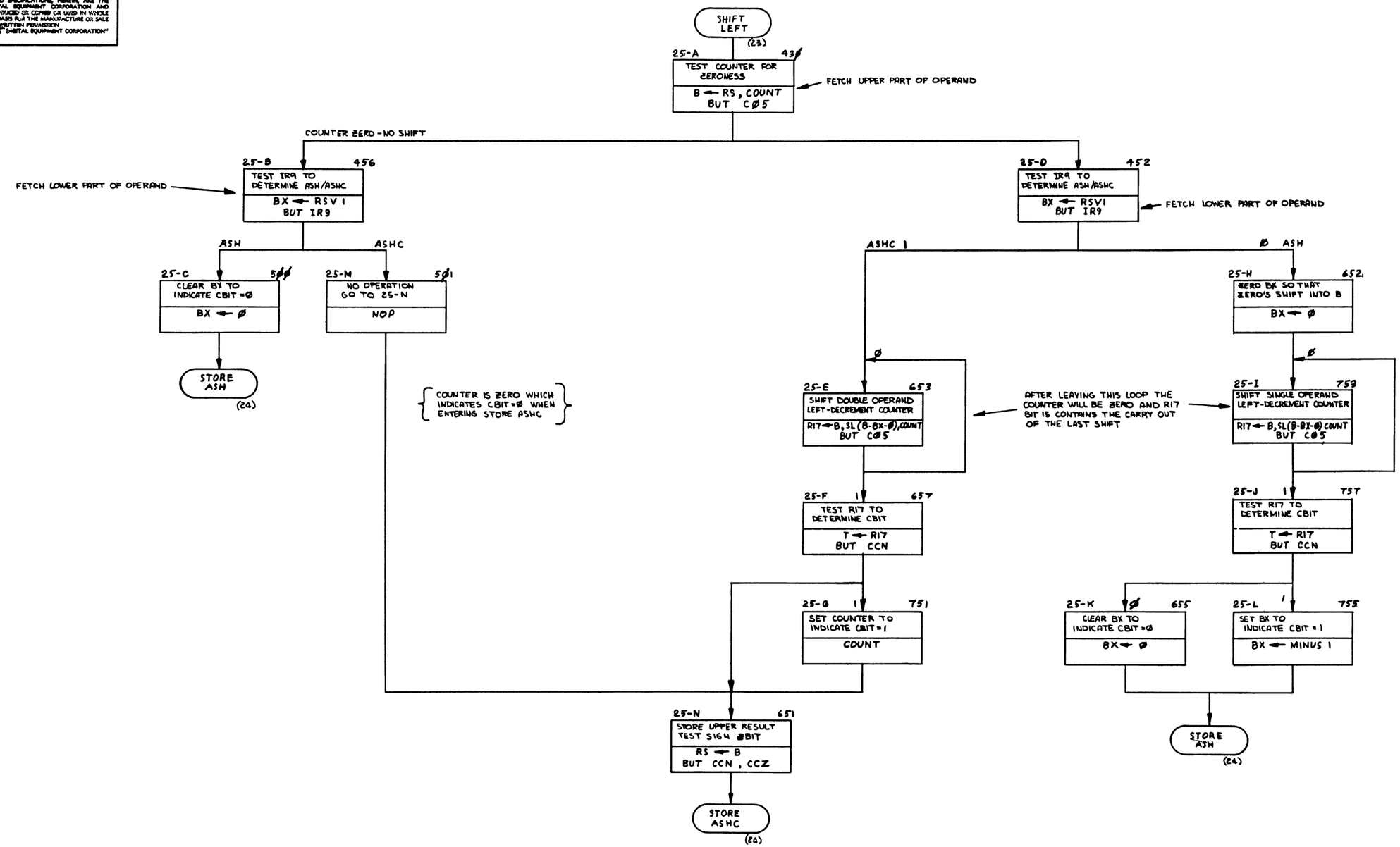

REVISIONS		
CHK	CHANGE NO	REV

TITLE	SIZE	CODE	NUMBER	REV.
KDIIEAFLOW DIAGRAMS	D	FD	KDII-EA-1	
SCALE	SHEET 25 OF 26	DIST.		

DEC FORM NO. DRD 128

"THIS DRAWING AND SPECIFICATIONS, HEREIN ARE THE PROPERTY OF DIGITAL EQUIPMENT CORPORATION AND SHALL NOT BE REPRODUCED OR COPIED OR USED IN WHOLE OR IN PART AS THE BASIS FOR THE MANUFACTURE OR SALE OF ITEMS WITHOUT WRITTEN PERMISSION. COPYRIGHT ©1976 DIGITAL EQUIPMENT CORPORATION"

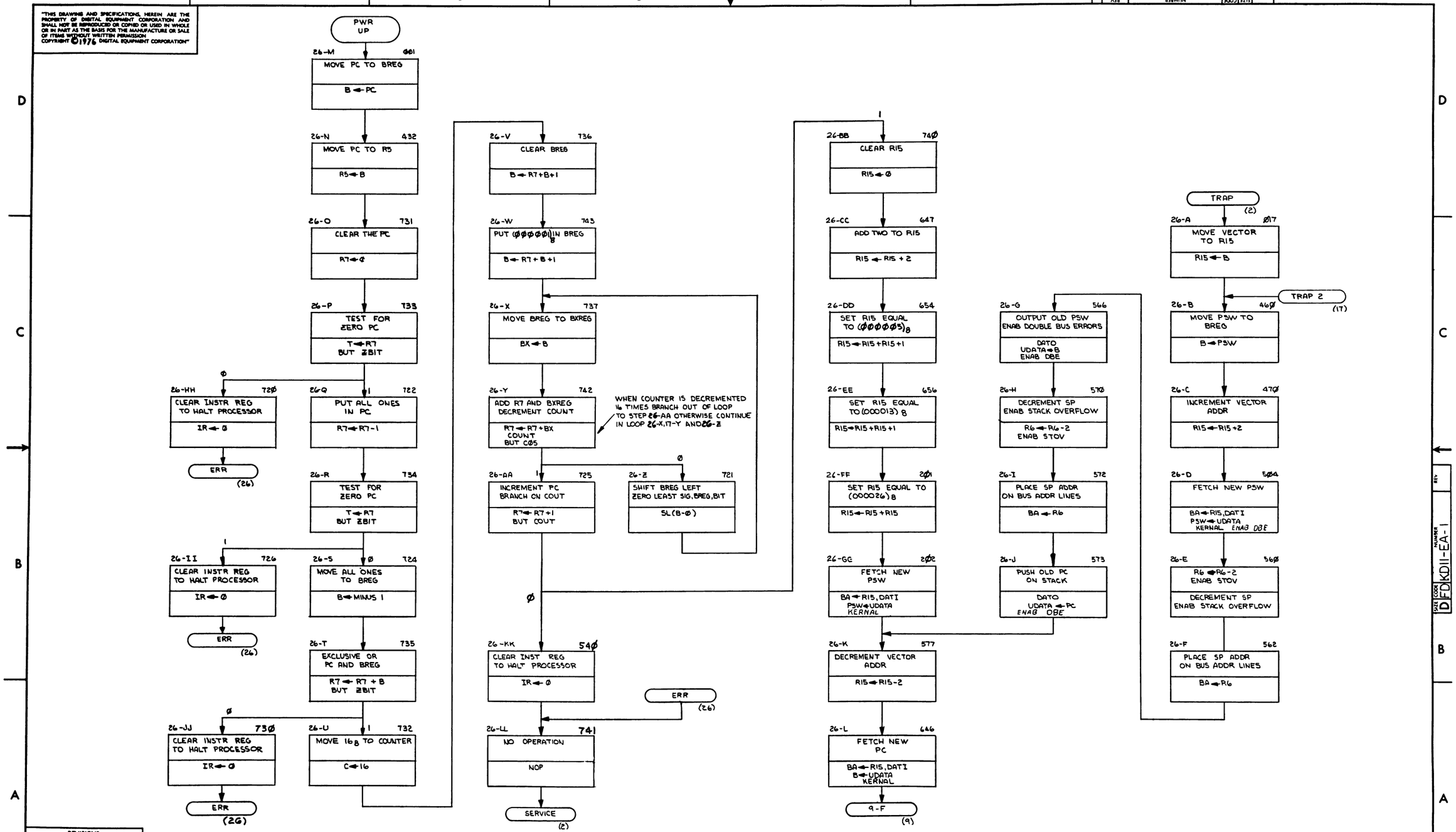

REVISIONS		
CHK	CHANGE NO	REV

TITLE	SIZE	CODE	NUMBER	REV.
KDII-EA FLOW DIAGRAMS	D	FD	KDII-EA-1	
SCALE —	SHEET 26 OF 26		DIST	

DEC FORM NO DRD 130

THESE DRAWINGS AND SPECIFICATIONS, HEREIN, ARE THE PROPERTY OF DIGITAL EQUIPMENT CORPORATION AND SHALL NOT BE REPRODUCED OR COPIED OR USED IN WHOLE OR IN PART WITHOUT WRITTEN PERMISSION.
COPYRIGHT © 1977 DIGITAL EQUIPMENT CORPORATION

COMPONENT SIDE VIEW

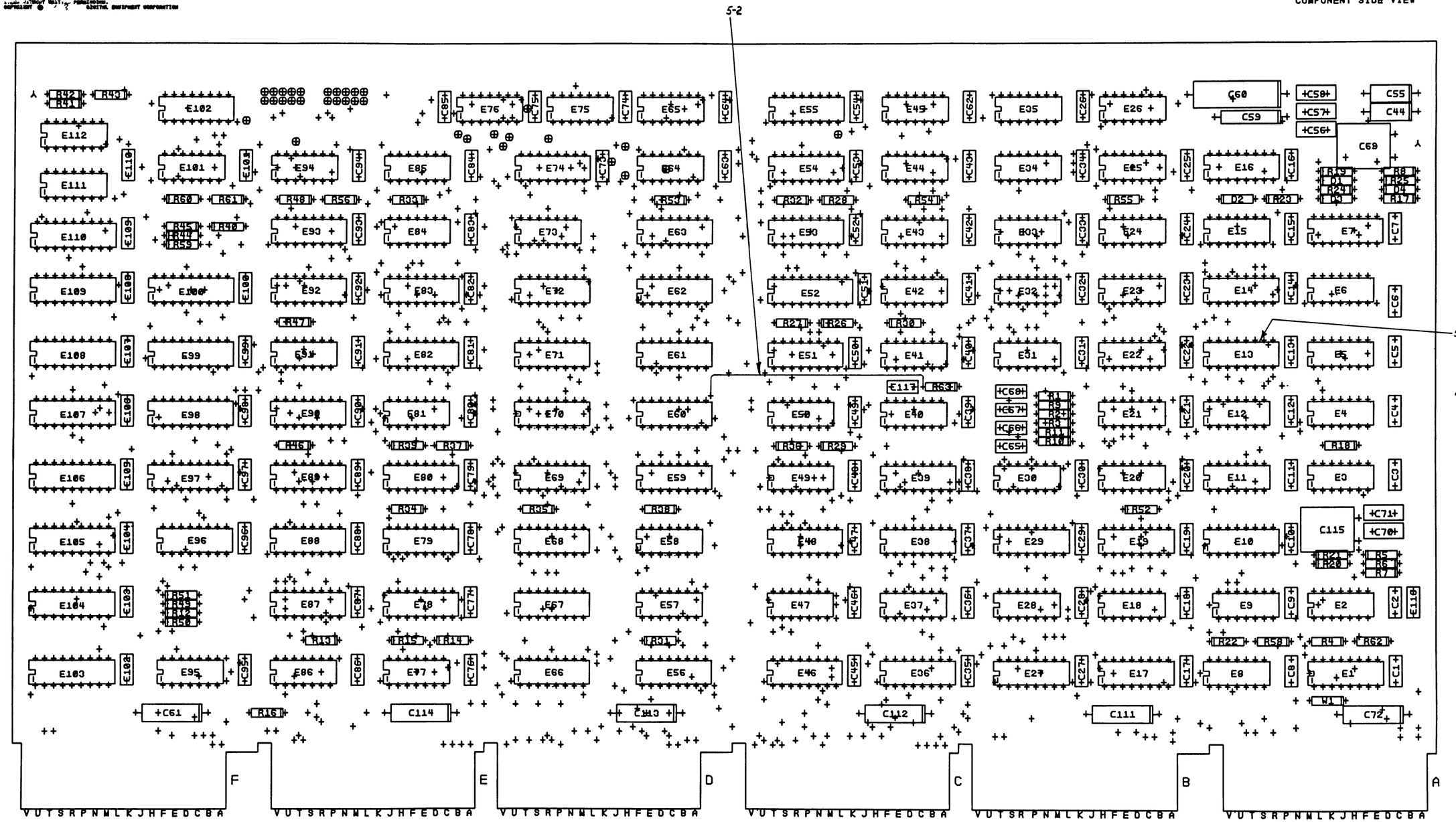

NOTES:

CHK	CHANGE NO	REV
	M8266-5	D
	REVISED FROM ...	
	M SULLIVAN	

ETCH REV. B
P.C. DESIGN DATA BASE REV. C

SIGNATURES	DATE
DRN. L GIAMMARINO	8-18-77
CHK'D. L GIAMMARINO	8-18-77
ENG. M SULLIVAN	19DEC77
PROJ. ENG. D BARRY	19DEC77
PROD. D BARRY	19DEC77

digital

TITLE KDIIE A CONTROL

SCALE 2-1	SIZE	CODE	NUMBER	REV
SHT. 1 OF 4	D	UA	M8266-0-0	D

NEXT HIGHER ASSY. B-DD-M8266-0

1 MS# 116,441

"THESE DRAWINGS AND SPECIFICATIONS, HEREIN, ARE THE PROPERTY OF DIGITAL EQUIPMENT CORPORATION AND SHALL NOT BE REPRODUCED OR COPIED OR USED IN WHOLE OR IN PART AS THE BASIS FOR THE MANUFACTURE OR SALE OF ITEMS WITHOUT WRITTEN PERMISSION."
COPYRIGHT © 1972 DIGITAL EQUIPMENT CORPORATION"

LAYER 1

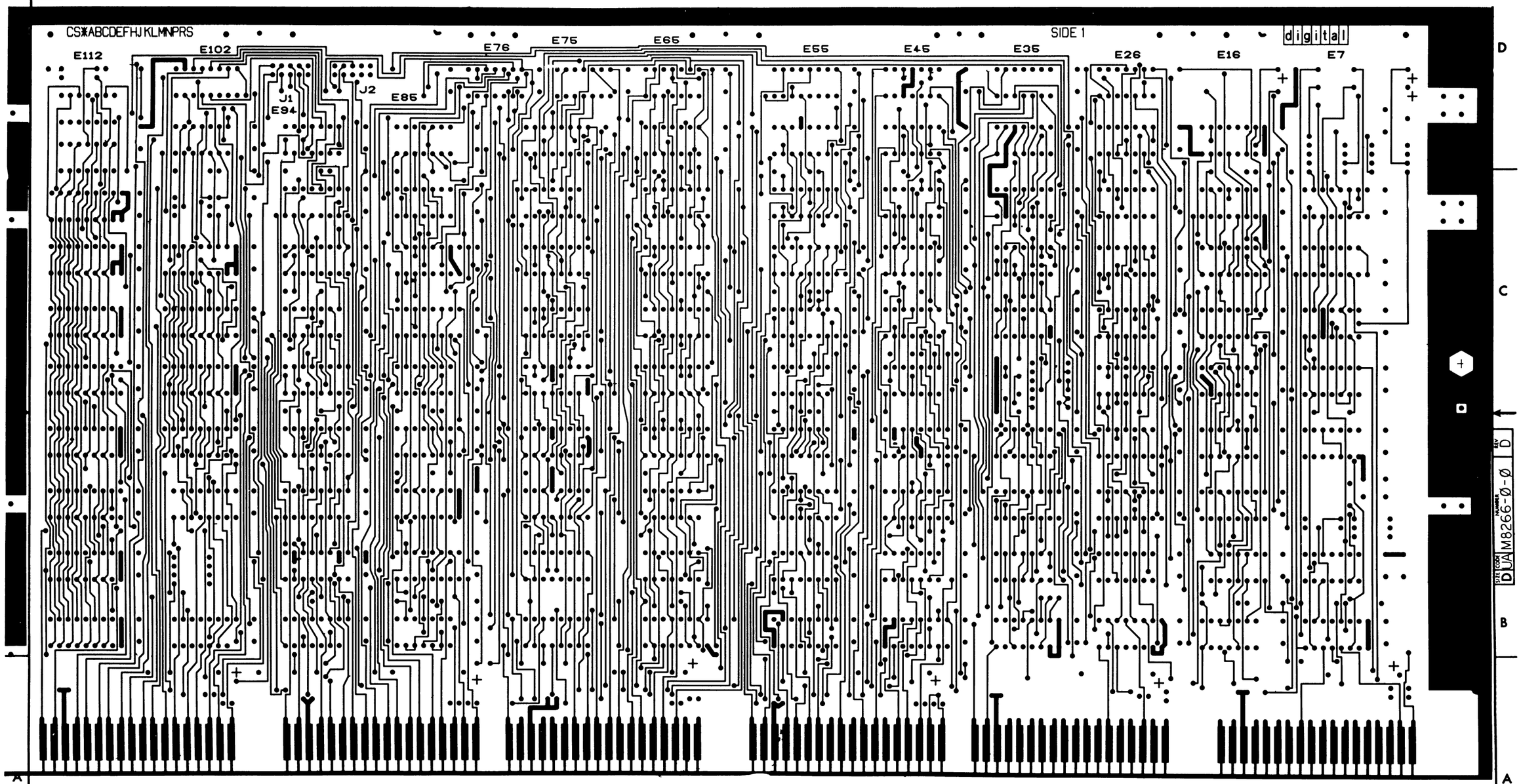

REVISIONS		
CHK	CHANGE NO	REV

TITLE	SIZE	CODE	NUMBER	REV.
KD11E-A CONTROL	D	UA	M8266-Ø-Ø	D
SCALE 2-1	SHEET 2 OF 4	DIST		

DEC FORM NO DRD 127

"THIS DRAWING AND SPECIFICATIONS, HEREIN, ARE THE PROPERTY OF DIGITAL EQUIPMENT CORPORATION AND SHALL NOT BE REPRODUCED OR COPIED OR USED IN WHOLE OR IN PART AS A BASIS FOR THE MANUFACTURE OR SALE OF ITEMS WITHOUT WRITTEN PERMISSION.
COPYRIGHT © 1975 DIGITAL EQUIPMENT CORPORATION"

LAYER 4

L4

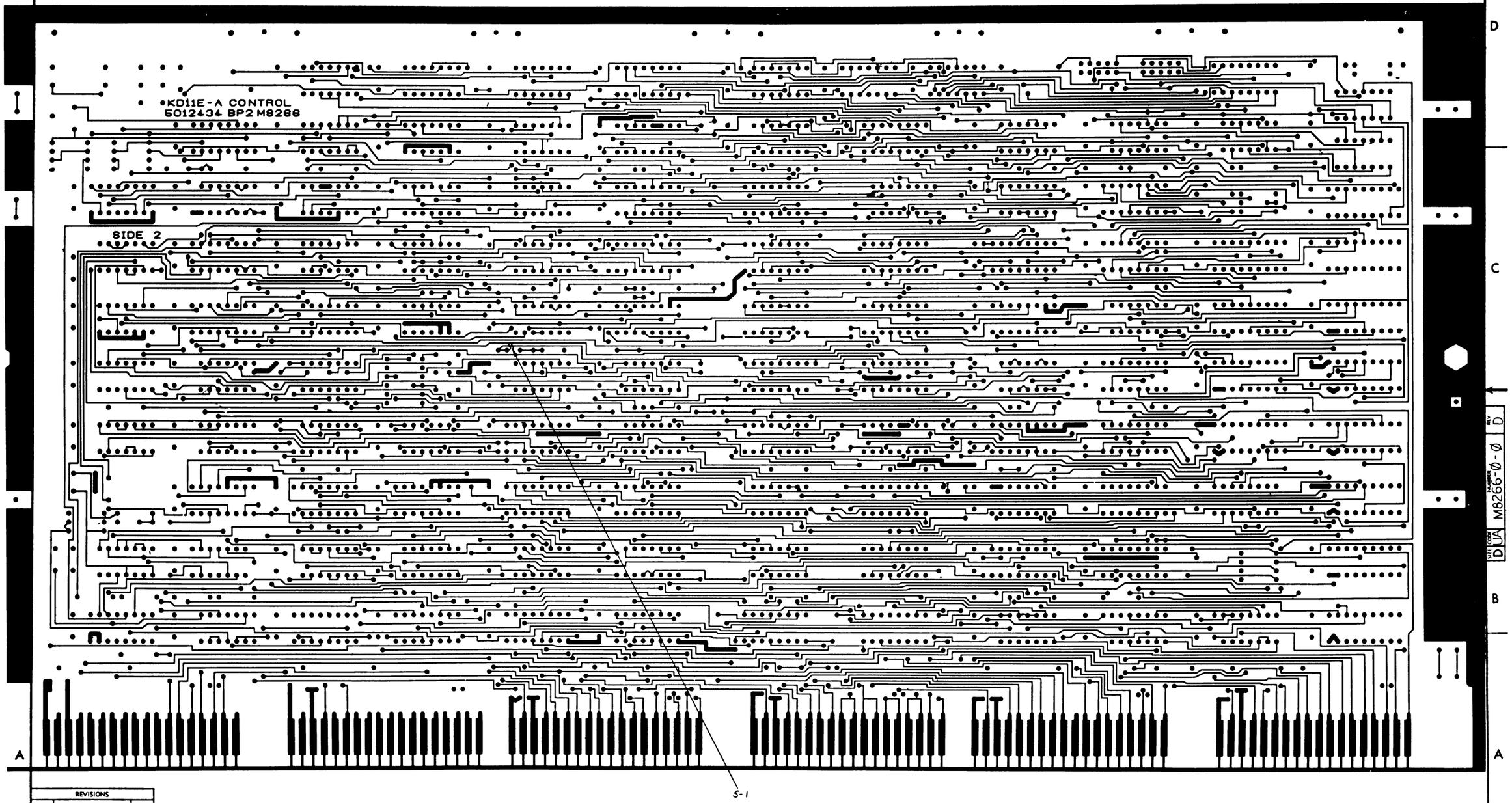

REVISIONS		
CHK	CHANGE NO	REV

TITLE	SIZE	CODE	NUMBER	REV
KD11E-A CONTROL	D	UA	M8266-0-0	D
SCALE 2-1	SHEET 3 OF 4		DIST	

"THIS DRAWING AND SPECIFICATIONS, HEREIN, ARE THE PROPERTY OF DIGITAL EQUIPMENT CORPORATION AND SHALL NOT BE REPRODUCED OR COPIED OR USED IN WHOLE OR IN PART AS THE BASIS FOR THE MANUFACTURE OR SALE OF ITEMS WITHOUT WRITTEN PERMISSION.
COPYRIGHT © 1978 DIGITAL EQUIPMENT CORPORATION"

REWORK INSTRUCTIONS
ECO #5

ETCH CUTS SIDE 2:

5-1. THE SLANTED ETCH RUN ABOVE AND TO THE LEFT OF E4Ø-14

WIRE ADDS SIDE 1:

5-2. FROM R63 AT C117 END TO PTH LOCATED ABOVE E6Ø-9

5-3. REMOVE E13 (P/N 1910651) AND REPLACE WITH E13 (P/N 1910957)

REVISIONS		
CHK	CHANGE NO	REV.

TITLE	SIZE	CODE	NUMBER	REV.
KDIIE-A CONTROL	D	UA	M8266-Ø-Ø	D
SCALE —/—/— SHEET 4 OF 4	DIST.			

LINE	ITEM	DOCUMENT NO.	PART NO.	DESCRIPTION	QTY	REFERENCE DESIGNATORS
1	1	D-MD-5012434-0-0	5012434-00	M8266	1	
2	2		1000016-00	100.0 MMF 100V 5%200PPM DM15S (10-00	3	C58,C67,C68
3	3		1000024-00	470.0 MMF 100V 5%200PPM DM15S (10-00	6	C56,C57,C65,C66,C71,C116
4	4		1000055-00	2200. MMF 250V 20% Y5S DISC $	2	C69,C115
5	5		1001476-00	10 MFD 35V10% 150D S.TA (10-00	1	C60
6	6		1001610-01	.01 MFD 100V OR 50V Z5U DISC/800PF MIN	93	C1-C43,C45-C54,C63,C64,
					CONT	C73-C110
7	7		1004812-00	15 MFD 20V 10% 150D S.TA (10-00	1	C59
8	8		1005306-00	6.8MFD 35V 10% 150D S.TA (10-00	6	C72,C111-C114,C61
9	9		1009964-00	.68 MFD 35V 10% 150D S.TA $	2	C44,C55
10	10		1000021-00	220.0 MMF 100V 5%200PPM DM15S (10-00	3	C62,C70,C117
11	11		1100114-00	D 664 QS\75PCB PIV= 25V SP	4	D1-D4
12	12		1300202-00	47 1/4W 5% CC (13-00	6	R3,R4,R7,R11,R21,R63
13	13		1300250-00	150 1/4W 5% CC (13-00	5	R10,R17,R18,R52,R1
14	14		1300271-00	220 1/4W 5% CC (13-00	1	R62
15	15		1300309-00	390 1/4W 5% CC (13-00	12	R40-R48,R60,R54,R61
16	16		1300316-00	470 1/4W 5% CC (13-00	20	R26-R31,R33-R39,R49-R51,R53,
					CONT	R56,R55,R9
17	17		1300365-00	1 K 1/4W 5% CC (13-00	5	R12,R32,R20,R59,R58
18	18		1300479-00	10 K 1/4W 5% CC (13-00	1	R24
19	19		1302394-00	30 K 1/4W 5% CC (13-00	5	R8,R19,R23,R25,R5
20	20		1311422-00	178 1/4W 1% RN55D-F 100PPM (13-00	5	R13-R16,R22
21	21		1301401-00	750 1/4W 5% CC (13-00	1	R6
22	22		1213506-00	HEADER 24POS RT ANGLE W/3 SIDED HOOD	2	J1,J2
23	23		1905547-00	DEC 7474 FF-D DUAL,EDGE TRIGGER,15MHZ	5	E5,E12,E31,E32,E34
24	24		1905575-00	7400 NAND GATE-QUAD 2IN	5	E3,E15,E18,E28,E86
25	25		1905587-00	DEC 7473 FF-JK DUAL,MASTER SLAVE,10MHZ	2	E24,E45
26	26		1909004-00	DEC 7402 NOR GATE-QUAD 2IN	3	E22,E23,E43
27	27		1909705-00	DEC 8881-INAND GATE-QUAD 2IN,OPN COLL.	2	E8,E77
28	28		1909713-00	DEC 8815 NOR GATE-DUAL 4IN 14	2	E4,E30

REVISION HISTORY			VARIATIONS FOR THIS ASSY.
CHK	ECO NO	REV	
PG	00005	D	00

FIRST USED ON:

MADE BY:	R.BARILONE	DATE: 24-MAR-78
CHECKED:	L.GIAMMARINO	DATE: 24-MAR-78
DSN.ENG.:	M.SULLIVAN	DATE: 24-MAR-78
PROD.:	B.KING	DATE: 24-MAR-78
RESP.ENG.:	M.SULLAVAN	DATE: 24-MAR-78

DIGITAL EQUIPMENT CORPORATION
MAYNARD, MASSACHUSETTS

TITLE
PARTS LIST

KD11E-A CONTROL

SIZE	CODE	DOCUMENT NUMBER	REV
K	PL	M8266-0-DBP	D

EDIT# 5

ASSY.NO.: D-UA-M8266-0-0

*THIS DRAWING AND SPECIFICATIONS HEREIN, ARE THE PROPERTY OF DIGITAL EQUIPMENT CORPORATION AND SHALL NOT BE REPRODUCED OR COPIED OR USED IN WHOLE OR IN PART AS THE BASIS FOR THE MANUFACTURE OR SALE OF ITEMS WITHOUT WRITTEN PERMISSION.
COPYRIGHT 1978, DIGITAL EQUIPMENT CORPORATION *

LINE	ITEM	DOCUMENT NO.	PART NO.	DESCRIPTION	QTY	REFERENCE DESIGNATORS
29	29		1910533-00	74S03 NAND GATE-QUAD 2IN,OPN COLLECT	5	E41,E64,E65,E76,E94
30	30		1909930-00	7405 INVERTER GATE-HEX 1IN,OPEN COL	2	E91,E101
31	31		1910018-00	DEC 74193 COUNTER,SYNCHR. UP/DOWN	2	E78,E79
32	32		1911675-00	74S138 DECODER-THREE INPUT	1	E89
33	33		1910091-00	DEC 7437 NAND GATE-QUAD 2IN,BUFFER 14	1	E81
34	34		1910155-00	DEC 7408 AND GATE,POS.QUAD 2IN 14	2	E11,E50
35	35		1910436-00	DEC 74123 ONE SHOT-DUAL,RETRIGGERABLE	3	E16,E7,E14
36	36		1910532-00	74S00 NAND GATE-QUAD 2IN	6	E25,E37,E47,E84,E6,E35
37	37		1910534-00	74S04 INVERTER GATE-HEX 1IN	2	E111,E112
38	38		1910539-00	74S20 NAND GATE-DUAL 4INPUT	2	E57,E58
39	39		1910547-00	74S153 MUX 1 OF 4 (DUAL)	2	E46,E36
40	40		1910548-00	74S157 MUX 1 OF 2 (QUAD)	2	E10,E39
41	41		1910550-00	74S174 FF-D HEX	10	E19,E38,E66,E93,E71,E88,E90,
					CONT	E92,E96,E56
42	42		1910651-00	******** THIS ITEM IS NOT USED *********	0	
43	43		1910878-00	7427 NOR GATE-TRIPLE 3IN	1	E75
44	44		1910957-00	74S175 FF-D QUAD COMMON CLOCK	1	E48,E55,E67,E13
45	45		1911116-00	DEC 8837 RECEIVER,BUS,HEX,UNIBUS	2	E1,E17
46	46		1911324-00	7414 NAND GATE-HEX 1IN SCHMITT TRIG	1	E21
47	47		1911469-00	DEC 8640 RECEIVER,BUS,QUAD,UNIBUS,Q-BU	1	E9
48	48		1911579-00	8641 TRANSCEIVER,BUS,QUAD,UNIBUS	1	E27
49	49		1911637-00	74132 NAND GATE-QUAD 2 IN SCHMITT TR	2	E2,E42
50	50		1912388-00	74S02 NOR GATE-QUAD 2IN,POS	3	E20,E73,E95
51	51		1912746-00	DEC 74S37 NAND GATE-QUAD 2IN	1	E26
52	52		1910544-00	74S74 FF-D DUAL,EDGE TRIGGER	2	E33,E49
53	53		1910536-00	74S10 NAND GATE-TRIPLE 3IN	2	E40,E85
54	54		1913340-00	74S32 OR GATE QUAD 2IN	1	E44
55	55		23106A1-00	A1-07 PROM,	1	E51
56	56		23160A2-00	A2-05 $	1	E29
57	57		23175A2-00	A2-02,A2-03,A2-04 $	1	E53
58	58		23162A2-00	A2-05	1	E54
59	59		23174A2-00	A2-02,A2-03,A2-04	1	E59
60	60		23173A2-00	A2-02,A2-03,A2-04	1	E60
61	61		23161A2-00	A2-05	1	E61
62	62		23170A2-00	A2-02,A2-03,A2-04	1	E62
63	63		23176A2-00	A2-02,A2-03,A2-04	1	E63
64	64		23014A9-00	A9-01	1	E68
65	65		23172A2-00	A2-02,A2-03,A2-04	1	E69
66	66		23349A9-00	A9-04	1	E70
67	67		23A22A2-00	A2-02,A2-03	1	E72
68	68		23110A1-00	A1-03,A1-05 PROM,	1	E74
69	69		23163A2-00	A2-05 $	1	E80
70	70		23108A1-00	A1-07 PROm,	1	E82
71	71		23107A1-00	A1-07 PROM,	1	E83
72	72		23109A1-00	A1-07 PROM,	1	E87
73	73		23022F1-00	F1-01 $	1	E97
74	74		23023F1-00	F1-01 $	1	E98
75	75		23021F1-00	F1-01 $	1	E99

LINE	ITEM	DOCUMENT NO.	PART NO.	DESCRIPTION	QTY	REFERENCE DESIGNATORS
76	76		23024F1-00	F1-01 $	1	E100
77	77		23011F1-00	F1-01 $	1	E103
78	78		23025F1-00	F1-01 $	1	E104
79	79		23027F1-00	F1-01 $	1	E105
80	80		23020F1-00	F1-01 $	1	E106
81	81		23019F1-00	F1-01 $	1	E107
82	82		23018F1-00	F1-01 $	1	E108
83	83		23017F1-00	F1-01 $	1	E109
84	84		23016F1-00	F1-01 $	1	E110
85	85		23177A1-00	A1-07 PROM,	1	E102
86	86		23013F1-00	F1-01 $	1	E52
87	87		9009185-00	JUMPER, WIRE, INSULATED, BLACK BAND	1	W1
88	88		9006732-00	EYELET, ROLLED FLANGE, .121 OD X .219 LG	12	
89	89		7417214-00	MODULE HANDLE REWORK	1	
90	90		1303114-00	1.0 K 1/4W 1% RN55D-F 100PPM (13-00	1	R2
91	91		9105740-55	WIRE(WRAP)30AWG UL1423 (91-00	A/R	
92	92		9009157-00	ADHESIVE, PERMABOND #101 $	A/R	

93 NOTE: 1001610-01 MAY BE SUBSTITUED BY 1001610-00.

DIGITAL EQUIPMENT CORPORATION MAYNARD, MASSACHUSETTS	TITLE PARTS LIST KD11E-A CONTROL	SIZE K	CODE PL	DOCUMENT NUMBER M8266-0-DBP	REV D

"THIS DRAWING AND SPECIFICATIONS, HEREIN ARE THE PROPERTY OF DIGITAL EQUIPMENT CORPORATION AND SHALL NOT BE REPRODUCED OR COPIED OR USED IN WHOLE OR IN PART AS THE BASIS FOR THE MANUFACTURE OR SALE OF ITEMS WITHOUT WRITTEN PERMISSION
COPYRIGHT © 1975 DIGITAL EQUIPMENT CORPORATION"

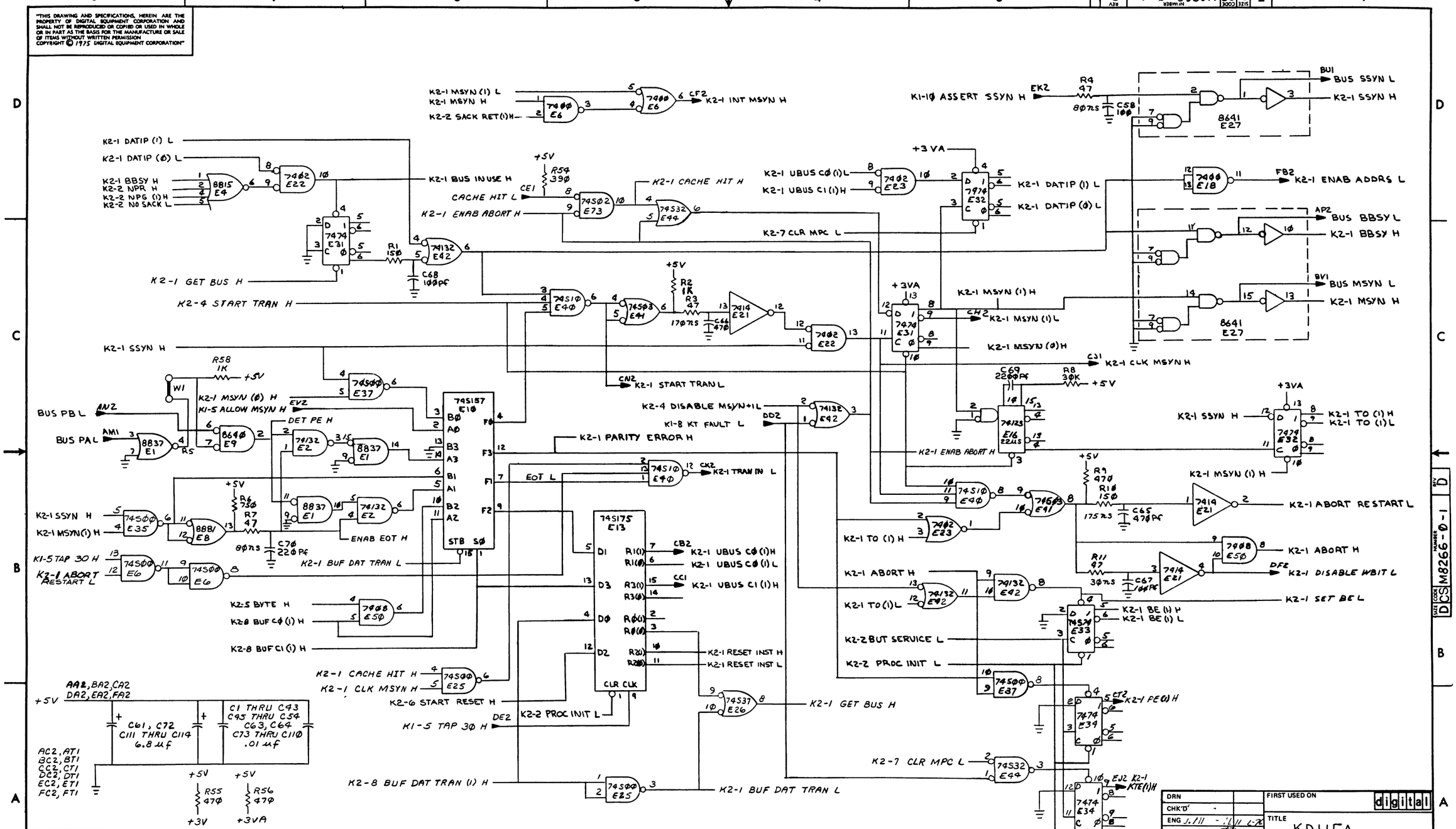

REVISIONS		
CHK	CHANGE NO	REV
G.D.	M8266-00001	A
	R BARRY	
	Richard Barry 9-MAR-77	

ETC	M8266-00002	B	LAC	M8266-00034	C	PC	M8266-00005	D
				Bud Gaudet 23 Aug 77			P. Sowa 23 MAR 78
	R BARRY			B. CRAMM			M. SULLIVAN
	Richard Barry 9-MAY-77			B Cramm			M Sullivan 13 APR 78

DRN	
CHK'D	
ENG	
PROJ ENG	
PROD	
NEXT HIGHER ASSY	
SCALE	—
SHEET 1	OF 10

FIRST USED ON

digital

TITLE
KD11EA
CONTROL (K2-1)

SIZE	CODE	NUMBER	REV
D	CS	M8266-0-1	D

DIST

DEC FORM NO DRD 138

"THIS DRAWING AND SPECIFICATIONS, HEREIN, ARE THE PROPERTY OF DIGITAL EQUIPMENT CORPORATION AND SHALL NOT BE REPRODUCED OR COPIED OR USED IN WHOLE OR IN PART AS THE BASIS FOR THE MANUFACTURE OR SALE OF ITEMS WITHOUT WRITTEN PERMISSION
COPYRIGHT © 1975 DIGITAL EQUIPMENT CORPORATION"

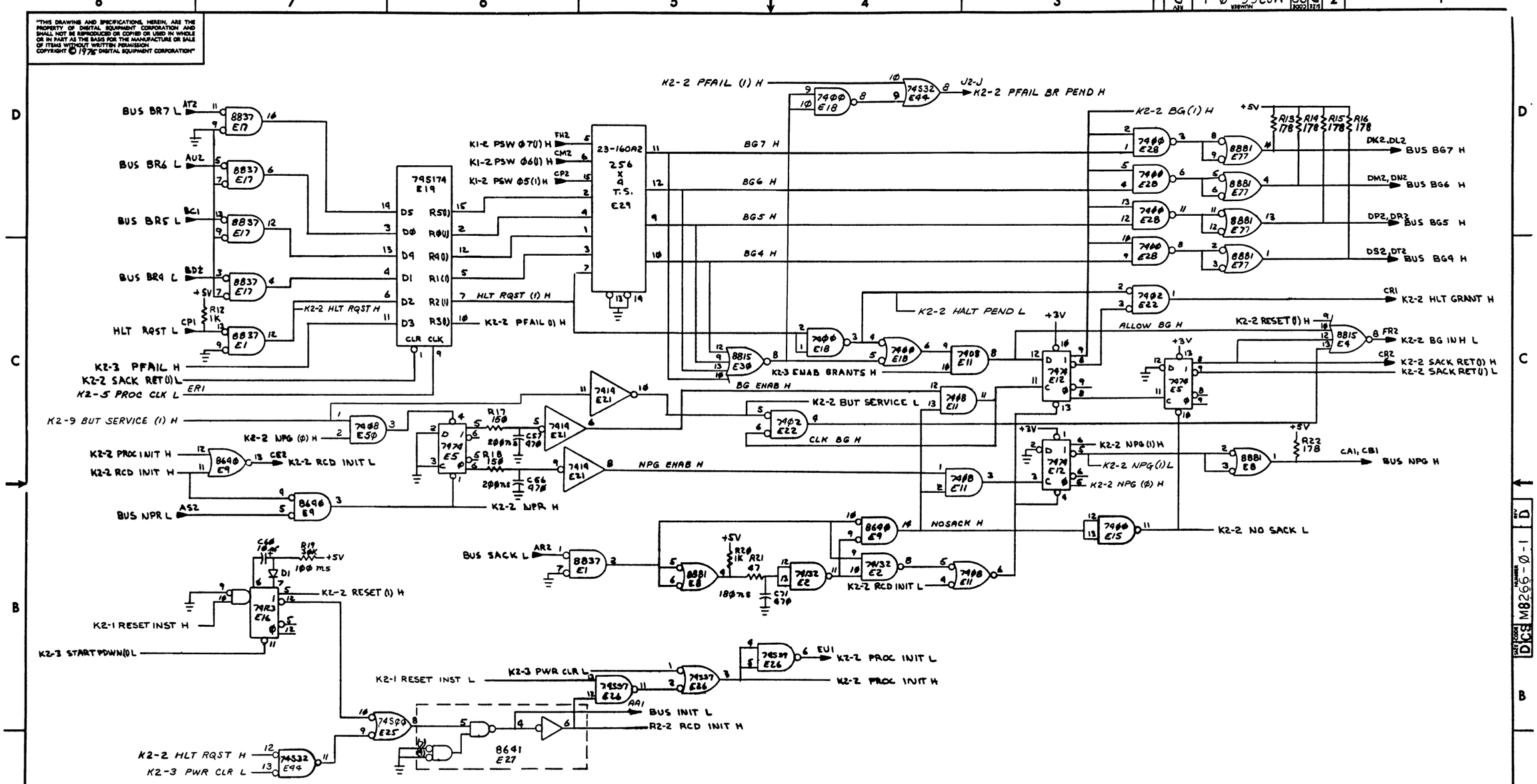

(PRIORIDY ARB)

REVISIONS		
CHK	CHANGE NO	REV

TITLE	SIZE	CODE	NUMBER	REV.
KDIIEA CONTROL (K2-2)	D	CS	M8266-Ø-1	D
SCALE —	SHEET 2 OF 10	DIST.		

DEC FORM NO. DRD 138

"THIS DRAWING AND SPECIFICATIONS, HEREIN, ARE THE PROPERTY OF DIGITAL EQUIPMENT CORPORATION AND SHALL NOT BE REPRODUCED OR COPIED OR USED IN WHOLE OR IN PART AS THE BASIS FOR THE MANUFACTURE OR SALE OF ITEMS WITHOUT WRITTEN PERMISSION. COPYRIGHT © 1975 DIGITAL EQUIPMENT CORPORATION"

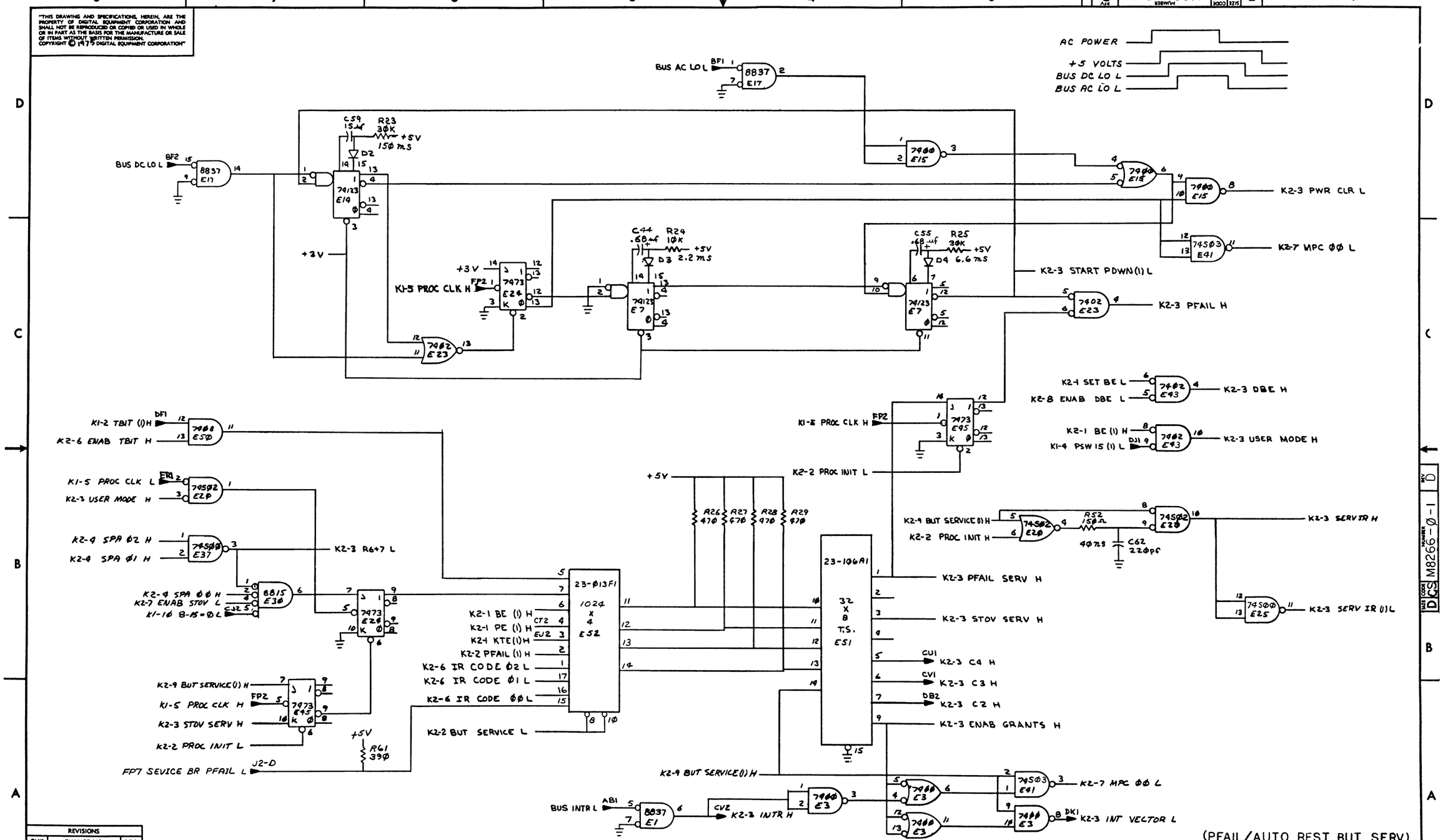

(PFAIL/AUTO REST BUT SERV)

REVISIONS		
CHK	CHANGE NO.	REV

TITLE	SIZE	CODE	NUMBER	REV.
KDIIEA CONTROL (K2-3)	D	CS	M8266-0-1	D
SCALE —	SHEET 3 OF 10	DIST.		

DEC FORM NO. MRD 138

"THIS DRAWING AND SPECIFICATIONS, HEREIN, ARE THE PROPERTY OF DIGITAL EQUIPMENT CORPORATION AND SHALL NOT BE REPRODUCED OR COPIED OR USED IN WHOLE OR IN PART AS THE BASIS FOR THE MANUFACTURE OR SALE OF ITEMS WITHOUT WRITTEN PERMISSION.
COPYRIGHT © 1975 DIGITAL EQUIPMENT CORPORATION"

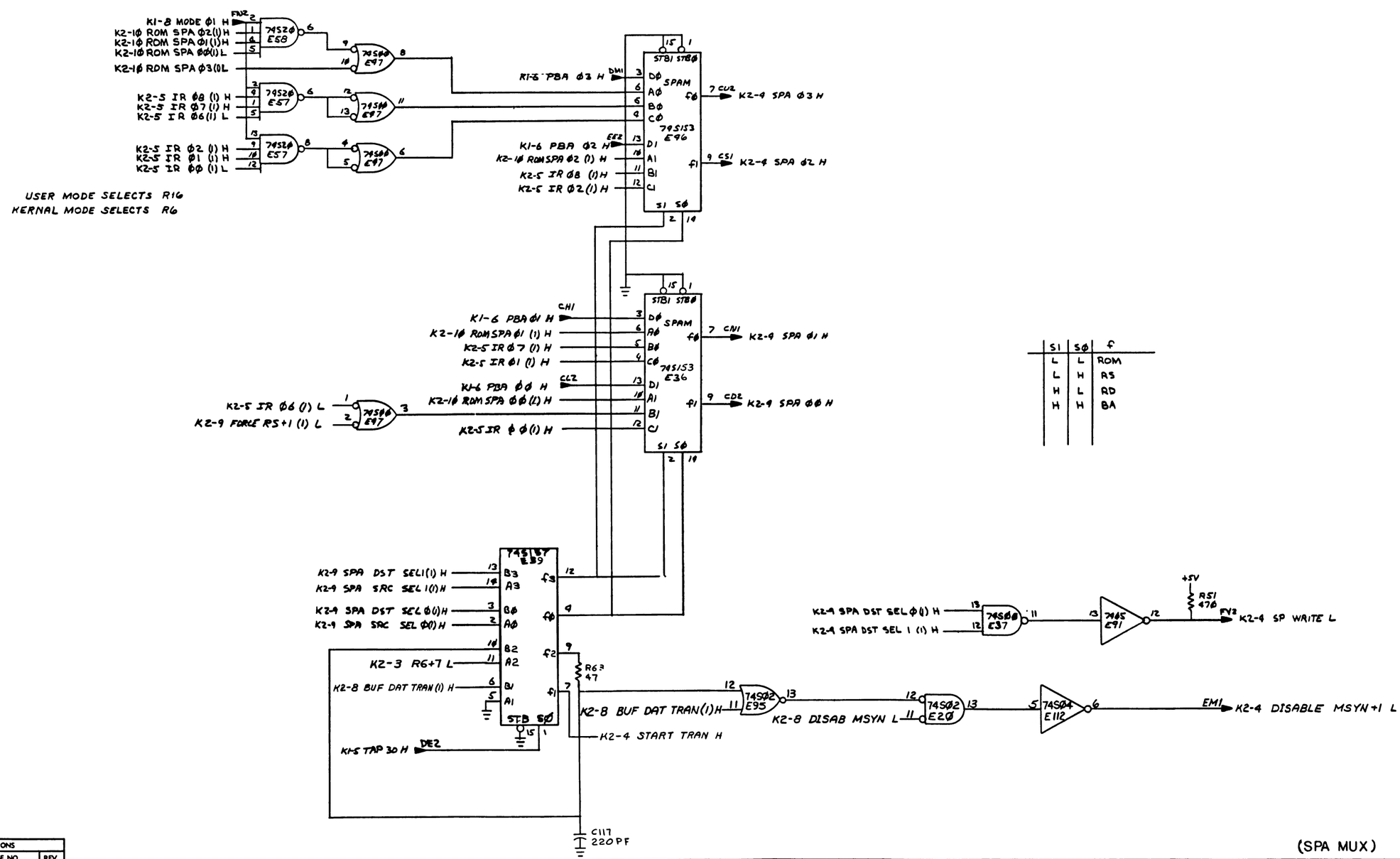

S1	SØ	F
L	L	ROM
L	H	RS
H	L	RD
H	H	BA

(SPA MUX)

REVISIONS		
CHK	CHANGE NO.	REV

TITLE	SIZE	CODE	NUMBER	REV.
KDIIEA CONTROL (K2-4)	D	CS	M8266-Ø-1	D
SCALE —	SHEET 4 OF 10		DIST.	

DEC FORM NO. PMD 138

"THIS DRAWING AND SPECIFICATIONS, HEREIN ARE THE PROPERTY OF DIGITAL EQUIPMENT CORPORATION AND SHALL NOT BE REPRODUCED OR COPIED OR USED IN WHOLE OR IN PART AS THE BASIS FOR THE MANUFACTURE OR SALE OF ITEMS WITHOUT WRITTEN PERMISSION
COPYRIGHT © 1975 DIGITAL EQUIPMENT CORPORATION"

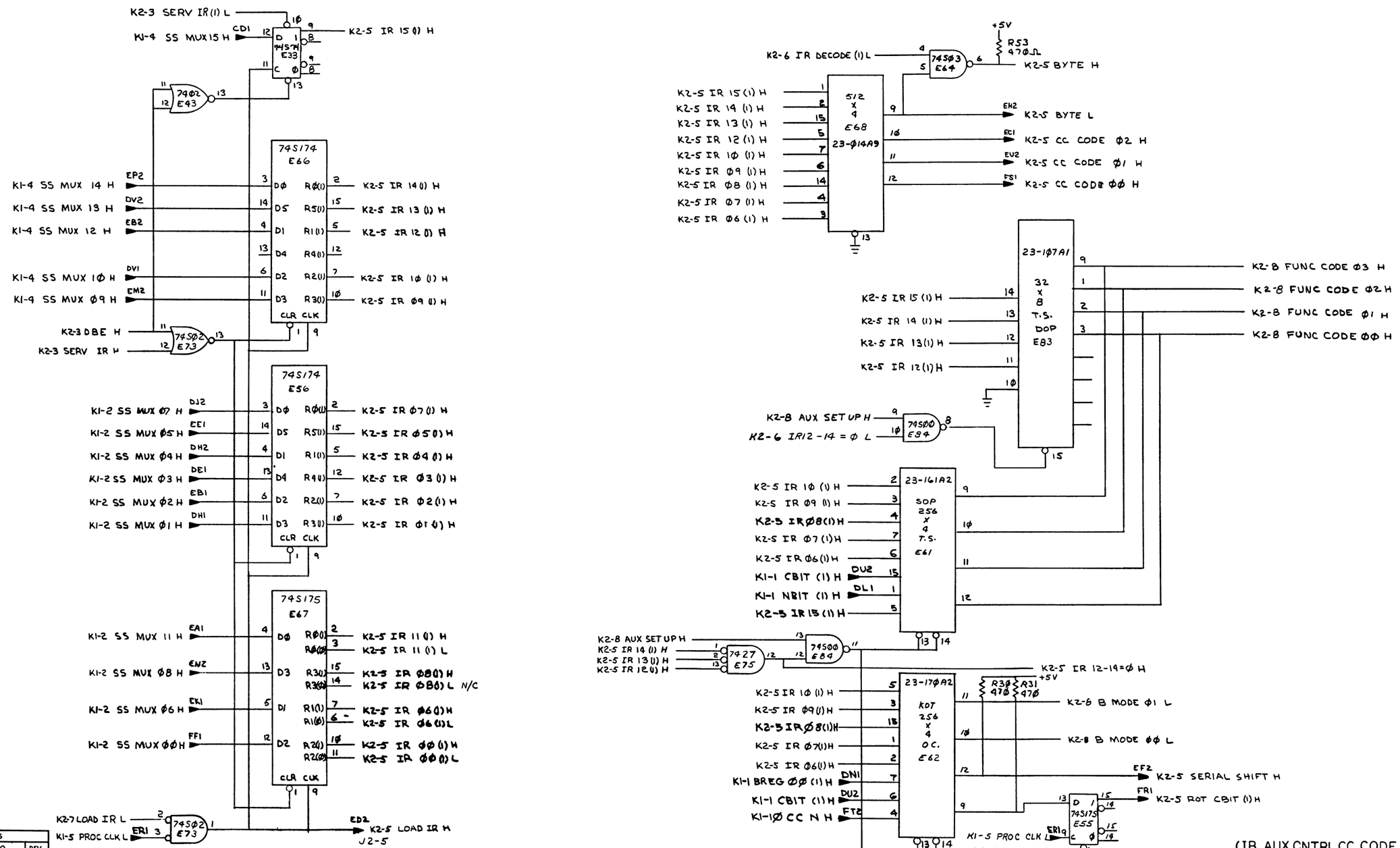

(IR, AUX CNTRL, CC CODE)

REVISIONS		
CHK	CHANGE NO	REV

TITLE	SIZE	CODE	NUMBER	REV.
KDIIEA CONTROL (K2-5)	D	CS	M8266-Ø-1	D
SCALE —	SHEET 5 OF 10	DIST		

DEC FORM NO DRD 138

"THIS DRAWING AND SPECIFICATIONS, HEREIN, ARE THE PROPERTY OF DIGITAL EQUIPMENT CORPORATION AND SHALL NOT BE REPRODUCED OR COPIED OR USED IN WHOLE OR IN PART AS THE BASIS FOR THE MANUFACTURE OR SALE OF ITEMS WITHOUT WRITTEN PERMISSION. COPYRIGHT © 1975 DIGITAL EQUIPMENT CORPORATION"

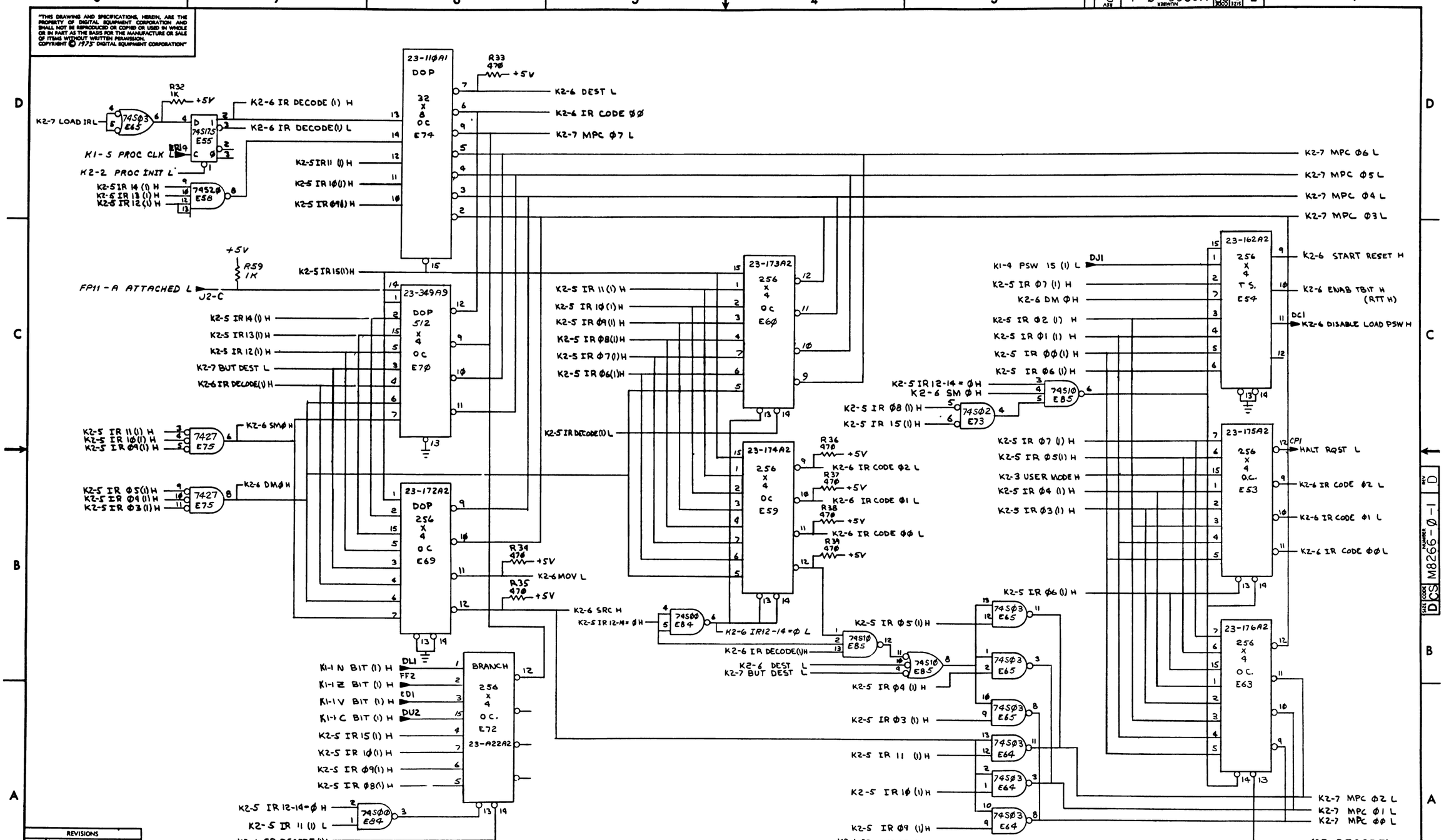

REVISIONS		
CHK	CHANGE NO	REV

TITLE	SIZE	CODE	NUMBER	REV.
KDIIFA CONTROL (K2-6)	D	CS	M8266-Ø-1	D
SCALE —	SHEET 6 OF 10	DIST.		

DEC FORM NO. DRD 138

"THIS DRAWING AND SPECIFICATIONS, HEREIN, ARE THE PROPERTY OF DIGITAL EQUIPMENT CORPORATION AND SHALL NOT BE REPRODUCED OR COPIED OR USED IN WHOLE OR IN PART AS THE BASIS FOR THE MANUFACTURE OR SALE OF ITEMS WITHOUT WRITTEN PERMISSION.
COPYRIGHT © 1975 DIGITAL EQUIPMENT CORPORATION"

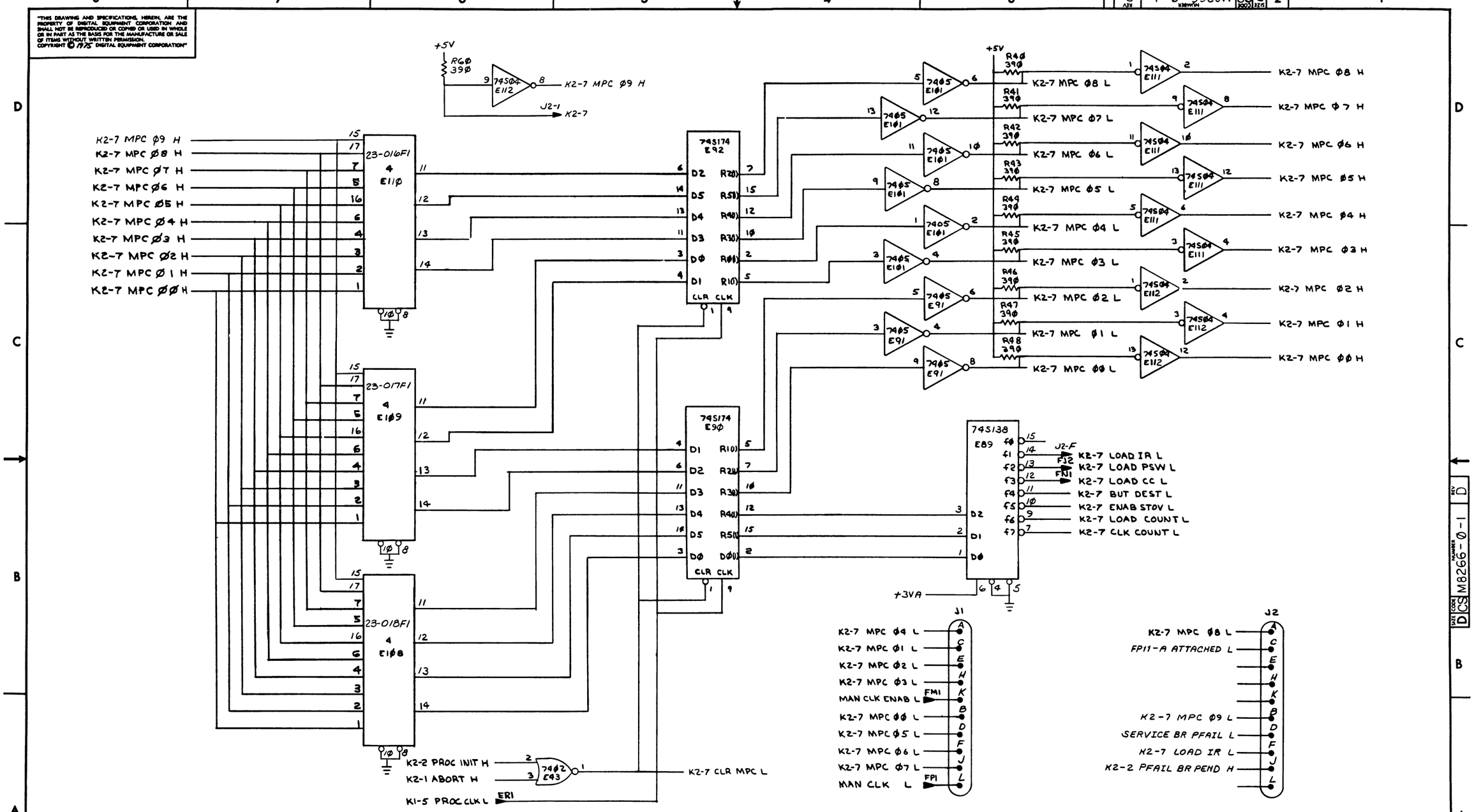

REVISIONS		
CHK	CHANGE NO	REV

(MPC BUT FIELD)

TITLE	SIZE	CODE	NUMBER	REV.
KDIIEA CONTROL (K2-7)	D	CS	M8266-Ø-1	D
SCALE —	SHEET 7 OF 10	DIST		

DEC FORM NO DRD 138

"THIS DRAWING AND SPECIFICATIONS, HEREIN, ARE THE PROPERTY OF DIGITAL EQUIPMENT CORPORATION AND SHALL NOT BE REPRODUCED OR COPIED OR USED IN WHOLE OR IN PART AS THE BASIS FOR THE MANUFACTURE OR SALE OF ITEMS WITHOUT WRITTEN PERMISSION.
COPYRIGHT © 1975 DIGITAL EQUIPMENT CORPORATION"

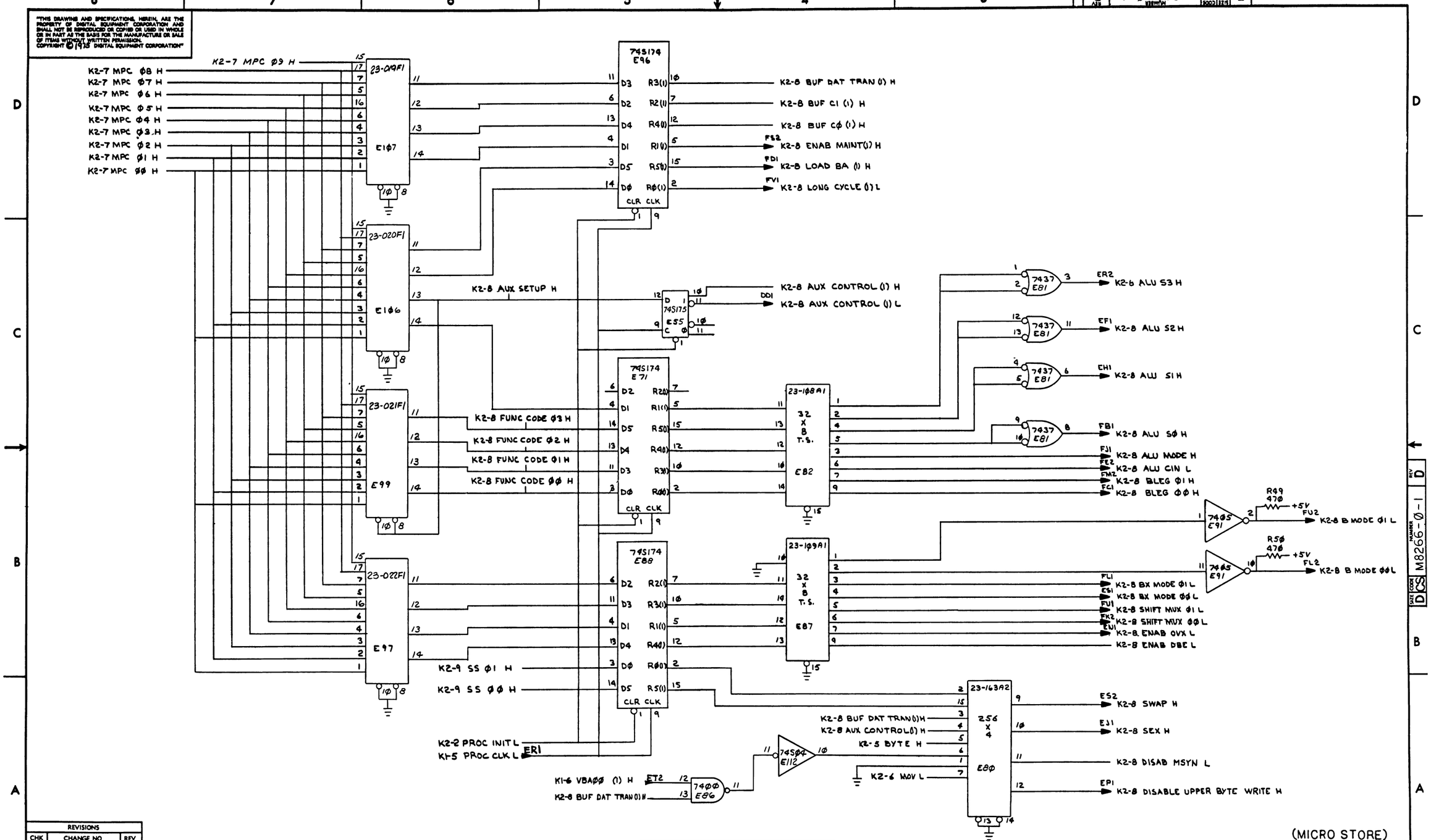

REVISIONS		
CHK	CHANGE NO	REV

(MICRO STORE)

TITLE	SIZE	CODE	NUMBER	REV.
KDIIEA CONTROL (K2-8)	D	CS	M8266-Ø-1	D
SCALE	SHEET 8 OF 10	DIST.		

DEC FORM NO. DRD 138

"THIS DRAWING AND SPECIFICATIONS, HEREIN, ARE THE PROPERTY OF DIGITAL EQUIPMENT CORPORATION AND SHALL NOT BE REPRODUCED OR COPIED OR USED IN WHOLE OR IN PART AS THE BASIS FOR THE MANUFACTURE OR SALE OF ITEMS WITHOUT WRITTEN PERMISSION
COPYRIGHT © 1975 DIGITAL EQUIPMENT CORPORATION"

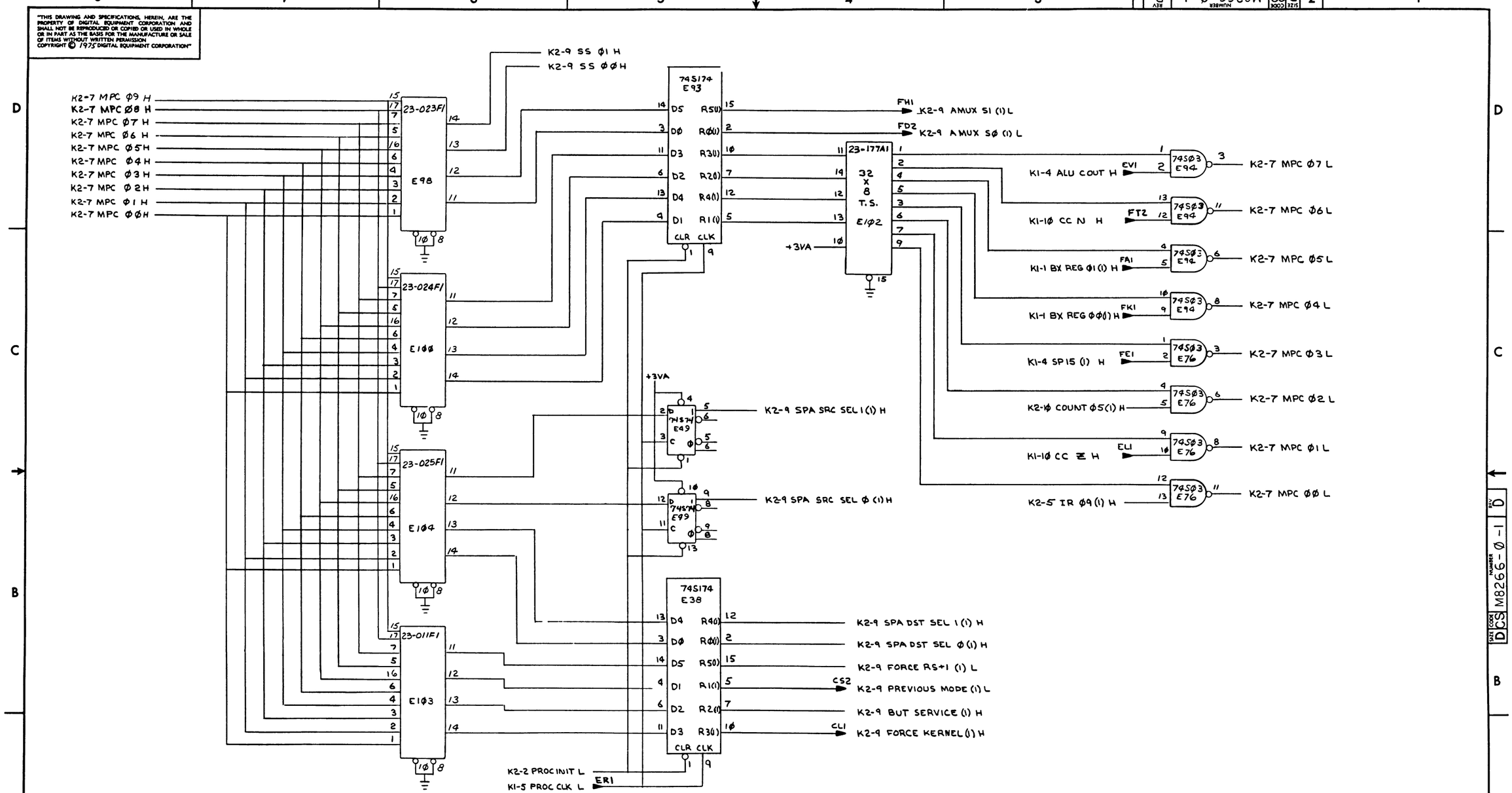

REVISIONS		
CHK	CHANGE NO	REV

(MICRO CODE)

TITLE	SIZE	CODE	NUMBER	REV.
KDIIEA CONTROL (K2-9)	D	CS	M8266-Ø-1	D
SCALE —	SHEET 9 OF 10		DIST	

DEC FORM NO DRD 138

"THIS DRAWING AND SPECIFICATIONS, HEREIN, ARE THE PROPERTY OF DIGITAL EQUIPMENT CORPORATION AND SHALL NOT BE REPRODUCED OR COPIED OR USED IN WHOLE OR IN PART AS THE BASIS FOR THE MANUFACTURE OR SALE OF ITEMS WITHOUT WRITTEN PERMISSION. COPYRIGHT © 1975 DIGITAL EQUIPMENT CORPORATION"

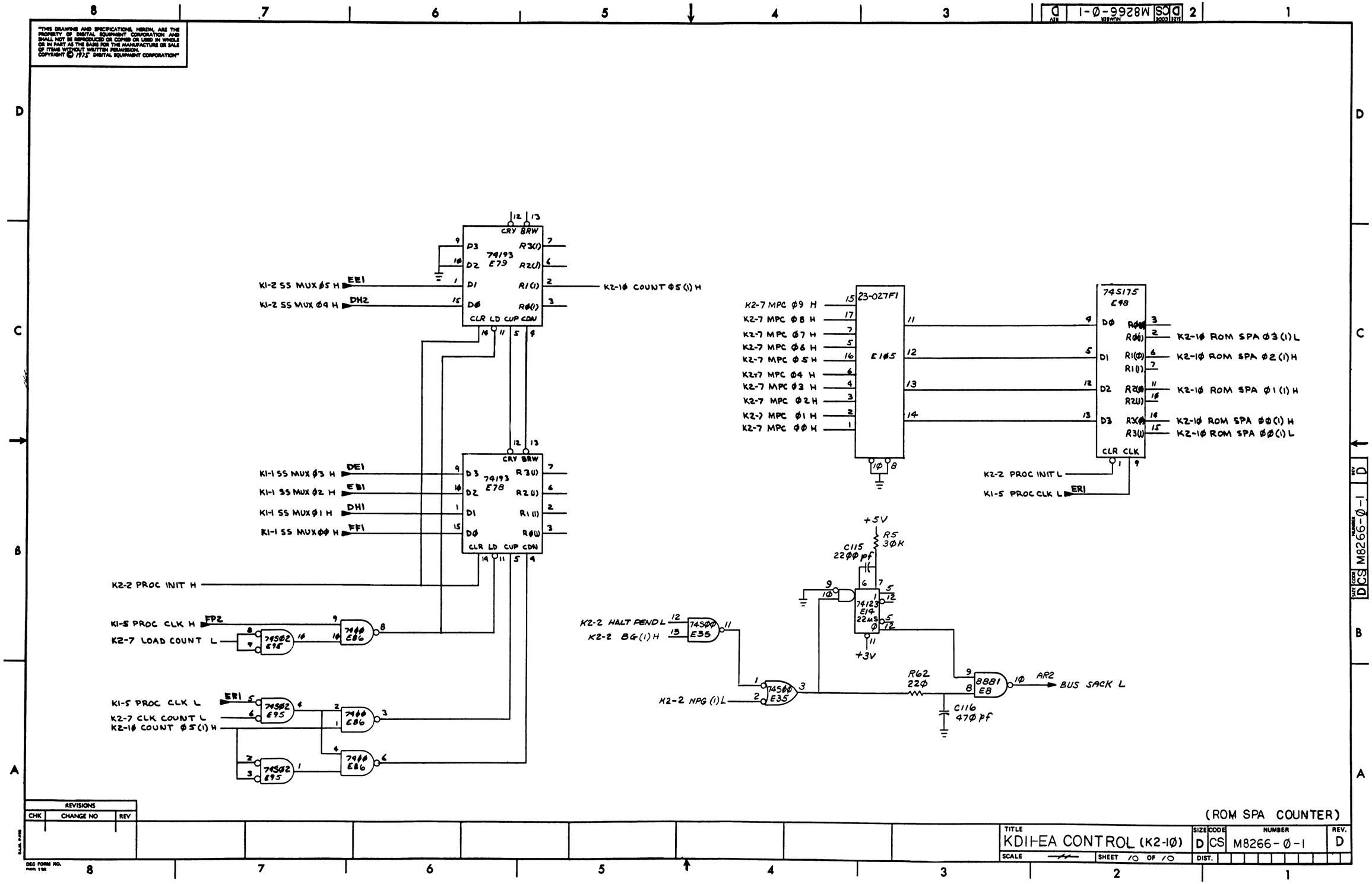

REVISIONS		
CHK	CHANGE NO	REV

(ROM SPA COUNTER)

TITLE	SIZE	CODE	NUMBER	REV.
KDIIEA CONTROL (K2-1Ø)	D	CS	M8266-Ø-1	D
SCALE —	SHEET 1Ø OF 1Ø	DIST.		

DEC FORM NO. FORM 1101

THIS DRAWING AND SPECIFICATIONS, HEREIN, ARE THE PROPERTY OF DIGITAL EQUIPMENT CORPORATION AND SHALL NOT BE REPRODUCED OR COPIED OR USED IN WHOLE OR IN PART AS THE BASIS FOR THE MANUFACTURE OR SALE OF ITEMS WITHOUT WRITTEN PERMISSION.
COPYRIGHT © DIGITAL EQUIPMENT CORPORATION

COMPONENT SIDE VIEW

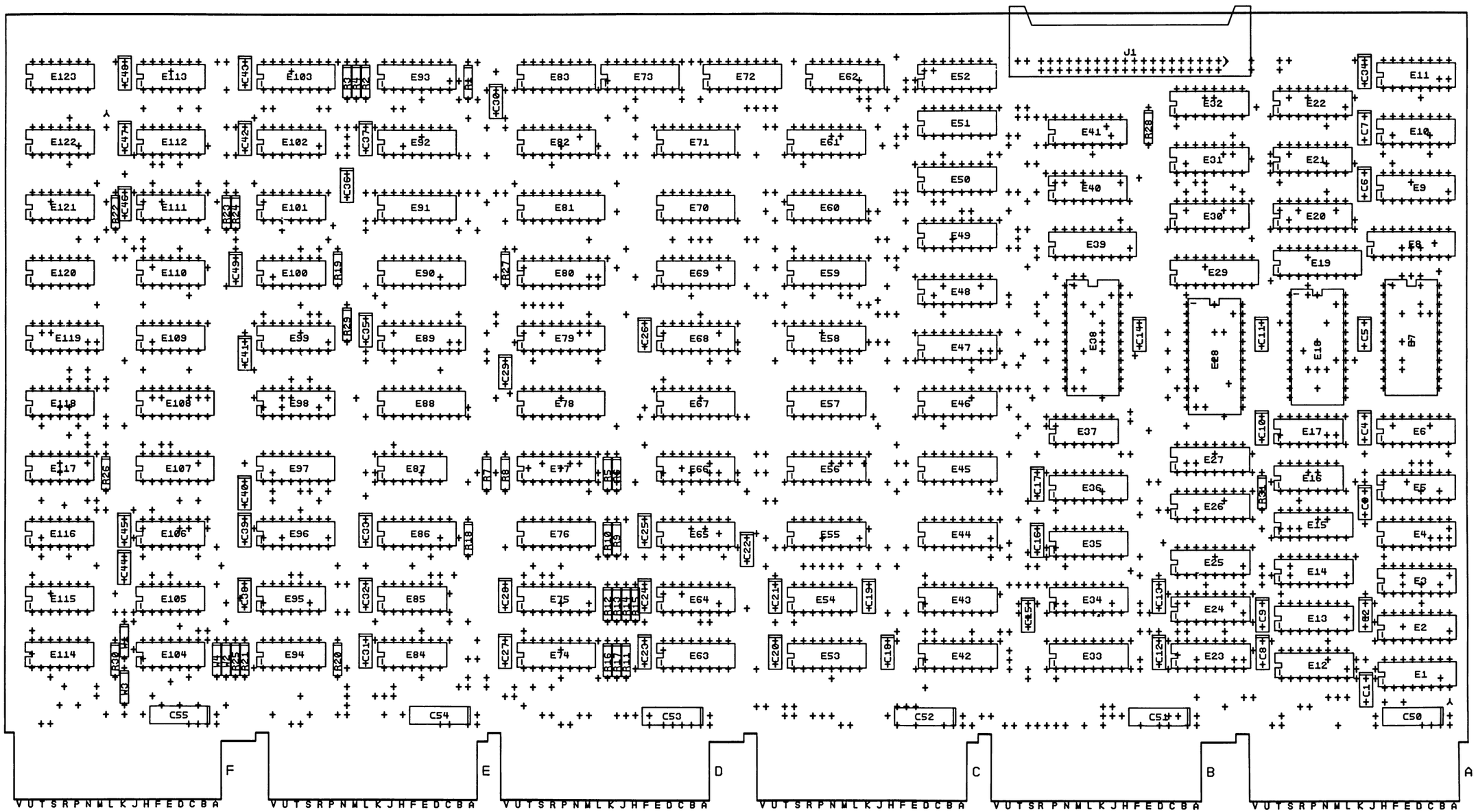

NOTES:

CHK	CHANGE NO	REV
	00002	B

SIGNATURES	DATE
DRN. D. BILODEAU	9-8-76
CHK'D.	4-11-77
ENG.	7-11-77
PROJ. ENG.	7-11-77
PROD.	
SCALE 2/1	
SHT. 1 OF 3	
NEXT HIGHER ASSY. B DD M8265-0-0	

ETCH REV. B-P1
P.C. DESIGN DATA BASE REV.

digital

TITLE KDII-EA DATA PATH

SIZE	CODE	NUMBER	REV
D	UA	M8265-0-0	B

MS# 116400

D UA M8265-0-0 B

THIS DRAWING AND SPECIFICATIONS HEREIN ARE THE PROPERTY OF DIGITAL EQUIPMENT CORPORATION AND SHALL NOT BE REPRODUCED OR COPIED OR USED IN WHOLE OR IN PART AS THE BASIS FOR THE MANUFACTURE OR SALE OF ITEMS WITHOUT WRITTEN PERMISSION
COPYRIGHT © 1977 DIGITAL EQUIPMENT CORPORATION"

LAYER 1

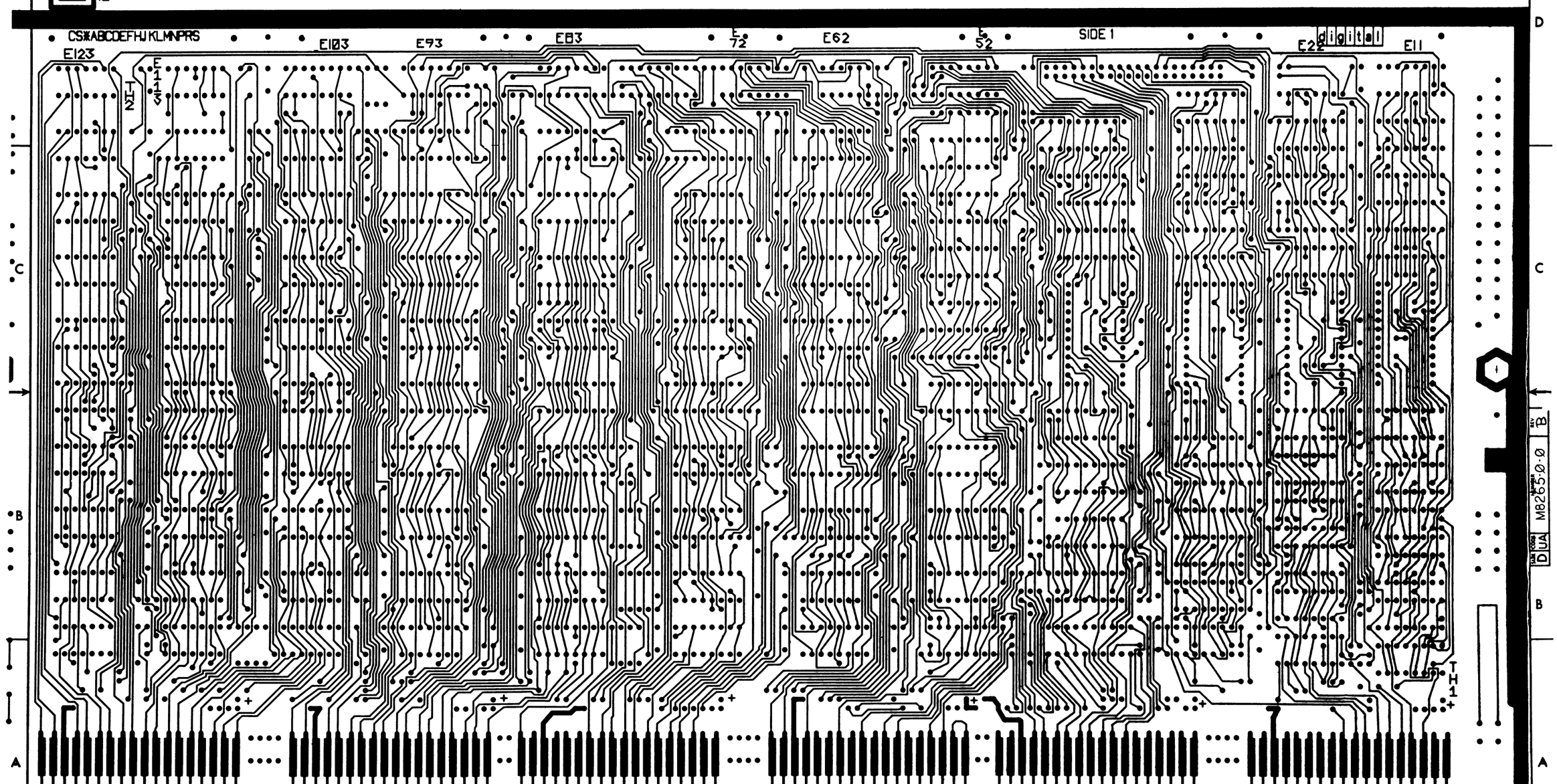

REVISIONS		
CHK	CHANGE NO	REV

TITLE	SIZE	CODE	NUMBER	REV.
KD11-EA DATA PATH	D	UA	M8265-0-0	B
SCALE 2/1	SHEET 2 OF 3		DIST	

DEC FORM NO DRD 137

THIS DRAWING AND SPECIFICATIONS HEREIN ARE THE PROPERTY OF DIGITAL EQUIPMENT CORPORATION AND SHALL NOT BE REPRODUCED OR COPIED OR USED IN WHOLE OR IN PART AS THE BASIS FOR THE MANUFACTURE OR SALE OF ITEMS WITHOUT WRITTEN PERMISSION
COPYRIGHT © 1977 DIGITAL EQUIPMENT CORPORATION

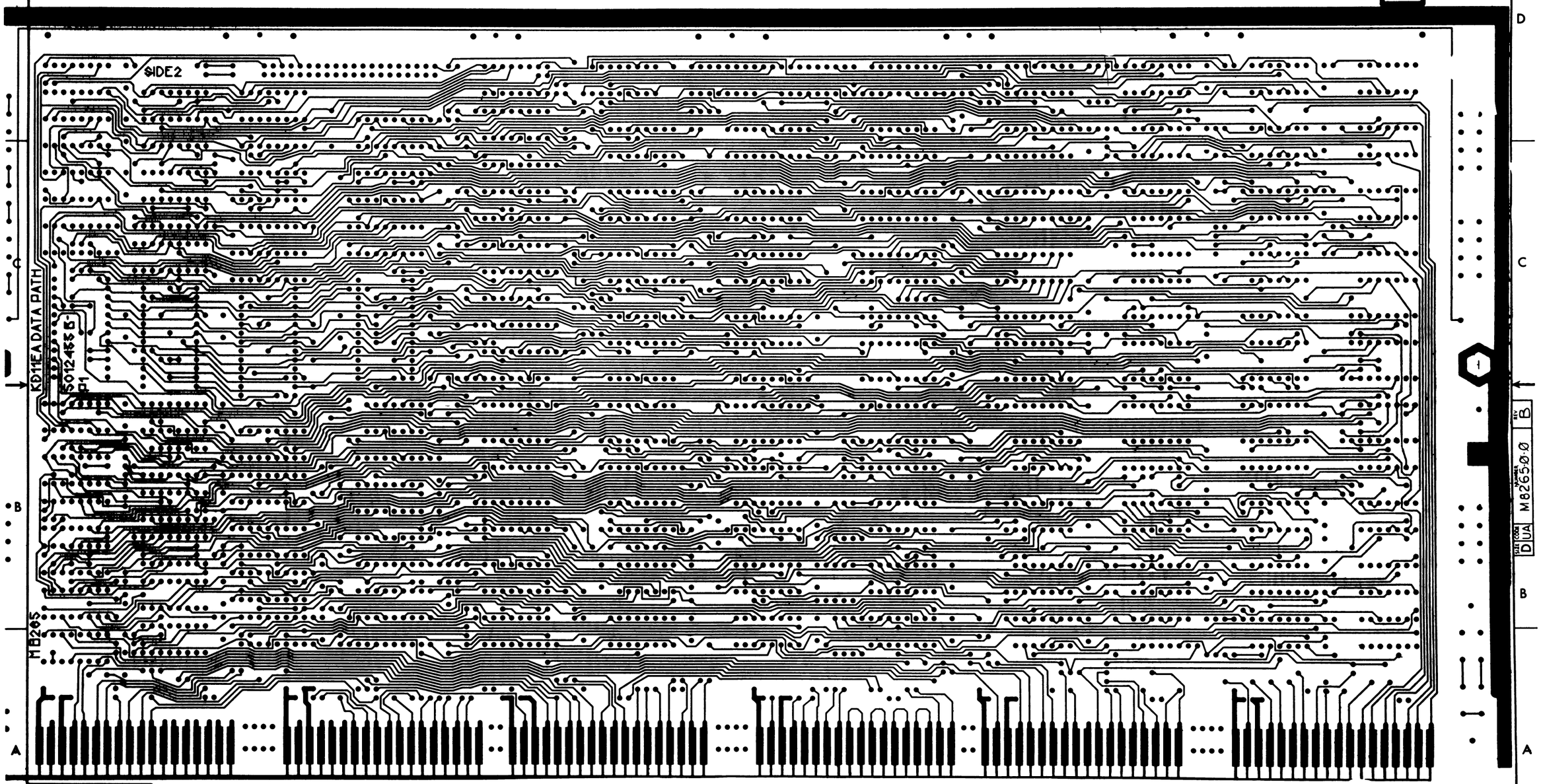

REVISIONS		
CHK	CHANGE NO	REV

TITLE	SIZE	CODE	NUMBER	REV.
KD11-EA DATA PATH	D	UA	M8265-0-0	B
SCALE 2/1 SHEET 3 OF 3	DIST			

DEC FORM NO 060 137

DIGITAL EQUIPMENT CORPORATION
PARTS LIST

MADE BY F. GAROFALO DATE 7 SEPT 76	CHECKED ROM FONTAINE DATE 7 SEPT 76	SECTION	
ENG M. Gillin DATE 7-18-77	PROD R. B. KING DATE 15 Jul 77	ISSUED SECTION	

NOTES:

ITEM NO.	DRAWING NO.	PART NO.	DESCRIPTION	QUANTITY / VARIATION M8265-Ø-Ø												REF DESIGNATION
1	D-ND-5012433-0-0	5012433	ETCHED BOARD	1												
2		1001610-00	CAPACITOR, .01 uf, 50V, 20% CER	48												C1 thru C48
3		1005306	CAPACITOR, 6.8 uf, 35V, 10%	6												C50 thru C55
4		1000021	CAPACITOR, 220 pf, 100V, 5%	1												C49
5		1300316	RESISTOR, 470 OHM, 1/4W, 5% CC	19												R1 thru R19
6		1300365	RESISTOR, 1K, 1/4W, 5% CC	8												R20 thru R23,R26 thru R29
7		1300202	RESISTOR, 47 OHM, 1/4W, 5% CC	1												R24
8		1300271	RESISTOR, 220 OHM, 1/4W, 5% CC	2												R25,R30
9		1300309	RESISTOR, 390 OHM 1/4W, 5% CC	1												R31
10		1210711-09	HANDLE, HEX MODULE	1												
11		1213506-01	RIGHT ANGLE HEADER	1												J1
12		1612463	DELAY LINE, 150 NS	1												E104
13		1911521	I.C. DEC 7432	1												E122
14		1905576	I.C..DEC 7410	1												E123
15		1909004	I.C. DEC 7402	3												E101,E102,E114
16		1909686	I.C. DEC 7404	1												E117
17		1910155	I.C. DEC 7408	1												E112
18		1905575	I.C. DEC 7400	1												E110
19		1911637	I.C. DEC 74132	1												E120
20		1905578	I.C. DEC 7430	2												E54 E87
21		1910091	I.C. DEC 7437	1												E116

E.C.O. NO.

"THIS DRAWING AND SPECIFICATIONS, HEREIN, ARE THE PROPERTY OF DIGITAL EQUIPMENT CORPORATION AND SHALL NOT BE REPRODUCED OR COPIED OR USED IN WHOLE OR IN PART AS THE BASIS FOR THE MANUFACTURE OR SALE OF ITEMS WITHOUT WRITTEN PERMISSION. COPYRIGHT © DIGITAL EQUIPMENT CORPORATION"

TITLE	ASSY NO.	SIZE	CODE	NUMBER	REV.
KD11E-A DATA PATH	D-UA-M8265-Ø-Ø	B	PL	M8265-Ø-Ø	B
	SHEET 1 OF 3	INSERTION PARTS LIST DATA BASE REV			

DRB 125

DIGITAL EQUIPMENT CORPORATION
PARTS LIST

MADE BY F. GAROFALO DATE 7 SEPT 76	CHECKED RON FONTAINE DATE 7 SEPT 76	SECTION
ENG M. Dull DATE 2-18-77	PROD R. B. KING DATE 15 Jan 77	ISSUED SECTION

NOTES:

ITEM NO.	DRAWING NO.	PART NO.	DESCRIPTION	QUANTITY / VARIATION M8265-Ø-Ø												REF DESIGNATION
22		1910544	I.C. DEC 74S74	2												E100,E109
23		1910224	I.C. DEC 7485	2												E61,E72
24		1910011	I.C. DEC 7486	1												E115
25		1911579	I.C. DEC 8641	9												E1.E12,E23,E42,E43,E53,E63 E64,E33
26		1909713	I.C. DEC 8815	2												E17,E37
27		1909937	I.C. DEC 74153	3												E6,E9,E119
28		1912389	I.C. DEC 74SØ8	1												E106
29		1910655	I.C. DEC 74157	5												E20,E30,E40,E92 E93
30		1910652	I.C. DEC 74174	4												E50,E51,E62,E73
31		1910651	I.C. DEC 74175	3												E82,E99,E103
32		1910623	I.C. DEC 74194	8												E10,E11,E21,E31,E22,E32,E41,E52
33		1909932-01	I.C. DEC 7483A	3												E45,E56,E66
34		1911271	I.C. DEC 74298	3												E44,E55,E65
35		1909849	I.C. DEC 74HØ1	1												E111
36		1910532	I.C. DEC 74SØØ	3												E95,E113,E118
37		1910534	I.C. DEC 74SØ4	2												E105,E16
38		1910547	I.C. DEC 74S153	4												E13,E14.E34,E35
39		1910548	I.C. DEC 74S157	7												E2,E24,E71,E91,E96,E98,E108
40		1910550	I.C. DEC 74S174	3												E47,E48,E49
41		1910531	I.C. DEC 74S181	4												E7,E18,E28,E38
42		1912097	I.C. DEC 74S182	1												E27

E.C.O. NO.

"THIS DRAWING AND SPECIFICATIONS, HEREIN, ARE THE PROPERTY OF DIGITAL EQUIPMENT CORPORATION AND SHALL NOT BE REPRODUCED OR COPIED OR USED IN WHOLE OR IN PART AS THE BASIS FOR THE MANUFACTURE OR SALE OF ITEMS WITHOUT WRITTEN PERMISSION. COPYRIGHT © DIGITAL EQUIPMENT CORPORATION"

TITLE	ASSY NO.	SIZE	CODE	NUMBER	REV.
KD11E-A DATA PATH	D-UA-M8265-Ø-Ø	B	PL	M8265-Ø-Ø	B
	SHEET 2 OF 3	INSERTION PARTS LIST DATA BASE REV			

DRB 125

DIGITAL EQUIPMENT CORPORATION
PARTS LIST

MADE BY	F. GAROFALO	CHECKED	RON FONTAINE
DATE	7 SEPT 76	DATE	7 SEPT 76
ENG	M. Fulton	PROD	R. B. KING
DATE	7-18-77	DATE	15 JUL 77

SECTION

ISSUED SECTION

NOTES:

ITEM NO.	DRAWING NO.	PART NO.	DESCRIPTION	QUANTITY / VARIATION M8265-Ø-Ø												REF DESIGNATION
43		1912646	I.C. DEC 74LS253	8												E57 thru E60,E67 thru E70
44		1912586	I.C. DEC 85S68	11												E8,E19,E29,E39,E78 thru E81,E88,E89,E90
45		1910536	I.C. DEC 74S1Ø	1												E94
46		1910957	I.C. DEC 74S175	1												E97
47		1910537	I.C. DEC 74S11	1												E121
48		23169A2	I.C. DEC 256 x 4 BIT ROM OC	2												E74,E75
49		23168A2	I.C. DEC 256 x 4 BIT ROM OC	1												E76
50		23167A2	I.C. DEC 256 x 4 BIT ROM OC	1												E77
51		23165A2	I.C. DEC 256 x 4 BIT ROM OC	1												E83
52		23166A2	I.C. DEC 256 x 4 BIT ROM OC	1												E86
53		23164A2	I.C. DEC 256 x 4 ROM TS	1												E107
54		1912746	I.C. DEC 74S37	2												E84,E85
55		1912660	I.C. DEC 74S253	8												E3,E4 E5 E15,E25,E26,E36.E46
56		9000024-01	EYELET (HANDLE)	11												
57		9009185	WIRE, JUMPER (INSULATED)	2												W1,W2

E.C.O. NO.

"THIS DRAWING AND SPECIFICATIONS, HEREIN, ARE THE PROPERTY OF DIGITAL EQUIPMENT CORPORATION AND SHALL NOT BE REPRODUCED OR COPIED OR USED IN WHOLE OR IN PART AS THE BASIS FOR THE MANUFACTURE OR SALE OF ITEMS WITHOUT WRITTEN PERMISSION. COPYRIGHT © DIGITAL EQUIPMENT CORPORATION"

TITLE	ASSY NO.	SIZE	CODE	NUMBER	REV.
KD11E-A DATA PATH	D-UA-M8265-Ø-Ø	B	PL	M8265-Ø-Ø	B
	SHEET 3 OF 3	INSERTION PARTS LIST DATA BASE REV			

DRB 125

"THIS DRAWING AND SPECIFICATIONS, HEREIN ARE THE PROPERTY OF DIGITAL EQUIPMENT CORPORATION AND SHALL NOT BE REPRODUCED OR COPIED OR USED IN WHOLE OR IN PART AS THE BASIS FOR THE MANUFACTURE OR SALE OF ITEMS WITHOUT WRITTEN PERMISSION
COPYRIGHT © 1975 DIGITAL EQUIPMENT CORPORATION"

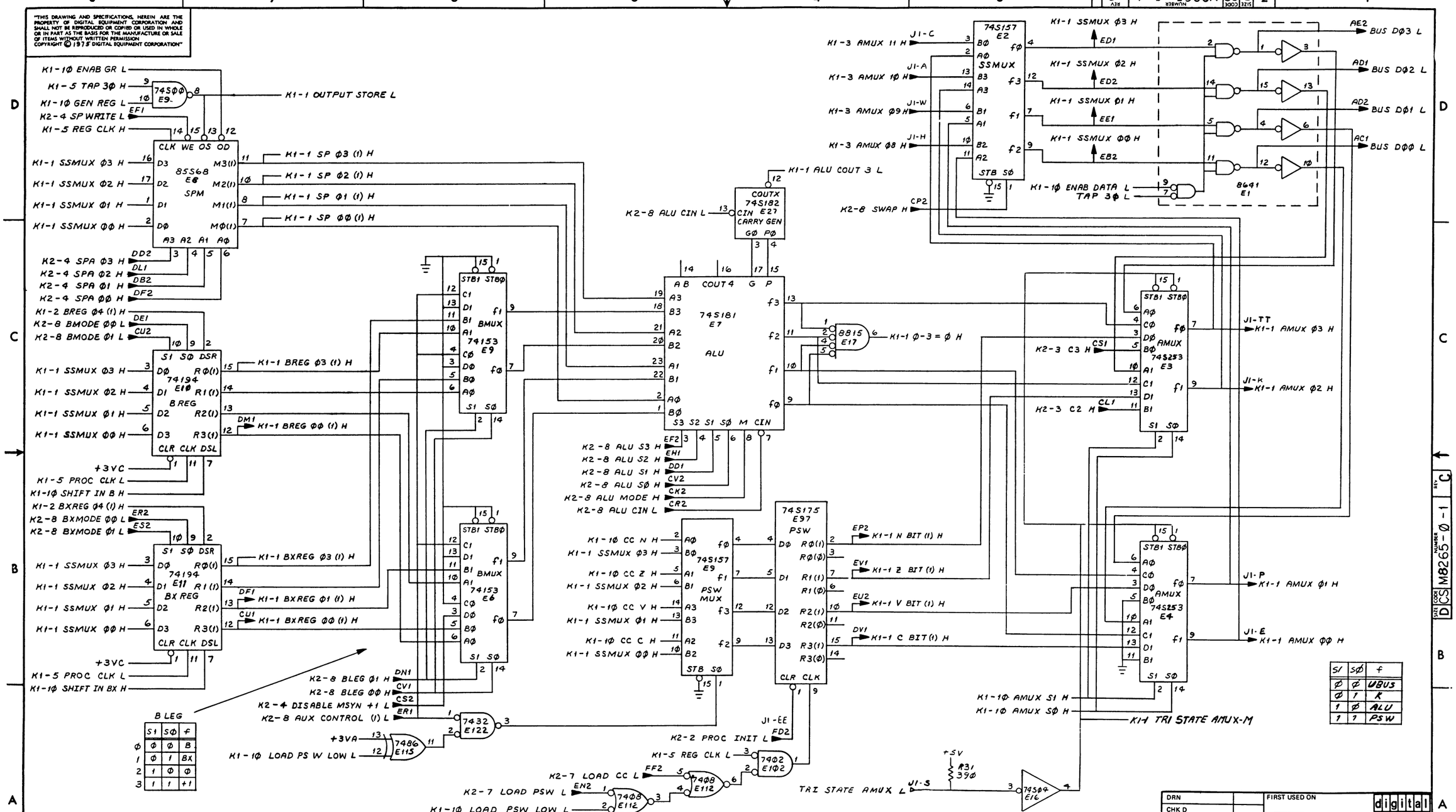

S1	S0	f
0	0	UBUS
0	1	R
1	0	ALU
1	1	PSW

	S1	S0	f
0	0	0	B
1	0	1	BX
2	1	0	0
3	1	1	+1

(DATA PATH 0-3)

REVISIONS							
CHK	CHANGE NO	REV					
EL	M8265-00001	A	M8265-00002	B	29	M8265-00003	C
	R BARRY		M. SULLIVAN			R BARRY	
	9 MAY 77		7-20-77			31 AUG 77	

DEC FORM NO DRD 138

DRN	
CHK D	
ENG	
PROJ ENG	
PROD	
NEXT HIGHER ASSY	
SCALE	-
SHEET	1 OF 10

FIRST USED ON digital

TITLE KDIIEA DATA PATH (K1-1)

SIZE	CODE	NUMBER	REV
D	CS	M8265-0-1	C

DIST

"THIS DRAWING AND SPECIFICATIONS, HEREIN ARE THE PROPERTY OF DIGITAL EQUIPMENT CORPORATION AND SHALL NOT BE REPRODUCED OR COPIED OR USED IN WHOLE OR IN PART AS THE BASIS FOR THE MANUFACTURE OR SALE OF ITEMS WITHOUT WRITTEN PERMISSION COPYRIGHT © 1975 DIGITAL EQUIPMENT CORPORATION"

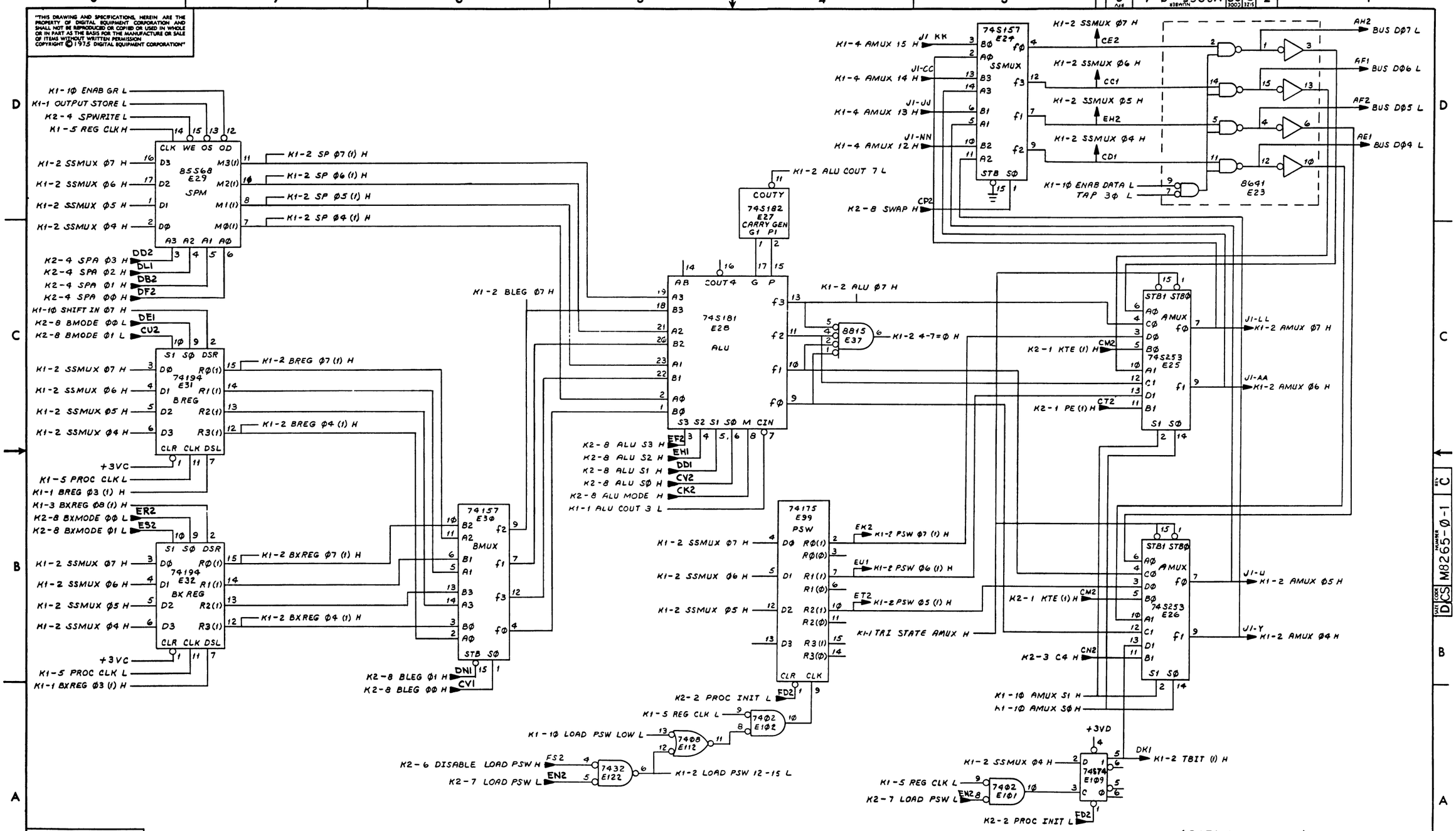

(DATA PATH 4-7)

REVISIONS		
CHK	CHANGE NO	REV

TITLE	SIZE	CODE	NUMBER	REV
KDIIEA DATA PATH (K1-2)	D	CS	M8265-Ø-1	C
SCALE —	SHEET 2 OF 10	DIST		

DEC FORM NO. DRD 138

"THIS DRAWING AND SPECIFICATIONS, HEREIN ARE THE PROPERTY OF DIGITAL EQUIPMENT CORPORATION AND SHALL NOT BE REPRODUCED OR COPIED OR USED IN WHOLE OR IN PART AS THE BASIS FOR THE MANUFACTURE OR SALE OF ITEMS WITHOUT WRITTEN PERMISSION
COPYRIGHT © 1975 DIGITAL EQUIPMENT CORPORATION"

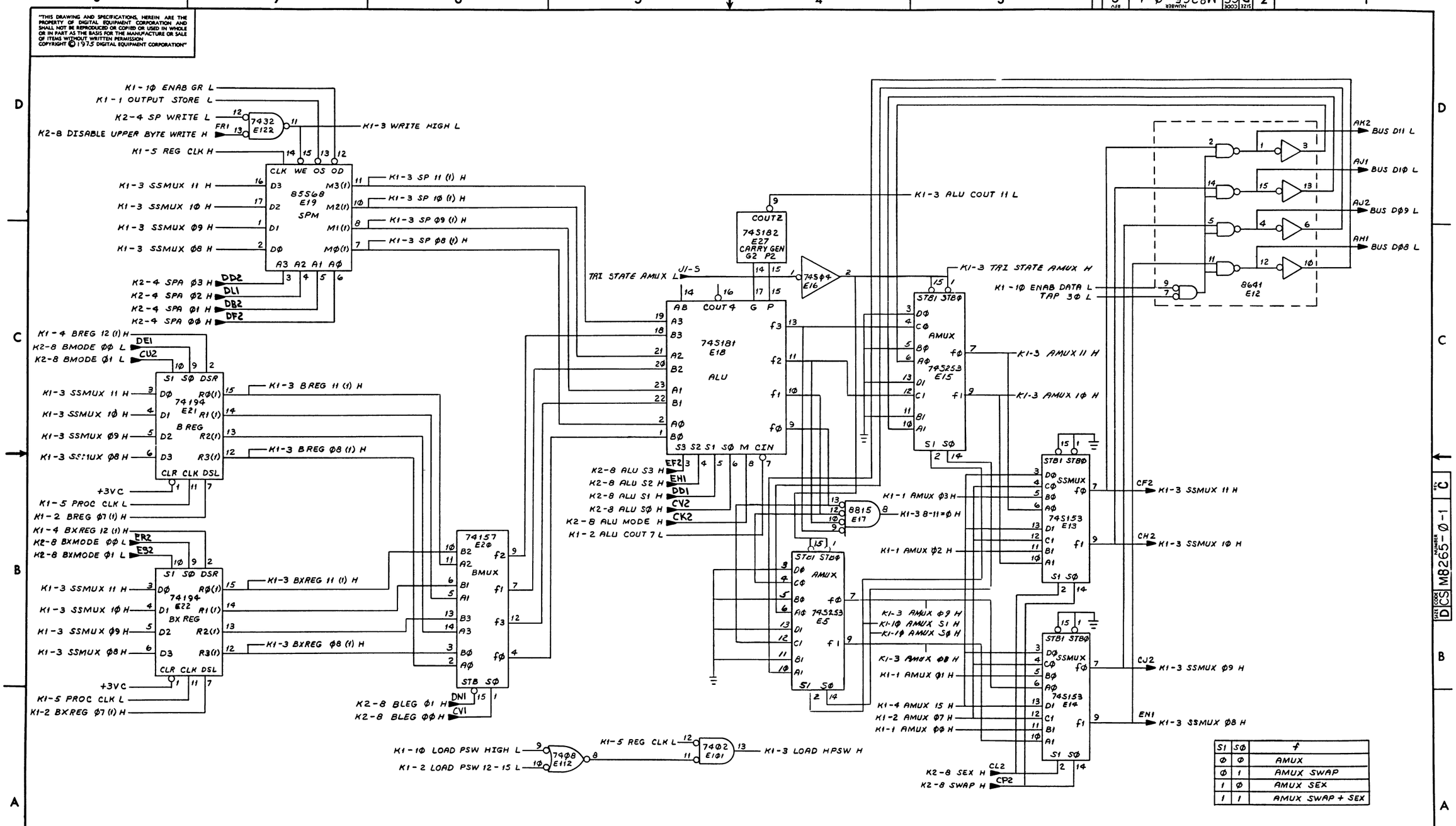

S1	S0	f
0	0	AMUX
0	1	AMUX SWAP
1	0	AMUX SEX
1	1	AMUX SWAP + SEX

REVISIONS		
CHK	CHANGE NO	REV

TITLE	SIZE	CODE	NUMBER	REV.
KDIIEA DATA PATH (K1-3)	D	CS	M8265-0-1	C
SCALE —	SHEET 3 OF 10	DIST		

DEC FORM NO. DRD 138

"THIS DRAWING AND SPECIFICATIONS, HEREIN, ARE THE PROPERTY OF DIGITAL EQUIPMENT CORPORATION AND SHALL NOT BE REPRODUCED OR COPIED OR USED IN WHOLE OR IN PART AS THE BASIS FOR THE MANUFACTURE OR SALE OF ITEMS WITHOUT WRITTEN PERMISSION. COPYRIGHT © 1975 DIGITAL EQUIPMENT CORPORATION"

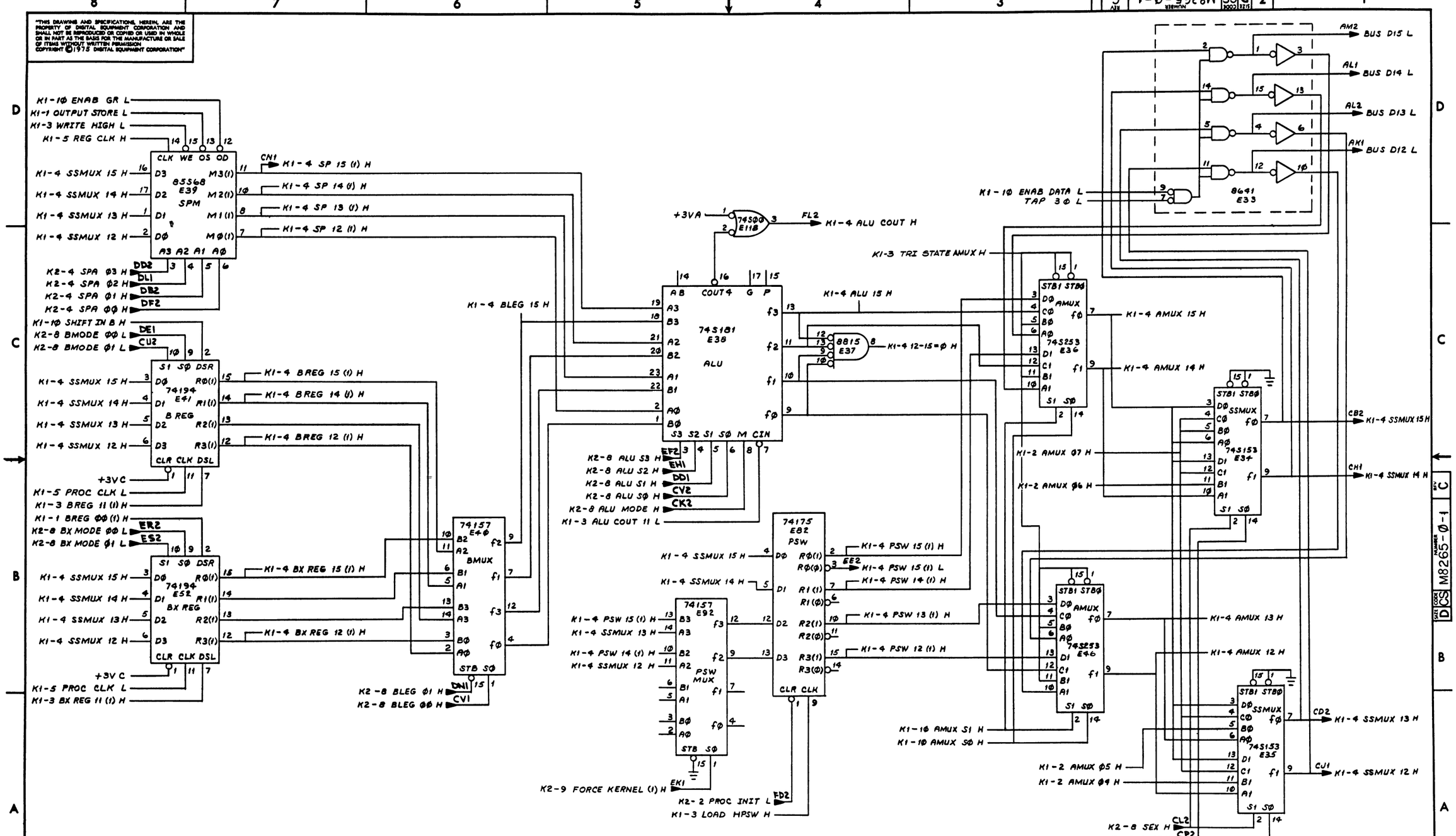

(DATA PATH 12-15)

REVISIONS		
CHK	CHANGE NO	REV

TITLE	SIZE	CODE	NUMBER	REV.
KDIIEA DATA PATH (K1-4)	D	CS	M8265-0-1	C
SCALE —	SHEET 4 OF 10		DIST.	

DEC FORM NO. DRD 120

"THIS DRAWING AND SPECIFICATIONS, HEREIN, ARE THE PROPERTY OF DIGITAL EQUIPMENT CORPORATION AND SHALL NOT BE REPRODUCED OR COPIED OR USED IN WHOLE OR IN PART AS THE BASIS FOR THE MANUFACTURE OR SALE OF ITEMS WITHOUT WRITTEN PERMISSION. COPYRIGHT © 1975 DIGITAL EQUIPMENT CORPORATION"

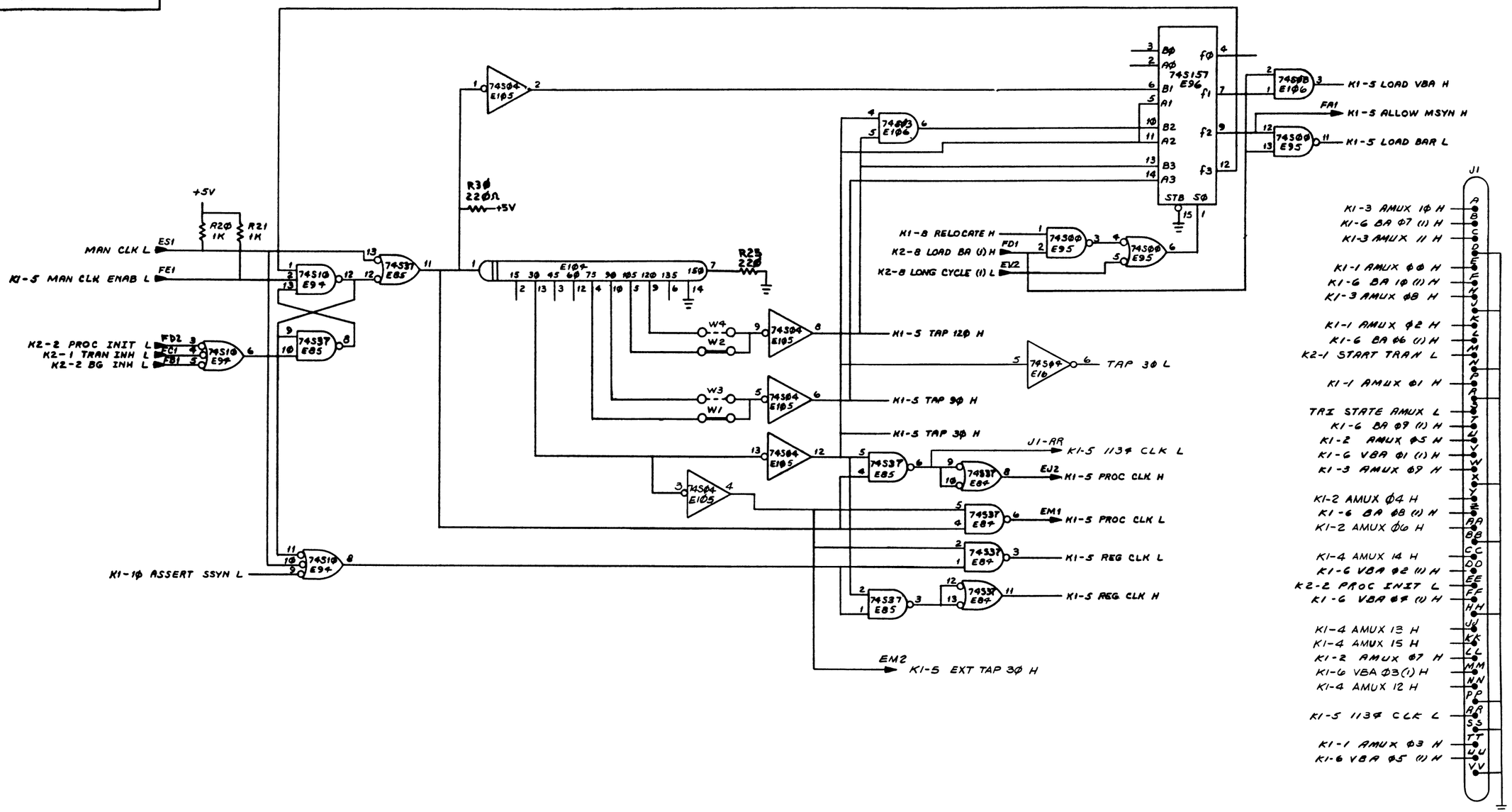

(CPU CLK)

REVISIONS		
CHK	CHANGE NO	REV

TITLE	SIZE	CODE	NUMBER	REV.
KDI11A DATA PATH (K1-5)	D	CS	M8265-0-1	C.
SCALE —	SHEET 5 OF 10	DIST.		

"THIS DRAWING AND SPECIFICATIONS, HEREIN ARE THE PROPERTY OF DIGITAL EQUIPMENT CORPORATION AND SHALL NOT BE REPRODUCED OR COPIED OR USED IN WHOLE OR IN PART AS THE BASIS FOR THE MANUFACTURE OR SALE OF ITEMS WITHOUT WRITTEN PERMISSION. COPYRIGHT © 1975 DIGITAL EQUIPMENT CORPORATION"

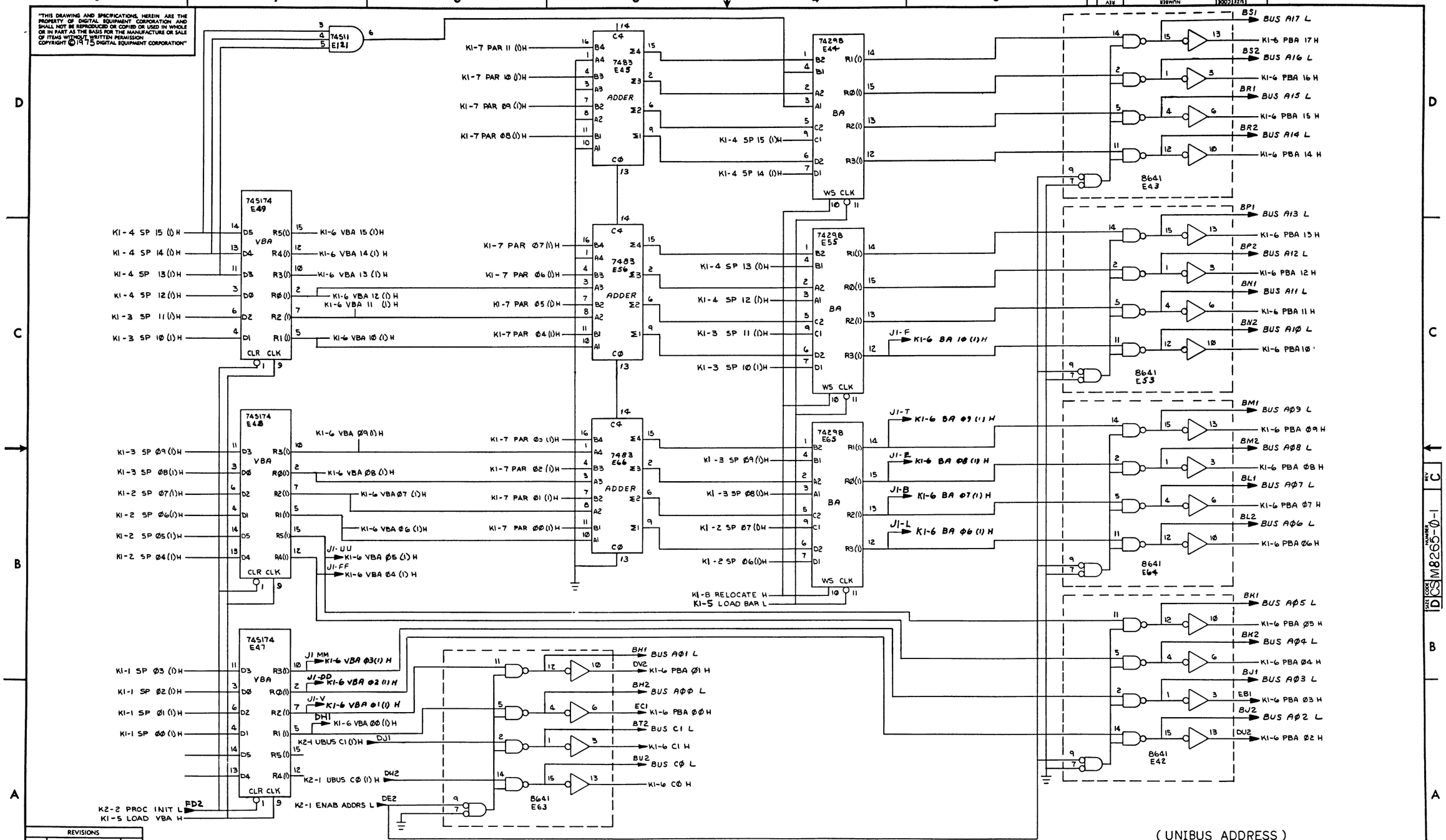

(UNIBUS ADDRESS)

REVISIONS		
CHK	CHANGE NO	REV

TITLE	SIZE	CODE	NUMBER	REV.
KD11EA DATA PATH (K1-6)	D	CS	M8265-0-1	C
SCALE —	SHEET 6 OF 10	DIST		

DEC FORM NO DRD 138

"THIS DRAWING AND SPECIFICATIONS, HEREIN ARE THE PROPERTY OF DIGITAL EQUIPMENT CORPORATION AND SHALL NOT BE REPRODUCED OR COPIED OR USED IN WHOLE OR IN PART AS THE BASIS FOR THE MANUFACTURE OR SALE OF ITEMS WITHOUT WRITTEN PERMISSION
COPYRIGHT © 1975 DIGITAL EQUIPMENT CORPORATION"

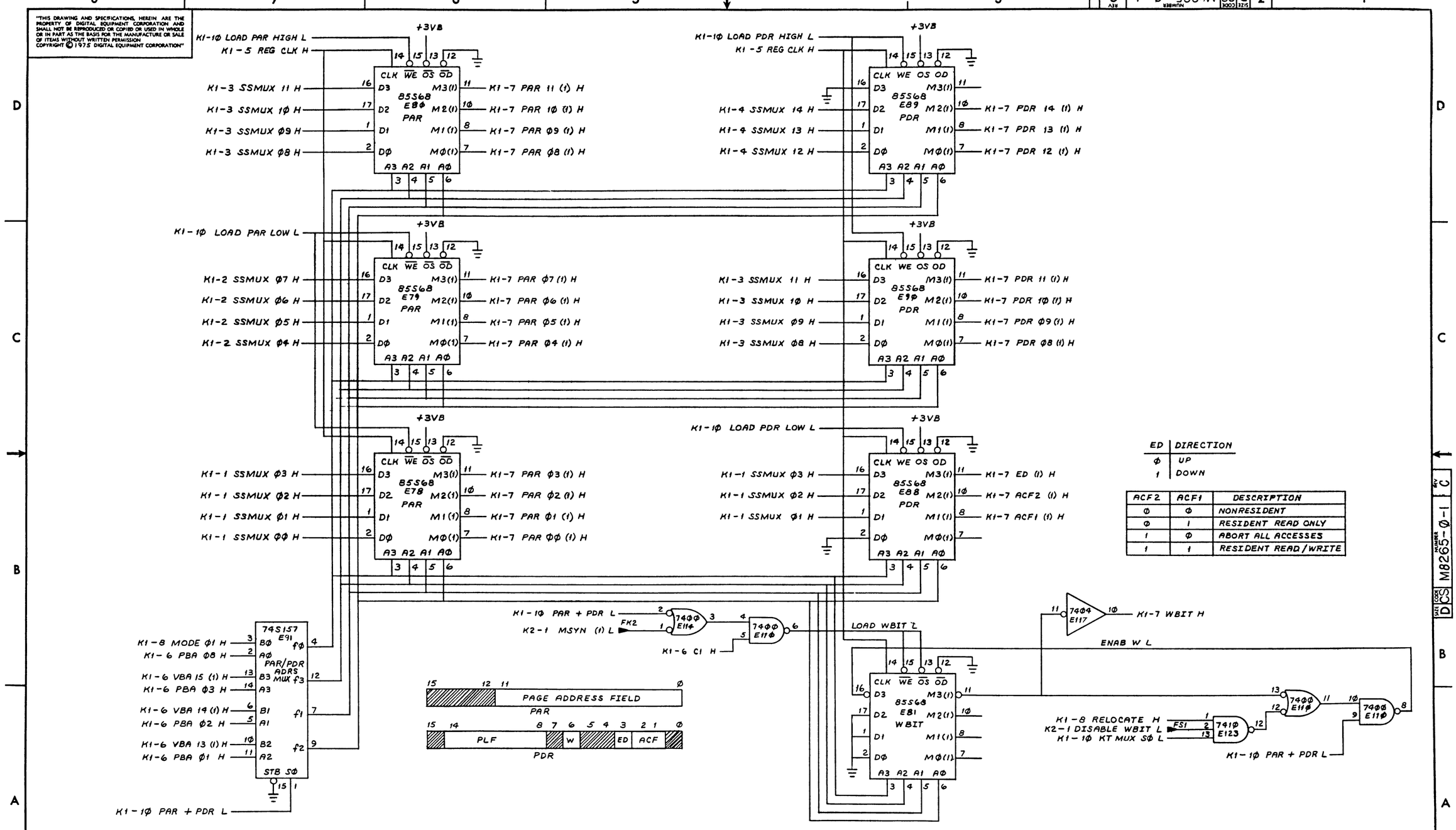

ED	DIRECTION
0	UP
1	DOWN

ACF2	ACF1	DESCRIPTION
0	0	NONRESIDENT
0	1	RESIDENT READ ONLY
1	0	ABORT ALL ACCESSES
1	1	RESIDENT READ/WRITE

(PAR + PDR)

REVISIONS		
CHK	CHANGE NO	REV

TITLE KDI IEA DATA PATH (K1-7)

SIZE D CODE CS NUMBER M8265-0-1 REV. C

SCALE — SHEET 7 OF 10 DIST

DEC FORM NO. DRD 138

"THIS DRAWING AND SPECIFICATIONS, HEREIN ARE THE PROPERTY OF DIGITAL EQUIPMENT CORPORATION AND SHALL NOT BE REPRODUCED OR COPIED OR USED IN WHOLE OR IN PART AS THE BASIS FOR THE MANUFACTURE OR SALE OF ITEMS WITHOUT WRITTEN PERMISSION
COPYRIGHT © 1975 DIGITAL EQUIPMENT CORPORATION"

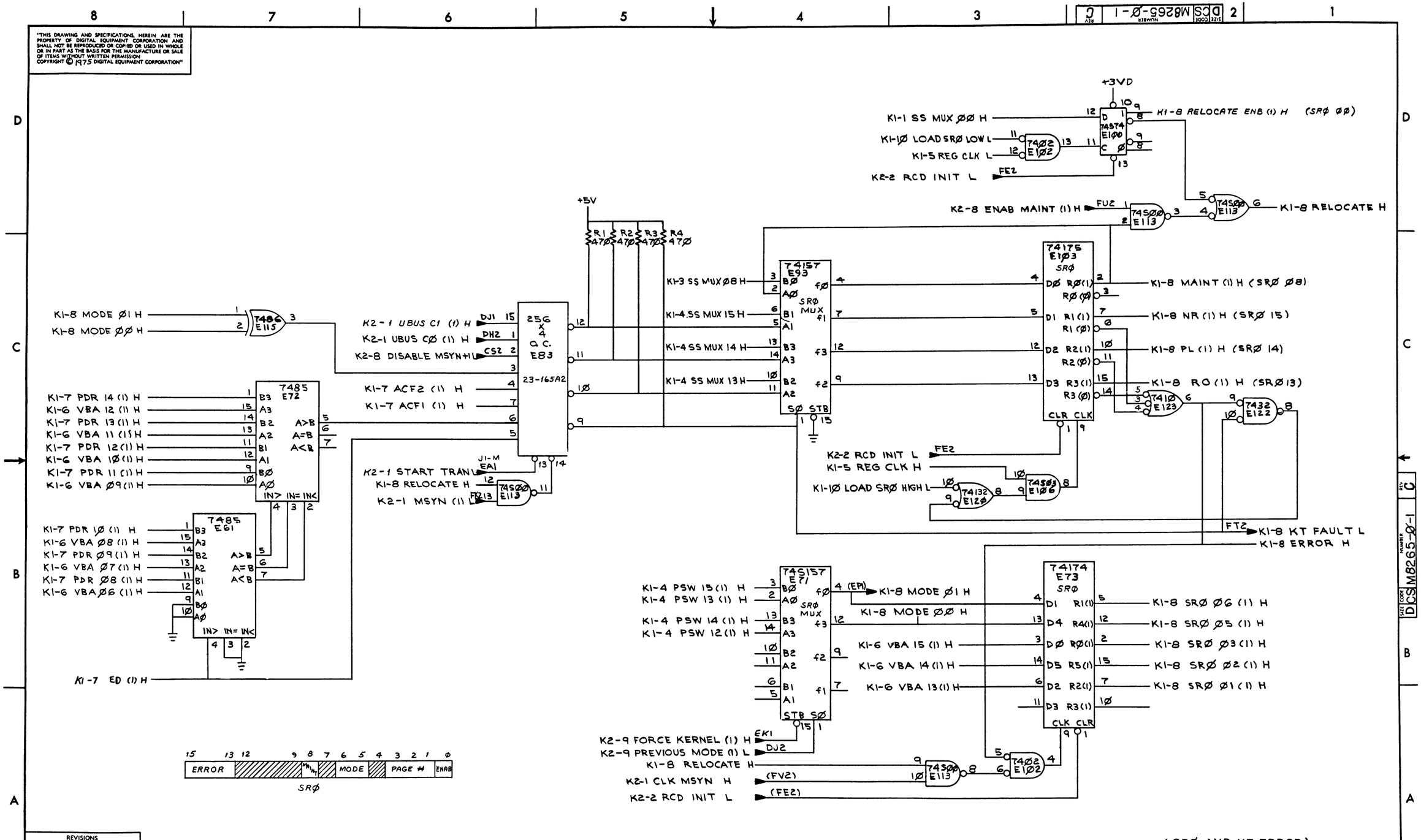

REVISIONS		
CHK	CHANGE NO	REV

(SRØ AND KT ERROR)

TITLE	SIZE	CODE	NUMBER	REV.
KDI EA DATA PATH (K1-8)	D	CS	M8265-Ø-1	C
SCALE —	SHEET 8 OF 10	DIST		

DEC FORM NO DRD 138

"THIS DRAWING AND SPECIFICATIONS, HEREIN ARE THE PROPERTY OF DIGITAL EQUIPMENT CORPORATION AND SHALL NOT BE REPRODUCED OR COPIED OR USED IN WHOLE OR IN PART AS THE BASIS FOR THE MANUFACTURE OR SALE OF ITEMS WITHOUT WRITTEN PERMISSION
COPYRIGHT © 1975 DIGITAL EQUIPMENT CORPORATION"

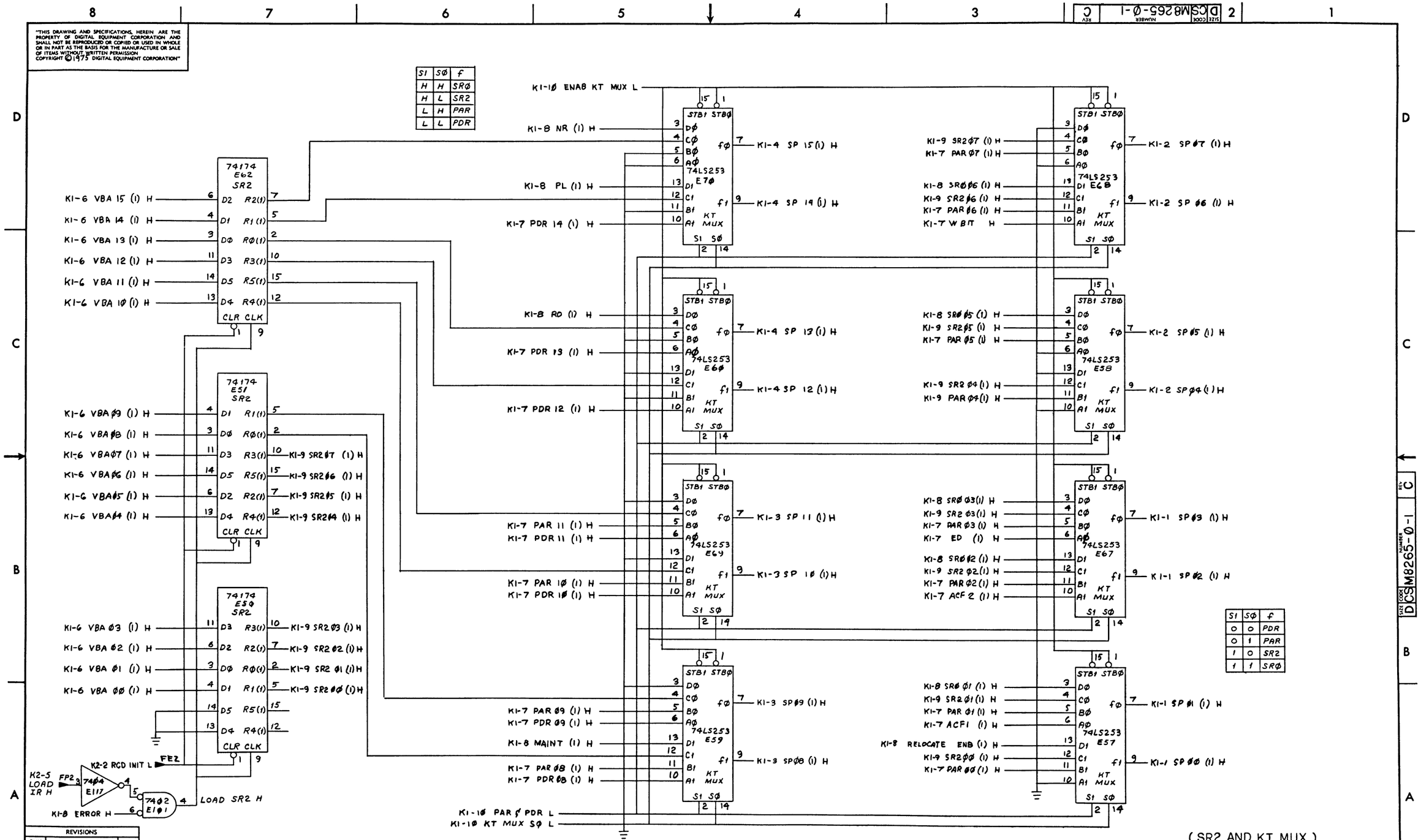

(SR2 AND KT MUX)

REVISIONS		
CHK	CHANGE NO	REV

TITLE	SIZE	CODE	NUMBER	REV.
KDIIEA DATA PATH(KI-9)	D	CS	M8265-Ø-1	C
SCALE — / —	SHEET 9 OF 10	DIST.		

DEC FORM NO DRD 138

"THIS DRAWING AND SPECIFICATIONS, HEREIN, ARE THE PROPERTY OF DIGITAL EQUIPMENT CORPORATION AND SHALL NOT BE REPRODUCED OR COPIED OR USED IN WHOLE OR IN PART AS THE BASIS FOR THE MANUFACTURE OR SALE OF ITEMS WITHOUT WRITTEN PERMISSION. COPYRIGHT © 1975 DIGITAL EQUIPMENT CORPORATION"

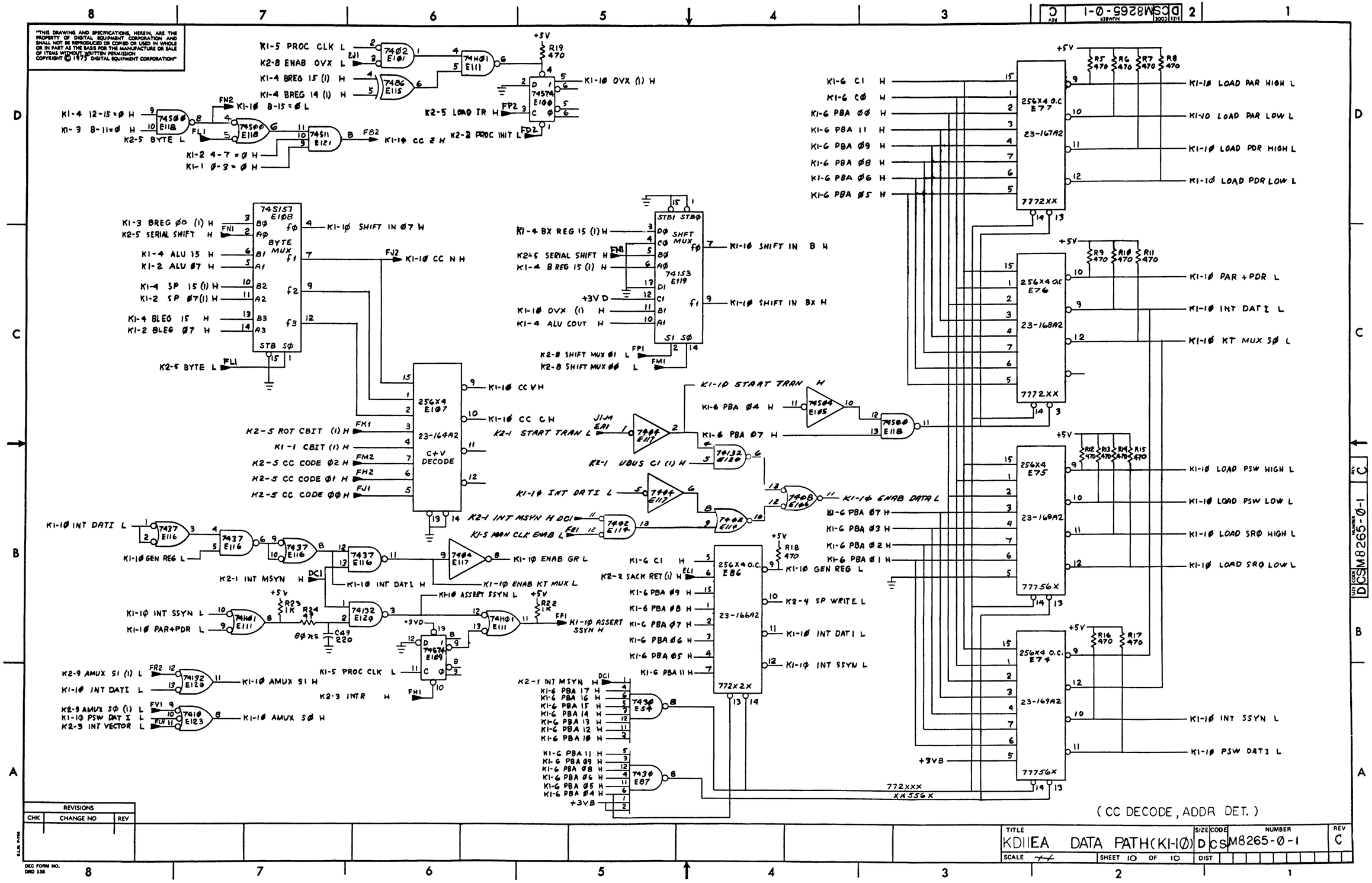

REVISIONS		
CHK	CHANGE NO	REV

TITLE	SIZE	CODE	NUMBER	REV
KD11EA DATA PATH (K1-10)	D	CS	M8265-0-1	C
SCALE —	SHEET 10 OF 10	DIST		

DEC FORM NO. DRD 138

"THIS DRAWING AND SPECIFICATIONS HEREIN, ARE THE PROPERTY OF DIGITAL EQUIPMENT CORPORATION AND SHALL NOT BE REPRODUCED OR COPIED OR USED IN WHOLE OR IN PART AS THE BASIS FOR THE MANUFACTURE OR SALE OF ITEMS WITHOUT WRITTEN PERMISSION
COPYRIGHT © 1975 DIGITAL EQUIPMENT CORPORATION"

NOTES:

1. IN PDP11/04,11/09 AND PDP 11/34,11/39 SYSTEMS WITHOUT BATTERY BACKUP, TP1 SHOULD NOT BE CONNECTED TO THE POWER SUPPLY BATTERY STATUS SIGNAL UNLESS BOOTS ON ALL POWER RESTARTS ARE DESIRED.
2. IN ALL PDP11 SYSTEM WHOSE PROCESSOR MODULE DOES NOT CONTAIN GRANT PULL-UP RESISTORS, EITHER THE M93Ø1 MUST BE POSITIONED IN THE TERMINATOR SLOT AT THE END OF THE UNIBUS FURTHEST FROM THE PROCESSOR OR JUMPERS W1 THRU W5 MUST BE INSTALLED, SO THE M93Ø1 CAN BE INSERTED IN THE TERMINATOR SLOT NEXT TO THE PROCESSOR.
3. ON PDP11 SYSTEMS CONTAINING A BUS REPEATER OPTION, THE M93Ø1 MUST BE INSTALLED ON THE PROCESSOR SIDE OF THE REPEATER SEE NOTE 2 FOR OTHER RESTRICTIONS.
4. JUMPER W6 SHOULD ONLY BE INSTALLED IN 11/55 AND 11/70 COMPUTERS WHOSE BACKPLANES HAVE BEEN MODIFIED FOR THIS MODULE. CONNECTOR PIN BD1 IN THESE MODIFIED BACKPLANES WILL NOT BE TIED TO GROUND.
5. EARLIER VERSIONS USED PLASTIC SWITCH COVER (PN 121184-06) TO PREVENT INADVERTENT PROGRAMING OF S1.
6. 11/40'S WITH RK06 REQUIRE CS REVISION P OR LATER.
7. 1001610-00 AND 1001610-01 ARE INTERCHANGEABLE
8. ON VARIATIONS YA, YB AND YF THIS HANDLE IS REMOVED

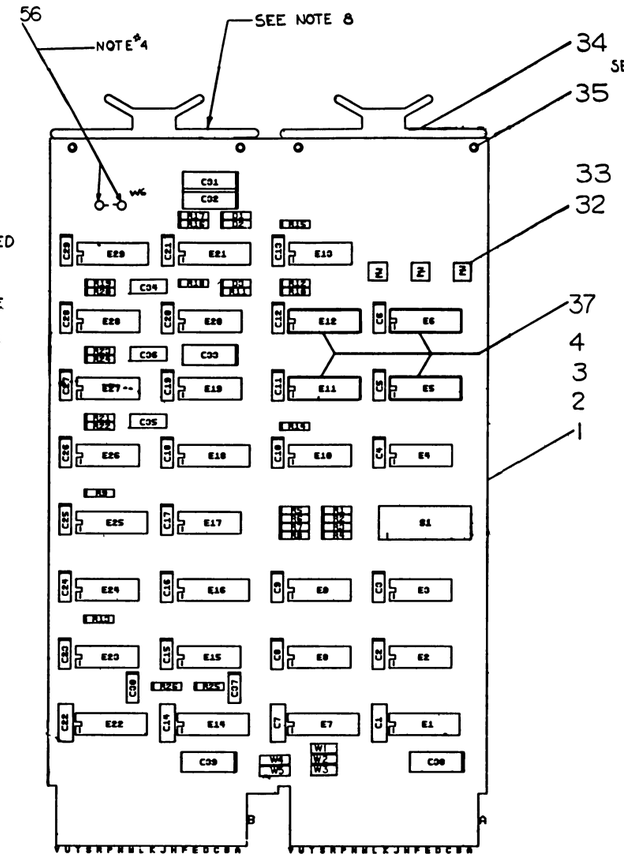

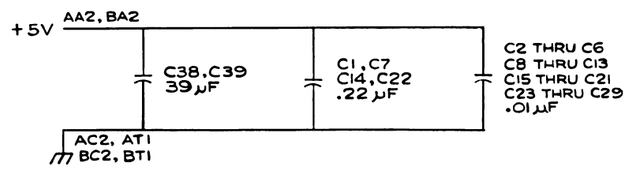

REF	REF	REF	REF	REF	REF	REF	REF	REF	REF		X-Y COORDINATE HOLE LOCATION	K-CO-M93Ø1-Ø-4	1
REF	REF	REF	REF	REF	REF	REF	REF	REF	REF		ASSY/DRILLING HOLE LAYOUT	D-AH-M93Ø1-Ø-5	2
REF	REF	REF	REF	REF	REF	REF	REF	REF	REF		MODULE ECO HISTORY	B-MH-M93Ø1-Ø-6	3
1	1	1	1	1	1	1	1	1	1		ETCHED CIRCUIT BOARD	5Ø112Ø8	4
4	4	4	4	4	4	4	4	4	4	C1, C7, C14, C22	CAP .22 µF 5ØV	1Ø1Ø274-Ø1	5
25	25	25	25	25	25	25	25	25	25	C2 THRU C6, C8 THRU C13 C15 THRU C21, C23 THRU C29	CAP .Ø1 µF 1ØØV 2Ø%	1ØØ161Ø-Ø1	6
2	2	2	2	2	2	2	2	2	2	C3Ø, C37	CAP .ØØ1 µF 25ØV 2Ø%	1ØØØØ43	7
4	4	4	4	4	4	4	4	4	4	C32, C33, C38, C39	CAP 39 µF 1ØV 1Ø%	1ØØØØ76	8
3	3	3	3	3	3	3	3	3	3	C34, C35, C36	CAP 27Ø pF 1ØØV 5%	1ØØØØ22	9
3	3	3	3	3	3	3	3	3	3	D1, D2, D3	DIODE DG64 IN3606	11ØØ114	1Ø
8	8	8	8	8	8	8	8	8	8	R1 THRU R8	RES 1ØK 1/4W 5%	13ØØ479	11
2	2	2	2	2	2	2	2	2	2	R9, R12	RES 1K 1/4W 5%	13ØØ365	12
4	4	4	4	4	4	4	4	4	4	R11, R13, R14, R18	RES 4.7K 1/4W 5%	13ØØ447	13
2	2	2	2	2	2	2	2	2	2	R16, R17	RES 3ØK 1/4W 5%	13Ø2394	14
3	3	3	3	3	3	3	3	3	3	R19, R21, R23	RES 47Ω 1/4W 5%	13ØØ2Ø2	15
3	3	3	3	3	3	3	3	3	3	R2Ø, R22, R24	RES 2K 1/4W 5%	13Ø2388	16
2	2	2	2	2	2	2	2	2	2	R25, R26	RES 383Ω 1/4W 1%	1305125	17
2	2	2	2	2	2	2	2	2	2	E1, E22	28 RES DIVIDER NETWORK	13-12628-ØØ	18
2	2	2	2	2	2	2	2	2	2	E7, E14	25 RES DIVIDER NETWORK	13-12628-Ø1	19
8	8	8	8	8	8	8	8	8	8	E2, E3, E8, E9 E15, E23, E27, E28	I.C. DEC 8881	19Ø97Ø5	2Ø
2	2	2	2	2	2	2	2	2	2	E4, E1Ø	I.C. DEC 74Ø2	19Ø9ØØ4	21
1	1	1	1	1	1	1	1	1	1	E13	I.C. DEC 7474	19Ø5547	22
3	3	3	3	3	3	3	3	3	3	E16, E18, E25	I.C. DEC 8837	1911116	23
1	1	1	1	1	1	1	1	1	1	E17	I.C. DEC 742Ø	19Ø5577	24
2	2	2	2	2	2	2	2	2	2	E19, E24	I.C. DEC 314A	19Ø97Ø4	25
1	1	1	1	1	1	1	1	1	1	E2Ø	I.C. DEC 864Ø	1911469	26
1	1	1	1	1	1	1	1	1	1	E21	I.C. DEC 96Ø2	191Ø951	27
1	1	1	1	1	1	1	1	1	1	E26	I.C. DEC 7437	191ØØ91	28
1	1	1	1	1	1	1	1	1	1	E29	I.C. DEC 7476	19Ø5585	29
1	1	1	1	1	1	1	1	1	1	S1	SWITCH, DIP, 1Ø POLE	1211164-Ø6	3Ø
											~~SWITCH COVER~~	~~1211184-ØØ~~	~~31~~
3	3	3	3	3	3	3	3	3	3		EYELET (FASTON)	9ØØ9ØØØ	32
3	3	3	3	3	3	3	3	3	3	TP1, TP2, TP3	TAB (FASTON)	9ØØ7112	33
2	2	2	2	1	2	2	1	1	2		HANDLE FLIP/CHIP MAGENTA	9ØØ8337-Ø6	34
4	4	4	4	2	4	4	2	2	4		EYELET	9ØØ6732	35
1	1	1	1	1	1	1	1	1	1	C31	CAP 1 µF 35V 10%	1ØØ1776	36
M93Ø1-YX	M93Ø1-YJ	M93Ø1-YE	M93Ø1-YH	M93Ø1-YF	M93Ø1-YD	M93Ø1-YC	M93Ø1-YB	M93Ø1-YA	M93Ø1				

QTY | REF. DESIGNATION | DESCRIPTION | PART NO. | ITEM NO

PARTS LIST

I.C. DEC 314	1	8
I.C. DEC 7476	13	5
I.C. DEC 864Ø	1	8
I.C. DEC 8837	8	16
I.C. DEC 96Ø2	8	16
IC TYPE	GND	+5V

GND AND 5V ARE USUALLY PIN 7 AND 14 RESPECTIVELY EXCEPTIONS ARE STATED ABOVE

IC PIN LOCATIONS

FIRST USED ON OPTION MODEL: 11/Ø4

ETCH BOARD REV: F

REV	CHANGE NO.	REVISIONS
F	REDESIGN-00002	

DEC NO.	EIA NO.	DEC NO.	EIA NO.

SEMICONDUCTOR CONVERSION CHART

DRN. J. VINCENT	DATE 4/9/75	digital	
CHK'D. R. COOK	DATE 5/28/75		
ENG. T. DUBANIEUR	DATE 6/23/75	TITLE	UNIBUS TERMINATOR/ BOOTSTRAP
PROJ. ENG. J. BLOEM	DATE 6/19/75		
PROD. R PETERSON	DATE 6/30/75		
NEXT HIGHER ASSY		SIZE D	CODE CS	NUMBER M93Ø1-Ø-1	REV W
SCALE —/—			
SHEET 1 OF 5		DIST.	

TW

"THIS DRAWING AND SPECIFICATIONS, HEREIN, ARE THE PROPERTY OF DIGITAL EQUIPMENT CORPORATION AND SHALL NOT BE REPRODUCED OR COPIED OR USED IN WHOLE OR IN PART AS THE BASIS FOR THE MANUFACTURE OR SALE OF ITEMS WITHOUT WRITTEN PERMISSION. COPYRIGHT © 1970 DIGITAL EQUIPMENT CORPORATION"

REWORK INSTRUCTIONS

FIELD SERVICE DEPOT: REMOVE THE INNER HANDLE LOCATED ABOVE C31 BY DRILLING OUT THE TWO EYELETS WITH A .125 INCH DRILL.

QTY	QTY	QTY	QTY	QTY	QTY	QTY	QTY	QTY	QTY	REF DESIGNATION	DESCRIPTION	PART NO	ITEM NO
4	4	4	4	4	4	4	4	4	4	E5, E6, E11, E12	SOCKET, 16 PIN, I.C.	1211813	37
Ø	Ø	Ø	Ø	Ø	Ø	Ø	Ø	1	Ø	E5	I.C. DEC. TRI-STATE 2Ø48 ROM	23Ø34A9	38
Ø	Ø	Ø	Ø	Ø	Ø	Ø	Ø	1	Ø	E6	I.C. DEC TRI-STATE 2Ø48 ROM	23Ø35A9	39
Ø	Ø	Ø	Ø	Ø	Ø	Ø	Ø	1	Ø	E11	I.C. DEC TRI-STATE 2Ø48 ROM	23Ø36A9	4Ø
Ø	Ø	Ø	Ø	Ø	Ø	Ø	Ø	1	Ø	E12	I.C. DEC TRI-STATE 2Ø48 ROM	23Ø37A9	41
Ø	Ø	Ø	Ø	Ø	Ø	Ø	1	Ø	Ø	E5	I.C. DEC TRI-STATE 2Ø48 ROM	23Ø38A9	42
Ø	Ø	Ø	Ø	Ø	Ø	Ø	1	Ø	Ø	E6	I.C. DEC TRI-STATE 2Ø48 ROM	23Ø39A9	43
Ø	Ø	Ø	Ø	Ø	Ø	Ø	1	Ø	Ø	E11	I.C. DEC TRI-STATE 2Ø48 ROM	23Ø4ØA9	44
Ø	Ø	Ø	Ø	Ø	Ø	Ø	1	Ø	Ø	E12	I.C. DEC TRI-STATE 2Ø48 ROM	23Ø41A9	45
Ø	Ø	Ø	Ø	Ø	Ø	1	Ø	Ø	Ø	E5	I.C. DEC TRI-STATE 2Ø48 ROM	23Ø42A9	46
Ø	Ø	Ø	Ø	Ø	Ø	1	Ø	Ø	Ø	E6	I.C. DEC TRI-STATE 2Ø48 ROM	23Ø43A9	47
Ø	Ø	Ø	Ø	Ø	Ø	1	Ø	Ø	Ø	E11	I.C. DEC TRI-STATE 2Ø48 ROM	23Ø44A9	48
Ø	Ø	Ø	Ø	Ø	Ø	1	Ø	Ø	Ø	E12	I.C. DEC TRI-STATE 2Ø48 ROM	23Ø45A9	49
Ø	Ø	Ø	Ø	Ø	1	Ø	Ø	Ø	Ø	E5	I.C. DEC TRI-STATE 2Ø48 ROM	23Ø46A9	5Ø
Ø	Ø	Ø	Ø	Ø	1	Ø	Ø	Ø	Ø	E6	I.C. DEC TRI-STATE 2Ø48 ROM	23Ø47A9	51
Ø	Ø	Ø	Ø	Ø	1	Ø	Ø	Ø	Ø	E11	I.C. DEC TRI-STATE 2Ø48 ROM	23123A9	52
Ø	Ø	Ø	Ø	Ø	1	Ø	Ø	Ø	Ø	E12	I.C. DEC TRI-STATE 2Ø48 ROM	23Ø49A9	53
Ø	Ø	Ø	5	Ø	Ø	5	Ø	Ø	Ø	W1 THRU W5	JUMPER, WIRE, WHITE INSULATION	9ØØ9185	54
2	2	2	2	2	2	2	2	2	2	R10, R15	RES 220Ω, 1/4W, 5%	1300271	55
2	2	2	2	2	2	2	2	2	2		SPLIT LUG	9006735	56
Ø	Ø	Ø	Ø	1	Ø	Ø	Ø	Ø	Ø	E5	I.C. DEC TRI-STATE 2Ø48 ROM	2348ØA9	57
Ø	Ø	Ø	Ø	1	Ø	Ø	Ø	Ø	Ø	E6	I.C. DEC TRI-STATE 2Ø48 ROM	2348 1A9	58
Ø	Ø	Ø	Ø	1	Ø	Ø	Ø	Ø	Ø	E11	I.C. DEC TRI-STATE 2Ø48 ROM	23482A9	59
Ø	Ø	Ø	Ø	1	Ø	Ø	Ø	Ø	Ø	E12	I.C. DEC TRI-STATE 2Ø48 ROM	23483A9	6Ø
Ø	Ø	Ø	1	Ø	Ø	Ø	Ø	Ø	Ø	E5	I.C. DEC TRI-STATE 2Ø48 ROM	23332A9	61
Ø	Ø	Ø	1	Ø	Ø	Ø	Ø	Ø	Ø	E6	I.C. DEC TRI-STATE 2Ø48 ROM	23333A9	62
Ø	Ø	Ø	1	Ø	Ø	Ø	Ø	Ø	Ø	E11	I.C. DEC TRI-STATE 2Ø48 ROM	23334A9	63
Ø	Ø	Ø	1	Ø	Ø	Ø	Ø	Ø	Ø	E12	I.C. DEC TRI-STATE 2Ø48 ROM	23335A9	64
Ø	Ø	1	Ø	Ø	Ø	Ø	Ø	Ø	Ø	E5	I.C. DEC TRI-STATE 2Ø48 ROM	23538A9	65
Ø	Ø	1	Ø	Ø	Ø	Ø	Ø	Ø	Ø	E6	I.C. DEC TRI-STATE 2Ø48 ROM	23539A9	66
Ø	Ø	1	Ø	Ø	Ø	Ø	Ø	Ø	Ø	E11	I.C. DEC TRI-STATE 2Ø48 ROM	2354ØA9	67
Ø	Ø	1	Ø	Ø	Ø	Ø	Ø	Ø	Ø	E12	I.C. DEC TRI-STATE 2Ø48 ROM	23541A9	68
Ø	1	Ø	Ø	Ø	Ø	Ø	Ø	Ø	Ø	E5	I.C. DEC TRI-STATE 2Ø48 ROM	2352ØA9	69
Ø	1	Ø	Ø	Ø	Ø	Ø	Ø	Ø	Ø	E6	I.C. DEC TRI-STATE 2Ø48 ROM	23521A9	70
Ø	1	Ø	Ø	Ø	Ø	Ø	Ø	Ø	Ø	E11	I.C. DEC TRI-STATE 2Ø48 ROM	23522A9	71
Ø	1	Ø	Ø	Ø	Ø	Ø	Ø	Ø	Ø	E12	I.C. DEC TRI-STATE 2Ø48 ROM	23523A9	72
A/R	A/R	A/R	A/R	A/R	A/R	A/R	A/R	A/R	A/R		WIRE 30 GA.	9105740-55	73
1	Ø	Ø	Ø	Ø	Ø	Ø	Ø	Ø	Ø	E5	I.C. DEC TRI-STATE 2Ø48 ROM	23744A9	74
1	Ø	Ø	Ø	Ø	Ø	Ø	Ø	Ø	Ø	E6	I.C. DEC TRI-STATE 2Ø48 ROM	23745A9	75
1	Ø	Ø	Ø	Ø	Ø	Ø	Ø	Ø	Ø	E11	I.C. DEC TRI-STATE 2Ø48 ROM	23746A9	76
1	Ø	Ø	Ø	Ø	Ø	Ø	Ø	Ø	Ø	E12	I.C. DEC TRI-STATE 2Ø48 ROM	23747A9	77
A/R	A/R	A/R	A/R	A/R	A/R	A/R	A/R	A/R	A/R		CEMENT PERMABOND	9009157	78

M9301-YX M9301-YJ M9301-YE M9301-YH M9301-YF M9301-YD M9301-YC M9301-YB M9301-YA M9301

REVISIONS

CHK	CHANGE NO	REV

TITLE UNIBUS TERMINATOR/BOOTSTRAP

SIZE D CODE CS NUMBER M9301-Ø-1 REV W

SCALE —/— SHEET 2 OF 5 DIST

TW

"THIS DRAWING AND SPECIFICATIONS, HEREIN, ARE THE PROPERTY OF DIGITAL EQUIPMENT CORPORATION AND SHALL NOT BE REPRODUCED OR COPIED OR USED IN WHOLE OR IN PART AS THE BASIS FOR THE MANUFACTURE OR SALE OF ITEMS WITHOUT WRITTEN PERMISSION.
COPYRIGHT © 1975 DIGITAL EQUIPMENT CORPORATION"

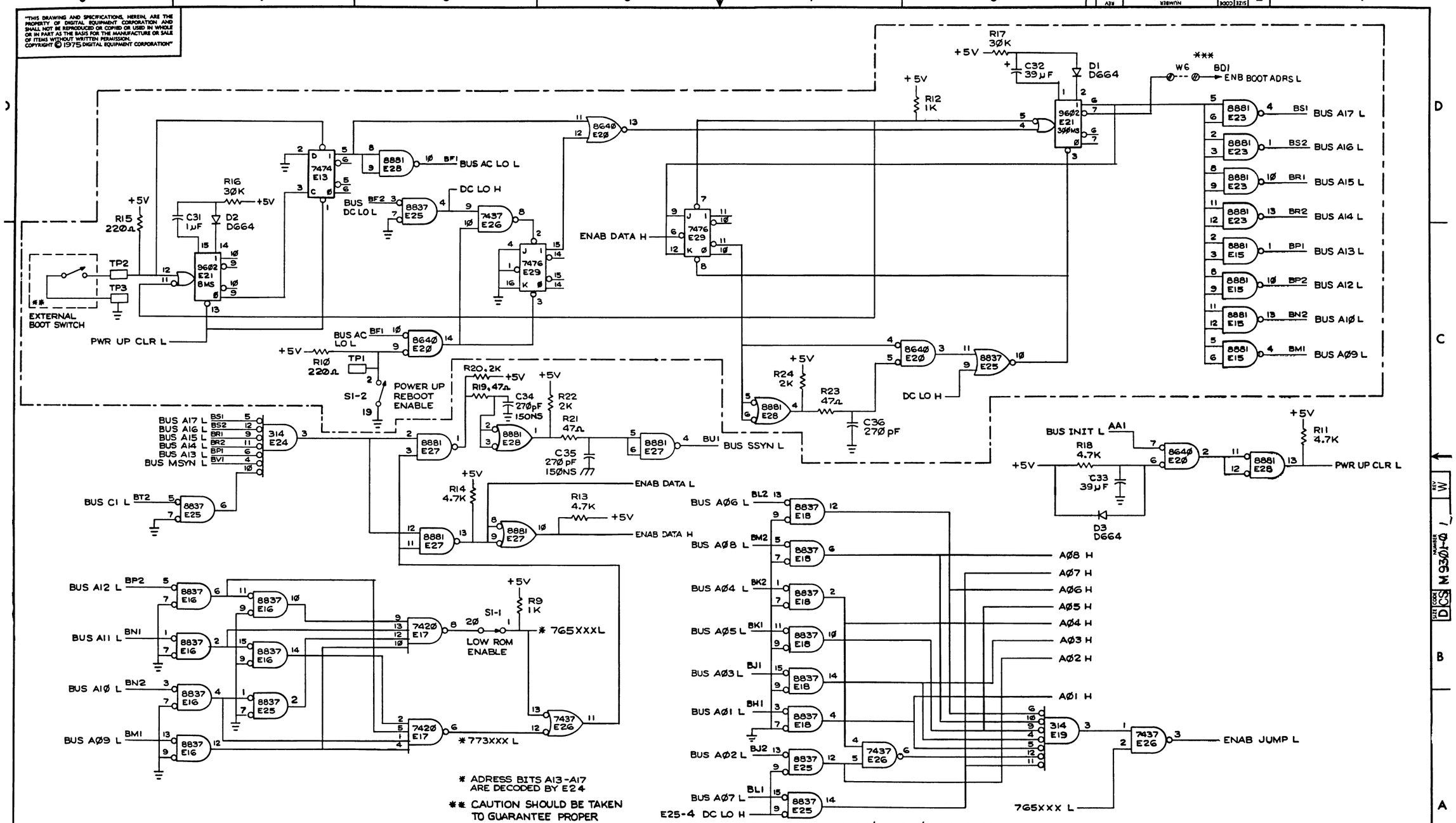

* ADRESS BITS A13-A17 ARE DECODED BY E24

** CAUTION SHOULD BE TAKEN TO GUARANTEE PROPER NOISE FILTERING & LOGIC LEVELS ON THESE INPUTS

*** JUMPER W6 SHOULD ONLY BE INSTALLED IN 11/55 AND 11/70 COMPUTERS WHOSE BACKPLANES HAVE BEEN MODIFIED FOR THIS MODULE.

REVISIONS		
CHK	CHANGE NO	REV

TITLE UNIBUS TERMINATOR/ BOOTSTRAP

SIZE D CODE CS NUMBER M9301-0-1 REV. W

SCALE — SHEET 3 OF 5 DIST.

TW

"THIS DRAWING AND SPECIFICATIONS, HEREIN, ARE THE PROPERTY OF DIGITAL EQUIPMENT CORPORATION AND SHALL NOT BE REPRODUCED OR COPIED OR USED IN WHOLE OR IN PART AS THE BASIS FOR THE MANUFACTURE OR SALE OF ITEMS WITHOUT WRITTEN PERMISSION. COPYRIGHT © 1975 DIGITAL EQUIPMENT CORPORATION"

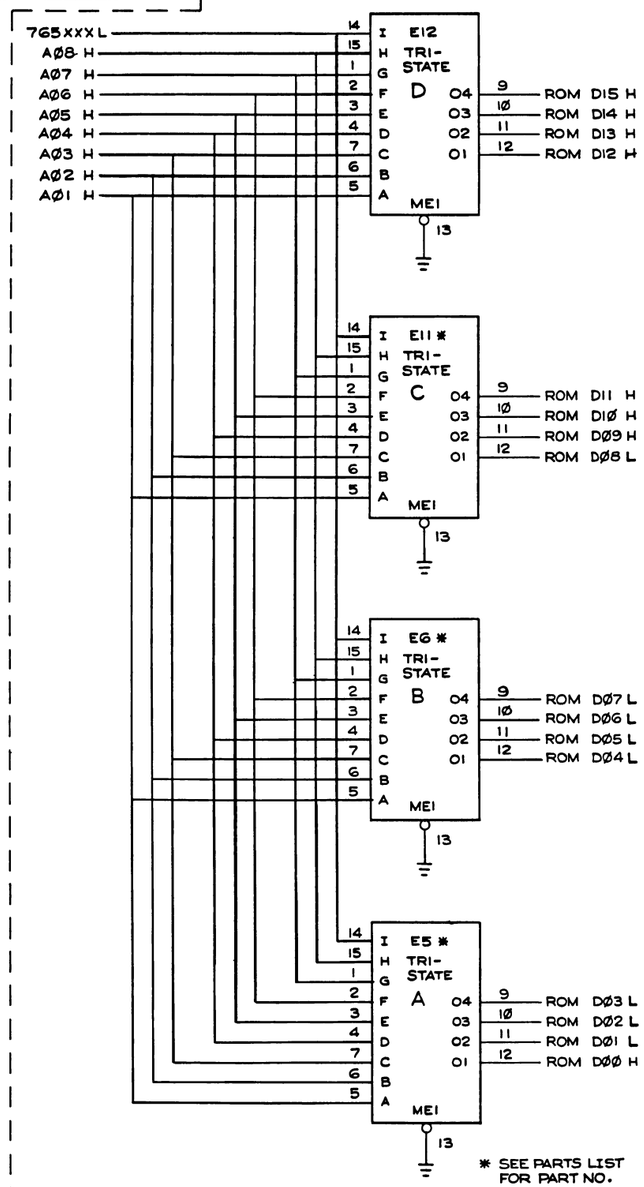

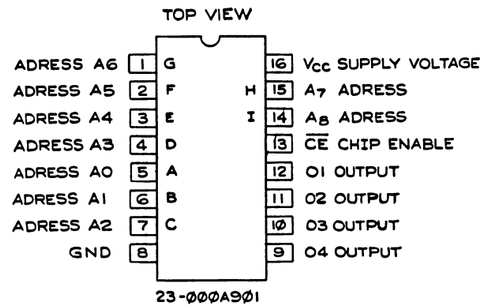

3. BLANK PROMS HAVE DEC PART NO. 23-ØØØAØØ1
4. BIPOLAR 2Ø48 (512 X 4) BIT PROMS PIN COMPATIBLE MAY BE USED WITH TRI-STATE OUTPUTS AND ACCESS TIME < 7Ø ns @ 7Ø°C (INTERSIL 5624, MMI 63Ø6, SIGNETICS 82S131, ETC)

ADRESS RANGE	
765ØØØ-765776	LOW ROM
773ØØØ-773776	HIGH ROM

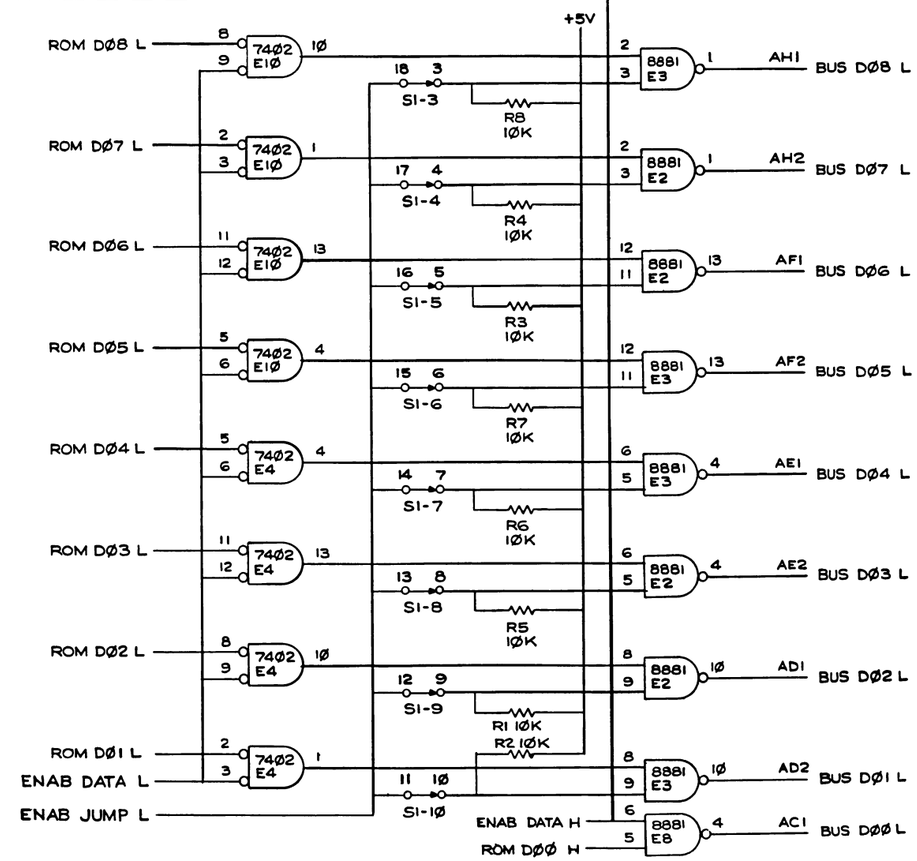

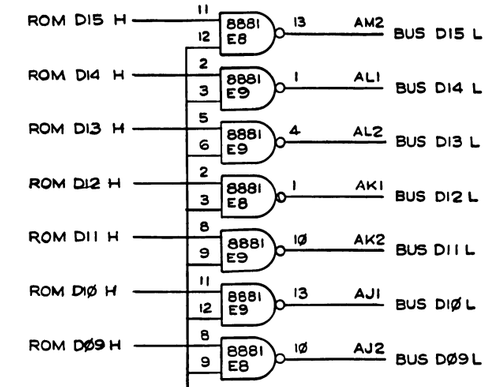

REVISIONS		
CHK	CHANGE NO	REV

TITLE	SIZE	CODE	NUMBER	REV.
UNIBUS TERMINATOR/BOOTSTRAP	D	CS	M93Ø1-Ø-1	W
SCALE —	SHEET 4 OF 5	DIST.		

DEC FORM NO. DRD 120

TW

"THIS DRAWING AND SPECIFICATIONS, HEREIN, ARE THE PROPERTY OF DIGITAL EQUIPMENT CORPORATION AND SHALL NOT BE REPRODUCED OR COPIED OR USED IN WHOLE OR IN PART AS THE BASIS FOR THE MANUFACTURE OR SALE OF ITEMS WITHOUT WRITTEN PERMISSION. COPYRIGHT © 1975 DIGITAL EQUIPMENT CORPORATION"

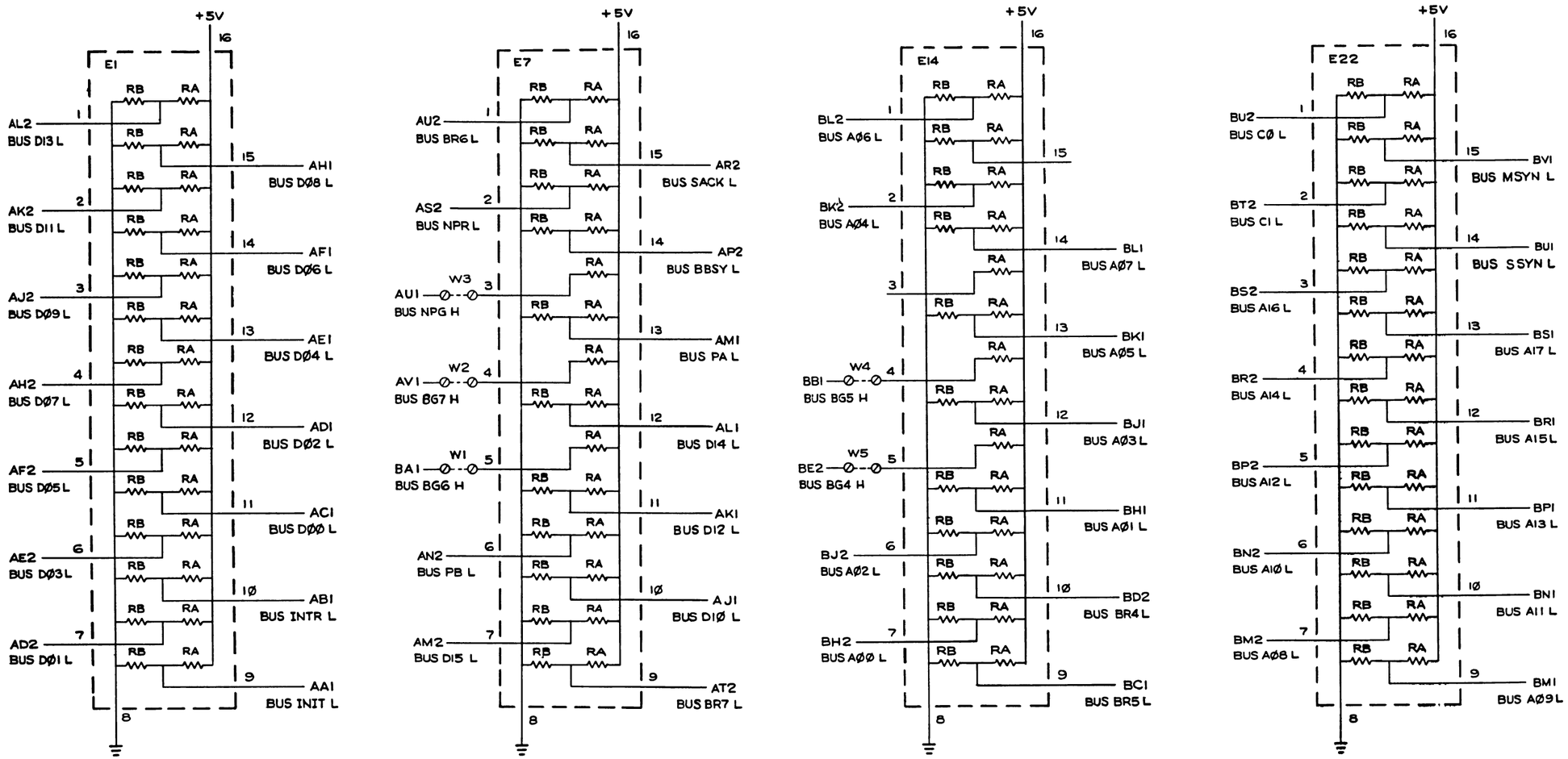

NOTES:

1. ALL RA RESISTORS SHOWN ARE 176.5Ω, ±2%
2. ALL RB RESISTORS SHOWN ARE 375Ω, ±2%
3. JUMPERS W1 THRU W5 ARE ONLY INSERTED ON THE M93Ø1-YC AND M93Ø1-YH IF USED IN AN 11/7Ø COMPUTER.

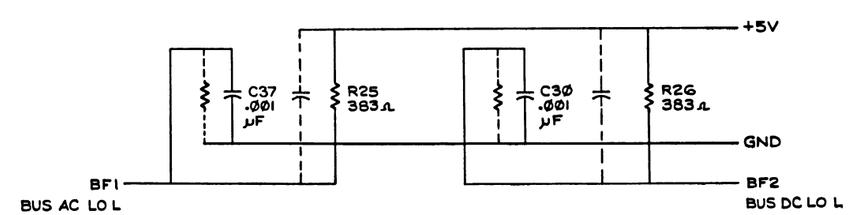

REVISIONS		
CHK	CHANGE NO	REV

TITLE	SIZE	CODE	NUMBER	REV.
UNIBUS TERMINATOR/BOOTSTRAP	D	CS	M93Ø1-Ø-1	W
SCALE —//— SHEET 5 OF 5	DIST.			

"THIS DRAWING AND SPECIFICATIONS, HEREIN ARE THE PROPERTY OF DIGITAL EQUIPMENT CORPORATION AND SHALL NOT BE REPRODUCED OR COPIED OR USED IN WHOLE OR IN PART AS THE BASIS FOR THE MANUFACTURE OR SALE OF ITEMS WITHOUT WRITTEN PERMISSION COPYRIGHT © 1974 DIGITAL EQUIPMENT CORPORATION"

NOTES:

1.) THE FOLLOWING REFERENCE DESIGNATIONS ARE NOT USED: C8, R64, AND R110.

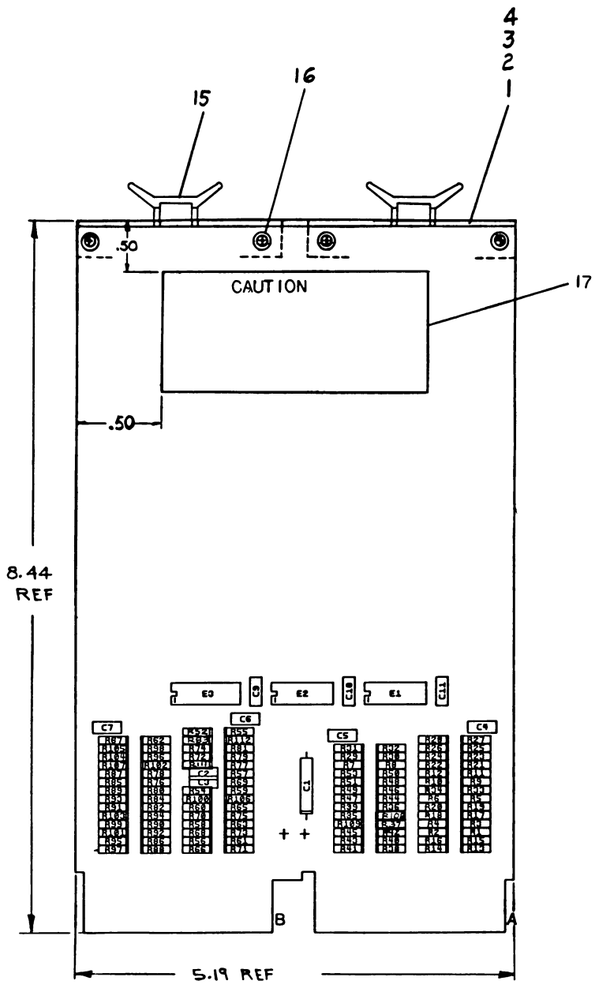

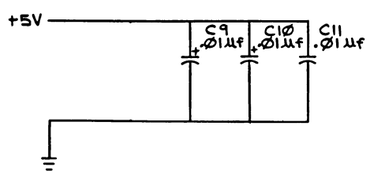

IC DEC 883T	8	16
IC TYPE	GND	+ 5V
GND AND 5V ARE USUALLY PIN 7 AND 14 RESPECTIVELY EXCEPTIONS ARE STATED ABOVE		
IC PIN LOCATIONS		

QTY	REF DESIGNATION	DESCRIPTION	PART NO	ITEM NO
REF		X-Y HOLE COORDINATE HOLE LOCATION	K-CO-M9302-0-4	1
REF		ASSY/DRILLING HOLE LAYOUT	D-AH-M9302-0-5	2
REF		MODULE ECO HISTORY	B-MH-M9302-0-6	3
1		ETCHED CIRCUIT BOARD	5011311	4
3	C9,C10,C11	CAP .01 uf 100V 20% DISC	1001610-01	5
1	C1	CAP 39 µf 10V 10%	1000078	6
~~1~~	~~C8~~	~~CAP 0.8 µf 35V 10%~~	~~1005398~~	~~7~~
4	C4 THRU C7	CAP .22 µf 50V X%	1010274-01	8
2	C2,C3	CAP .001 µf 250V 20% DISC	1000043	9
56	R2,R4,R6,R8,R10,R12,R14,R16 R18,R20,R22,R24,R26,R28,R30 R32,R34,R36,R38,R40,R42,R44 R46,R48,R50,R54,R56,R58,R60 R62,R66,R69,R70,R72,R74,R76 R78,R80,R92,R84,R86,R88,R90 R92,R94,R96,R98,R100,R102,R57,R68,R37,R52,R83,R108,R111	RES 383 OHM 1/4W 1%	1305125	10
54	R1,R3,R5,R7,R9,R11,R13,R15 R17,R19,R21,R23,R25,R27,R29 R31,R33,R35,R39,R41,R43,R45 R47,R49,R51,R53.R55, ,R59 R61,R63,R65,R67, ,R71,R73 R75,R77,R79,R81,R85,R87,R89 R91,R93,R95,R97,R99,R101, R103 THRU R107,R109,R112	RES 178 OH 1/4W 1%	1311422	11
1	E2	I.C. DEC 7430	1905578	12
1	E1	I.C. DEC 8881	1909705	13
1	E3	I.C. DEC 8837	1911116	14
2		HANDLE, FLIP-CHIP (MAGENTA)	9008337-8	15
4		EYELETS	9006732	16
1		DECAL	B-DC-7416791-0-0	17

PARTS LIST

FIRST USED ON OPTION MODEL

ETCH BOARD REV B

DEC NO	EIA NO	DEC NO	EIA NO

SEMICONDUCTOR CONVERSION CHART

REV	CHANGE NO	CHK
B	M9302-00001	
C	M9302-00001	
D	M9302-00002	

REVISIONS

B. BERNSTEIN 12/8/77 — 12/8/77
R. BARRY 14 JUNE 76 — 6-1-76
T. DUBANIEWICZ 6-23-76

DRN J. Nagle DATE 10/9/74
CHK D. DATE 12-13-75
ENG. DATE 8-25-75
PROJ ENG. DATE 7-25-75
PROD DATE 3/23/75

NEXT HIGHER ASSY

SCALE
SHEET 1 OF 2

digital EQUIPMENT CORPORATION MAYNARD MASSACHUSETTS

TITLE UNIBUS TERMINATOR

SIZE D CODE CS NUMBER M9302-0-1 REV. D

DIST

DEC FORM NO DRD 135 B

THIS DRAWING AND SPECIFICATIONS HEREIN ARE THE PROPERTY OF DIGITAL EQUIPMENT CORPORATION AND SHALL NOT BE REPRODUCED OR COPIED OR USED IN WHOLE OR IN PART AS THE BASIS FOR THE MANUFACTURE OR SALE OF ITEMS WITHOUT WRITTEN PERMISSION
COPYRIGHT © 1975 DIGITAL EQUIPMENT CORPORATION

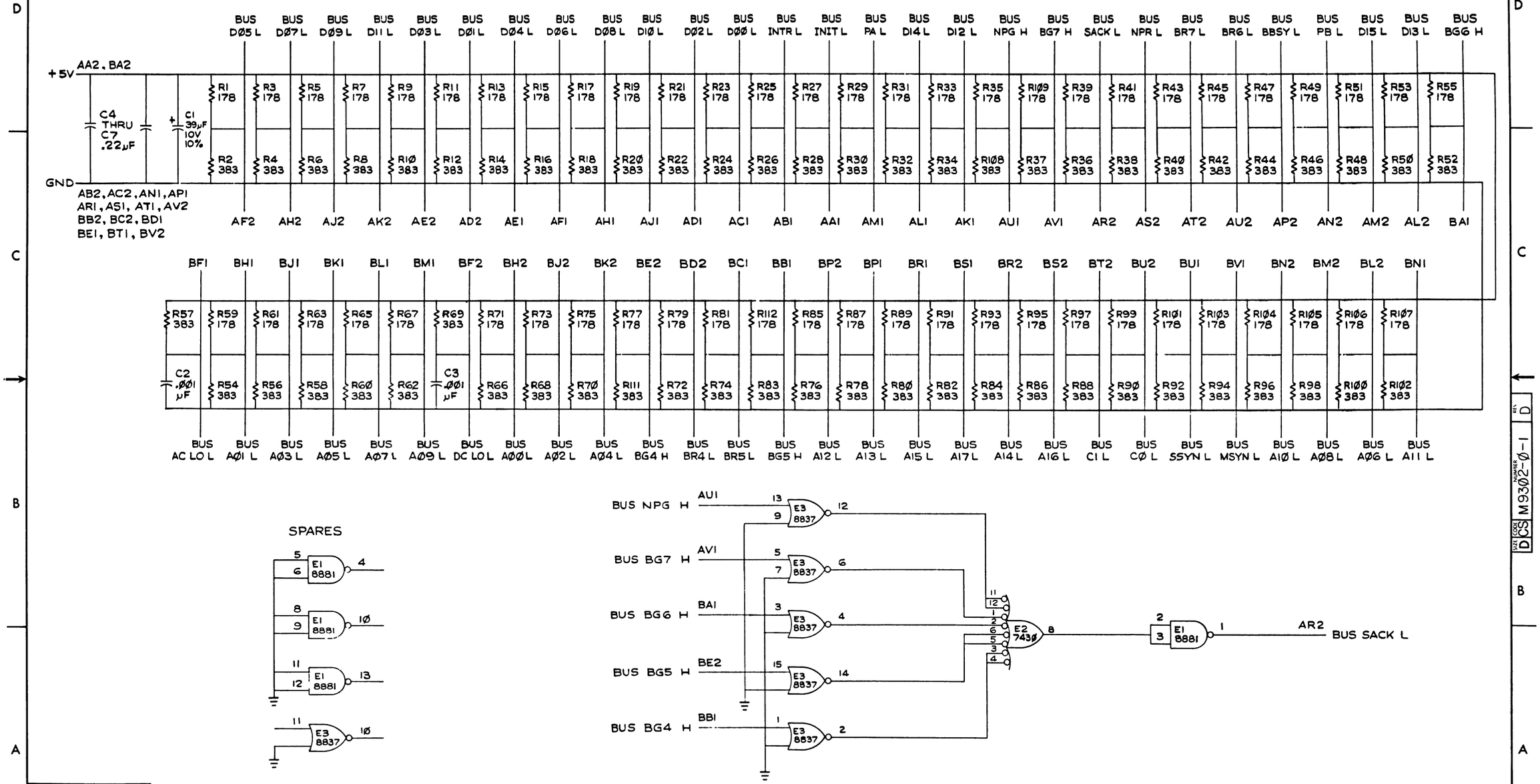

REVISIONS		
CHK	CHANGE NO	REV

TITLE	SIZE	CODE	NUMBER	REV
UNIBUS TERMINATOR	D	CS	M9302-0-1	D
SCALE —	SHEET 2 OF 2	DIST		

DEC FORM NO DRD 137

BLANK

"THE MATERIAL HEREIN IS FOR INFORMATION PURPOSES ONLY AND IS SUBJECT TO CHANGE WITHOUT NOTICE. DIGITAL EQUIPMENT CORPORATION ASSUMES NO RESPONSIBILITY FOR ANY ERRORS WHICH MAY APPEAR HEREIN."

FIELD MAINTENANCE PRINT SET

"THIS DRAWING AND SPECIFICATIONS, HEREIN, ARE THE PROPERTY OF DIGITAL EQUIPMENT CORPORATION AND SHALL NOT BE REPRODUCED OR COPIED OR USED IN WHOLE OR IN PART AS THE BASIS FOR THE MANUFACTURE OR SALE OF ITEMS WITHOUT WRITTEN PERMISSION. COPYRIGHT © 1975 DIGITAL EQUIPMENT CORPORATION."

TABLE OF CONTENTS

FIELD MAINT. PRINT SET KY11-LA	B-TC-KY11-LA-1
CONSOLE OPER. ASSY	D-UA-KY11-LA-Ø
CIRCUIT ETCH BOARD KY11-LA	D-CS-5411497-0-1
DRAWING DIRECTORY	B-DD-KY11-LA

UNIT VARIATIONS COVERED BY THIS PRINT SET
KY11-LA

KY11-LA

Field Maintenance Print Set

Digital Equipment Corporation

PRINT SET ORDER NO.
MPØØØ17

REVISIONS	
REV.	A
CHG. NO.	KY11-LA-3
DATE	5-77

USED ON OPTION/MODEL	
11/Ø4-AA	11/Ø4-DC
11/Ø4-AB	11/Ø4-DD
11/Ø4-AC	11/Ø4-EC
11/Ø4-AD	11/Ø4-ED
11/Ø4-BA	
11/Ø4-BB	
11/Ø4-BC	
11/Ø4-BD	
SHEET I OF 1	

DRN.	D. HEALY	DATE	9/29/75
CHK'D	D. HEALY	DATE	9/29/75
PROJ. ENG.	R. Barry	DATE	10-22-75
FIELD SERV.	[illegible]	DATE	10-22-75

digital

TITLE: FIELD MAINTENANCE PRINT SET KY11-LA

SIZE	CODE	NUMBER	REV
B	TC	KY11-LA-1	A

DIST.

DRB 124

EN-01124-10-M078-(227)

BLANK

"THIS DRAWING AND SPECIFICATIONS, HEREIN, ARE THE PROPERTY OF DIGITAL EQUIPMENT CORPORATION AND SHALL NOT BE REPRODUCED OR COPIED OR USED IN WHOLE OR IN PART AS THE BASIS FOR THE MANUFACTURE OR SALE OF ITEMS WITHOUT WRITTEN PERMISSION. COPYRIGHT © 1975 - DIGITAL EQUIPMENT CORPORATION"

NOTES

1. PART NO. 7413657-1-0 MAY BE USED IF 7415599 IS NOT AVAILABLE.
2. PRIOR TO ASSY. OF CONTROL PANEL TO SUPPORT PANEL, CLEAN ITEM 2 THOROUGHLY. AFTER CLEANING, APPLY THE ADHESIVE TRANSFER TAPE TO ITEM 2 ONLY TO AVOID ATTACHING THE SILK SCREENING POSITION ITEM 9 IN PLACE AND BOND
3. OVERLAY DECAL TO BE SHIPPED LOOSE PIECE WITH THE UNIT AND ADDED AS SHOWN IF REQUIRED AT F.A. & T.
4. ITEM #16 NOT SHOWN.
5. ITEMS NO'S 1, 11 AND 16 ARE ADDED AT FA & T.

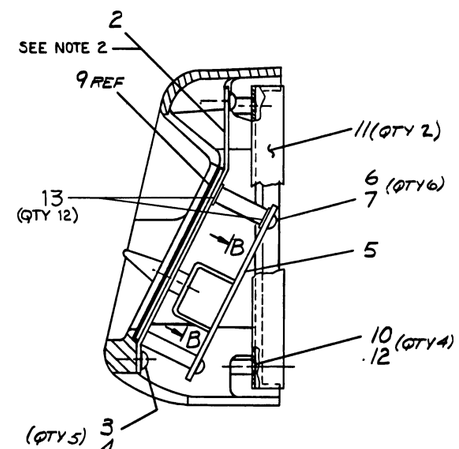

SECTION A-A
SCALE : 1/1

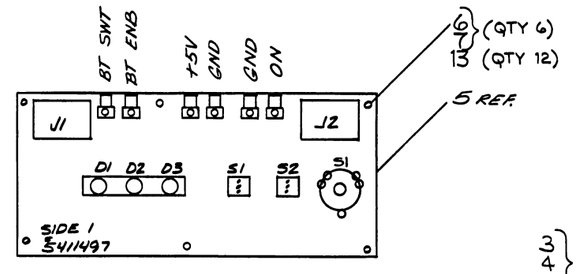

VIEW B-B
SCALE : NONE

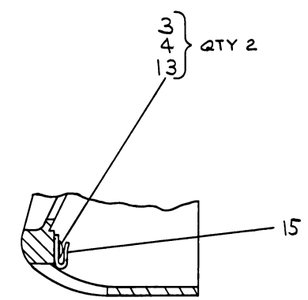

SECTION B-B
SCALE : NONE

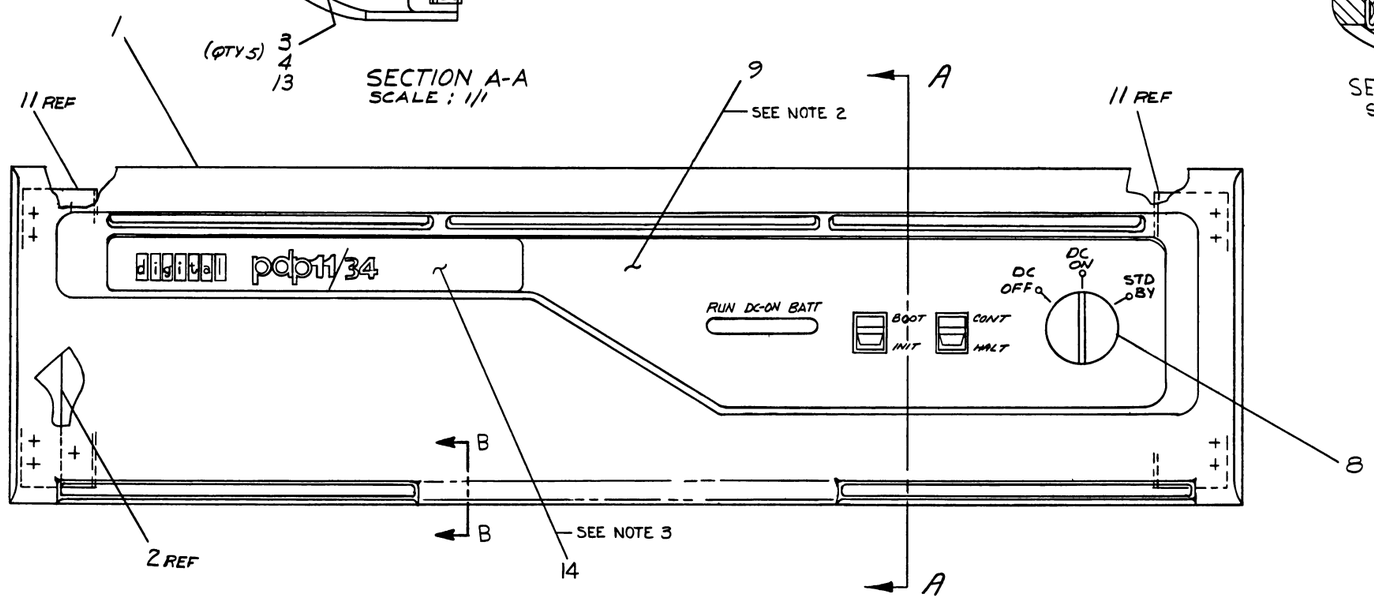

	A/R	TAPE, ADHESIVE TRANSFER	9009210	18
	~~(SEE NOTE 2) A/R~~	~~ADHESIVE, SPRAY~~	~~9008907~~	~~17~~
SEE NOTES 4 & 5	REF	BEZEL, COVER PROTECTIVE	D-MD-7415656-0-0	16
	1	BRACE, SUPPORT PNL	7419008	15
	1	OVERLAY, DECAL 11/34	A-PS-3613335-0-1	14
	19	WASHER, FLAT .375x.187x.036	9006660	13
	4	SPACER, HEX 1/4x.38 LG	9006802	12
SEE NOTE 5	REF	BRKT, FILTER SUPPORT	C-MD-7414962-0-0	11
	4	SCR, PHIL FL HD #8-32x.62	9006040-2	10
	1	PANEL, CONTROL, CONSOLE	D-IA-7413502-0-0	9
	1	KNOB, ROTARY SWITCH	1212570	8
	6	SCR PHIL HD PAN #8-32x.38	9006022-1	7
	6	SPACER #6-32x.87	9006861	6
	1	CIRCUIT ETCH BD KYII-LA	D-CS-5411497-0-1	5
	7	SCR FILL HD PAN #8-32x.31	9009799-00	4
	7	WASHER, SPRING LOCK #8	9006690	3
	1	SUPPORT, PANEL	D-MD-7413501-0-0	2
SEE NOTES 1 & 5	REF	BEZEL 11/04	E-MD-7415599-0-0	1
		DESCRIPTION	DWG /PART NO	ITEM NO

UNLESS OTHERWISE SPECIFIED DIMENSIONS ARE IN INCHES

ANGLES ±0° 30'	CLASS OF ACCURACY (CHECK ONE)	NOMINAL DIMENSION RANGE INCHES: OVER 0 TO .02	OVER .02 TO .12	OVER .12 TO 1.0	OVER 1.0 TO 12.0	OVER 12.0 TO 40.0	OVER 40.0 TO 80.0
SURFACE QUALITY IN MICROINCHES	MEDIUM	±.004	±.008	±.012	±.018	±.024	±.04
	PREFERRED	±.012	±.016	±.026	±.04	±.063	±0.1

QUANTITY & VARIATION

THIRD ANGLE PROJECTION

REMOVE BURRS AND BREAK SHARP CORNERS

DO NOT SCALE DWG

MATERIAL SEE PARTS LIST

FINISH

DRN Murini 9/26/75
CHK'D D. Shady 9/29/75
ENG. 9/26/75
PROJ. ENG. 9/26/75
PROD.

NEXT HIGHER ASSY. B-DD-KYII-LA

SCALE FULL

SHEET 1 OF 1

FIRST USED ON 11/04

digital

TITLE CONSOLE, OPER, ASSEMBLY

SIZE	CODE	NUMBER	REV.
D	UA	KYII-LA-Ø	H

DIST

REVISIONS				
CHK	CHANGE NO.	REV.		
	KYII-LA-00001	A	B. COURTEMANCHE	4 Jan 77
	KYII-LA-00002	B	P. PORRECA	5 Jan 77
	KYII-LA-00003	C	P. LORUSSO	5 April 77
	KYII-LA-00004	E	D. BARRY	8 DEC 77
	KYII-LA-TW0085	F	P. PORRECA	31 MAY 77
	KYII-LA-TW0096	H	E. CROCKER	6 Feb 79

REC FORM NO. ED 100-C

"THIS DRAWING AND SPECIFICATIONS HEREIN, ARE THE PROPERTY OF DIGITAL EQUIPMENT CORPORATION AND SHALL NOT BE REPRODUCED OR COPIED OR USED IN WHOLE OR IN PART AS THE BASIS FOR THE MANUFACTURE OR SALE OF ITEMS WITHOUT WRITTEN PERMISSION. COPYRIGHT © 1975 DIGITAL EQUIPMENT CORPORATION"

NOTES:

1. IN BA11-L BOXES, JUMPER MUST BE INSTALLED BETWEEN TB4 AND TB5. THE JUMPER IS ON PDP 1104 OR PDP 1134 PARTS LIST.
2. PART NO. 1001610-00 AND PART NO. 1001610-01 ARE INTERCHANGEABLE

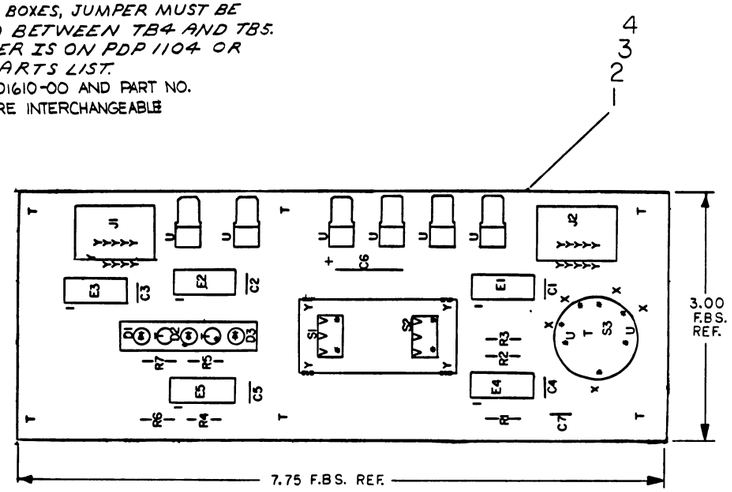

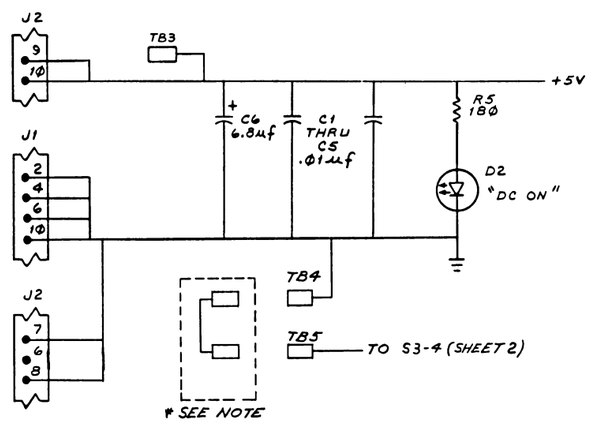

I.C. DEC 8640	1	8
IC TYPE	GND	+5V

GND AND 5V ARE USUALLY PIN 7 AND 14 RESPECTIVELY EXCEPTIONS ARE STATED ABOVE

IC PIN LOCATIONS

QTY	REF. DESIGNATION	DESCRIPTION	PART NO.	ITEM NO.
REF		X-Y COORDINATE HOLE LOCATION	K-CO-5411497-0-4	1
REF		ASSY/DRILLING HOLE LAYOUT	D-AH-5411497-0-5	2
REF		MODULE ECO HISTORY	B-MH-5411497-0-6	3
1		ETCHED CIRCUIT BOARD	5011496	4
5	C1 THRU C5	CAPACITOR, .01uf, 100V	1001610-01	5
1	C6	CAPACITOR, 6.8uf, 35V, 10%	1005306	6
1	C7	CAPACITOR, 1000PF, 100V	1000042	7
3	D1, D2, D3	DIODE, LIGHT EMITTING	1110864	8
1	S2	SWITCH, TOGGLE	1210840	9
1	S1	SWITCH, MOMENTARY	1210841	10
1	S3	SWITCH, ROTARY	1212560	11
1		HOLDER, TRIPLE L.E.D	1210940-02	12
2	J1, J2	CONNECTOR, 10 PIN	1209941-05	13
2	R4, R6	RESISTOR, 1K, 1/4W, 5%	1300365	14
3	R1, R5, R7	RESISTOR, 180Ω, 1/4W, 5%	1301322	15
1	E5	I.C. DEC 7474	1905547	16
1	E3	I.C. DEC 8640	1911469	17
2	E1, E2	I.C. DEC 8881	1909705	18
1	E4	I.C. DEC 7402	1909004	19
6		TERMINAL, QUICK DISCONNECT	9007112	20
6		EYELET	9009000	21
2		SCREW, SELF-TAPING, #4-40X.31 LG	9009236	22
1		PLATE; SWITCH MTG.	7413505-0-0	23
2	(S1), (S2)	KNOB	1210786	24
				25
				26
2	R2, R3	RESISTOR 330, 1/4W, 5%	1300295	27
~~A/R~~		~~WIRE, BUS #20~~	~~9107563-02~~	~~28~~
~~A/R~~		~~TUBING, NATURAL #20~~	~~9107267-11~~	~~29~~

PARTS LIST

ETCH BOARD REV. F

FIRST USED ON OPTION MODEL: 11/04

DEC NO.	EIA NO.	DEC NO.	EIA NO.

SEMICONDUCTOR CONVERSION CHART

REV.	CHANGE NO.	CHK
F	5411497-00002	GP
E	5411497-00001	GP

REVISIONS

BRUCE CRAMM 11-11-77
Bruce Cramm 23 Aug 77
5411497-00003 H
D. BARRY 28 Jul 77
D. Barry 23 Jul 77
5411497-00002 F
R. BARRY 26 May 76
5411497-00001

DRN. J. Vincent DATE 4-23-75
CHKD. DATE 8-12-75
ENG. DATE
PROJ. ENG. DATE
PROD. DATE
NEXT HIGHER ASSY
SCALE —
SHEET 1 OF 2

digital

TITLE KY11-LA

SIZE D CODE CS NUMBER 5411497-0-1 REV. H

DIST.

DEC FORM NO. DRD 128.0

"THIS DRAWING AND SPECIFICATIONS, HEREIN, ARE THE PROPERTY OF DIGITAL EQUIPMENT CORPORATION AND SHALL NOT BE REPRODUCED OR COPIED OR USED IN WHOLE OR IN PART AS THE BASIS FOR THE MANUFACTURE OR SALE OF ITEMS WITHOUT WRITTEN PERMISSION.
COPYRIGHT © 1975 DIGITAL EQUIPMENT CORPORATION"

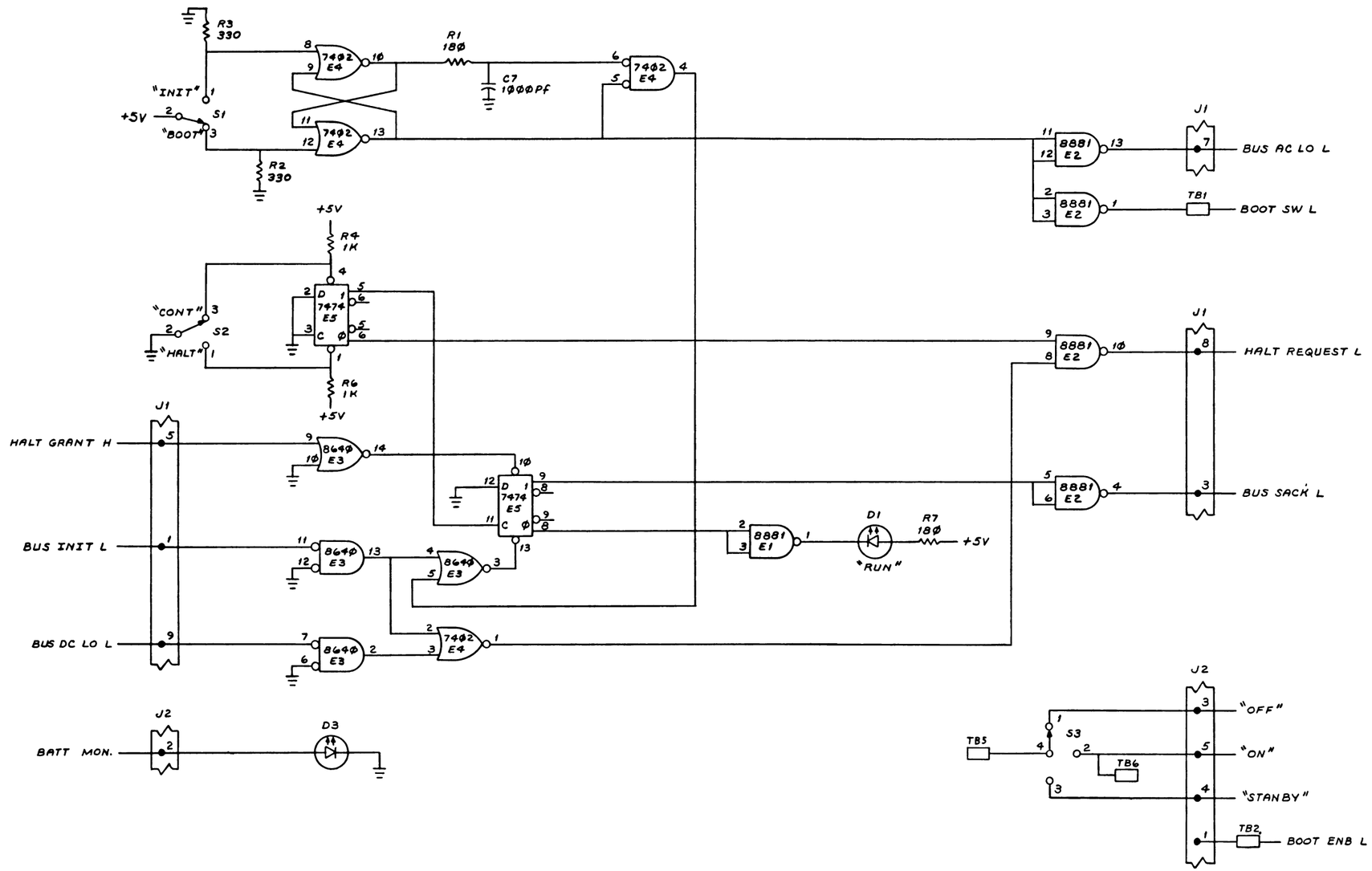

REVISIONS		
CHK	CHANGE NO	REV

TITLE	SIZE	CODE	NUMBER	REV.
KY11-LA	D	CS	5411497-0-1	H
SCALE —	SHEET 2 OF 2	DIST.		

BSC FORM NO. 5850 120

BLANK

digital EQUIPMENT CORPORATION MAYNARD MASSACHUSETTS

DRAWING DIRECTORY

"THIS DRAWING AND SPECIFICATIONS, HEREIN, ARE THE PROPERTY OF DIGITAL EQUIPMENT CORPORATION AND SHALL NOT BE REPRODUCED OR COPIED OR USED IN WHOLE OR IN PART AS THE BASIS FOR THE MANUFACTURE OR SALE OF ITEMS WITHOUT WRITTEN PERMISSION. COPYRIGHT © 1975 , DIGITAL EQUIPMENT CORPORATION"

~~CUSTOMER PRINT SET INDEX~~

SEQUENCE

SEQUENCE

~~THIS IS PRINT SET~~

NOTE:
FOR FIELD MAINTENANCE
PRINT SET REFER TO
B-TC-KY11-LA-1

UNIT VARIATIONS		PRINT SET
VAR	TITLE	
KY11-LA	OPER TURNKEY CONSOLE	

REVISIONS		
DATE	CHG. NO.	REV
5-76	KY11-LA-1	A
1-77	KY11-LA-2	B
5-77	KY11-LA-3	C
12-77	KY11-LA-4	D
8-78	KY11-LA-5	E

USED ON OPTION/MODEL	
11/Ø4-AA	11/Ø4-BD
11/Ø4-AB	11/Ø4-DC
11/Ø4-AC	11/Ø4-DD
11/Ø4-AD	11/Ø4-EC
11/Ø4-BA	11/Ø4-ED
11/Ø4-BB	
11/Ø4-BC	
SHEET 1 OF 2	

DRN. G. MARINI	DATE 9/16/75	TITLE DRAWING DIRECTORY KY11-LA	
CHK'D. D. HEALY	DATE 9/30/75		
PROJ ENG. R. Barry	DATE 10-22-75		
PROD. R.K. Peterson	DATE 10/22/75	SIZE B. / CODE DD / NUMBER KY11-LA	REV E
~~PROD. ENG.~~ — // —	~~DATE~~ — // —	DIST	

EN-01062-1-1-4-R672-(323)

DRB 106

ELECTRICAL (SECTION 1)

CUSTOMER PRINT SET	FIND NO.	DRAWING NO.	REV	NO OF SHT	DESCRIPTION	OPTION NO. FILE DATE
	1	D-UA-KY11-LA-Ø		1	CONSOLE OPER ASSY	
	3	D-CS-5411497-0-1		2	CIRCUIT ETCH BOARD KY11-LA	

MECHANICAL (SECTION 2)

CUSTOMER PRINT SET	FIND NO.	DRAWING NO.	REV	NO OF SHT	DESCRIPTION	OPTION NO. FILE DATE
	1	D-UA-KY11-LA-Ø		1	CONSOLE OPER ASSY	
		D-MD-7413501-0-0		1	SUPPORT, PANEL	
		C-MD-7419008		1	BRACE, SUPPORT PANEL	
	2	D-IA-7413502-0-0		1	PANEL CONTROL CONSOLE	
		D-SS-7413502-0-1		1	SILK SCREEN LIGHT GRAY	
		D-SS-7413502-0-2		1	SILK SCREEN DARK GRAY	
	3	D-CS-5411497-0-1		2	CIRCUIT ETCH BOARD KY11-LA	
		K-CO-5411497-0-4			X-Y COORDINATE HOLE LOCATION	
		D-AH-5411497-0-5			ASSY/DRILLING HOLE LAYOUT	
		B-MH-5411497-0-6			MODULE ECO HISTORY	
		5011496			ETCH CIRCUIT BOARD	
		C-MD-7413505-0-0		1	PLATE, SW MTG	

CUSTOMER PRINT SET CODES
X = PRINT OF DOCUMENT INCLUDED IN PRINT SET
C = INCLUDED AS PARTS INDICATED ON DOCUMENT
S = CONFIDENTIAL AUTHORIZED SIGNATURE REQUIRED

TITLE	SHEET	SIZE	CODE	NUMBER	REV
DRAWING DIRECTORY KY11-LA	2 OF 2	B	DD	KY11-LA	E

DRB 108

[redacted] EN-01663-2B-16-R972-(325)

"THE MATERIAL HEREIN IS FOR INFORMATION PURPOSES ONLY AND IS SUBJECT TO CHANGE WITHOUT NOTICE. DIGITAL EQUIPMENT CORPORATION ASSUMES NO RESPONSIBILITY FOR ANY ERRORS WHICH MAY APPEAR HEREIN."

FIELD MAINTENANCE PRINT SET

"THIS DRAWING AND SPECIFICATIONS, HEREIN, ARE THE PROPERTY OF DIGITAL EQUIPMENT CORPORATION AND SHALL NOT BE REPRODUCED OR COPIED OR USED IN WHOLE OR IN PART AS THE BASIS FOR THE MANUFACTURE OR SALE OF ITEMS WITHOUT WRITTEN PERMISSION. COPYRIGHT © 1975 , DIGITAL EQUIPMENT CORPORATION."

TABLE OF CONTENTS

FIELD MAINT. PRINT SET KY11-LB	B-TC-KY11-LB-1
CONSOLE ASSY PROGRAMMERS	D-UA-KY11-LB-Ø
CIRCUIT ETCH BOARD KY11-LB	D-CS-5411800-0-1
CIRCUIT, INTERFACE, PROG. CONSOLE	D-CS-M7859-Ø-1
DRAWING DIRECTORY	B-DD-KY11-LB

UNIT VARIATIONS COVERED BY THIS PRINT SET
KY11-LB

KY11-LB

Field Maintenance Print Set

Digital Equipment Corporation

PRINT SET ORDER NO.
MPØØØ15

REVISIONS		
REV.	A	
CHG. NO.	KY11-LB-3	
DATE	5-24-77	

USED ON OPTION/MODEL	
11/34	

SHEET I OF 1

DRN.	D. HEALY	DATE 11/5/75
CHK'D	D. HEALY	DATE 11/6/75
PROJ. ENG.	R.B PRATT	DATE 12-11-75
FIELD SERV.	[illegible]	DATE 1-5-76

digital

TITLE: FIELD MAINTENANCE PRINT SET KY11-LB

SIZE	CODE	NUMBER	REV.
B	TC	KY11-LB-1	A

DIST.

EN 01124 16 N675(327)

DRB 124

BLANK

"THIS DRAWING AND SPECIFICATIONS HEREIN, ARE THE PROPERTY OF DIGITAL EQUIPMENT CORPORATION AND SHALL NOT BE REPRODUCED OR COPIED OR USED IN WHOLE OR IN PART AS THE BASIS FOR THE MANUFACTURE OR SALE OF ITEMS WITHOUT WRITTEN PERMISSION. COPYRIGHT © , DIGITAL EQUIPMENT CORPORATION"

NOTES:

1. ITEM #14 NOT SHOWN ON THIS ASSY, TO BE SUPPLIED AS LOOSE PIECE - 2 REQ'D
2. PART #7413657-1-0 MAY BE USED WHEN 7415599 IS NOT AVAILABLE.
3. PRIOR TO ASSY OF PROGRAMMERS PANEL TO SUPPORT PANEL, CLEAN ITEM 2 THOROUGHLY. AFTER CLEANING, APPLY THE ADHESIVE TRANSFER TAPE TO ITEM 2 ONLY TO AVOID ATTACHING THE SILK SCREENING. POSITION ITEM 8 IN PLACE AND BOND
4. OVERLAY DECAL TO BE SHIPPED LOOSE PIECE WITH THE UNIT AND ADDED AS SHOWN IF REQUIRED AT FA&T
5. ITEMS NO. 1 AND 10 ARE ADDED AT FA&T.

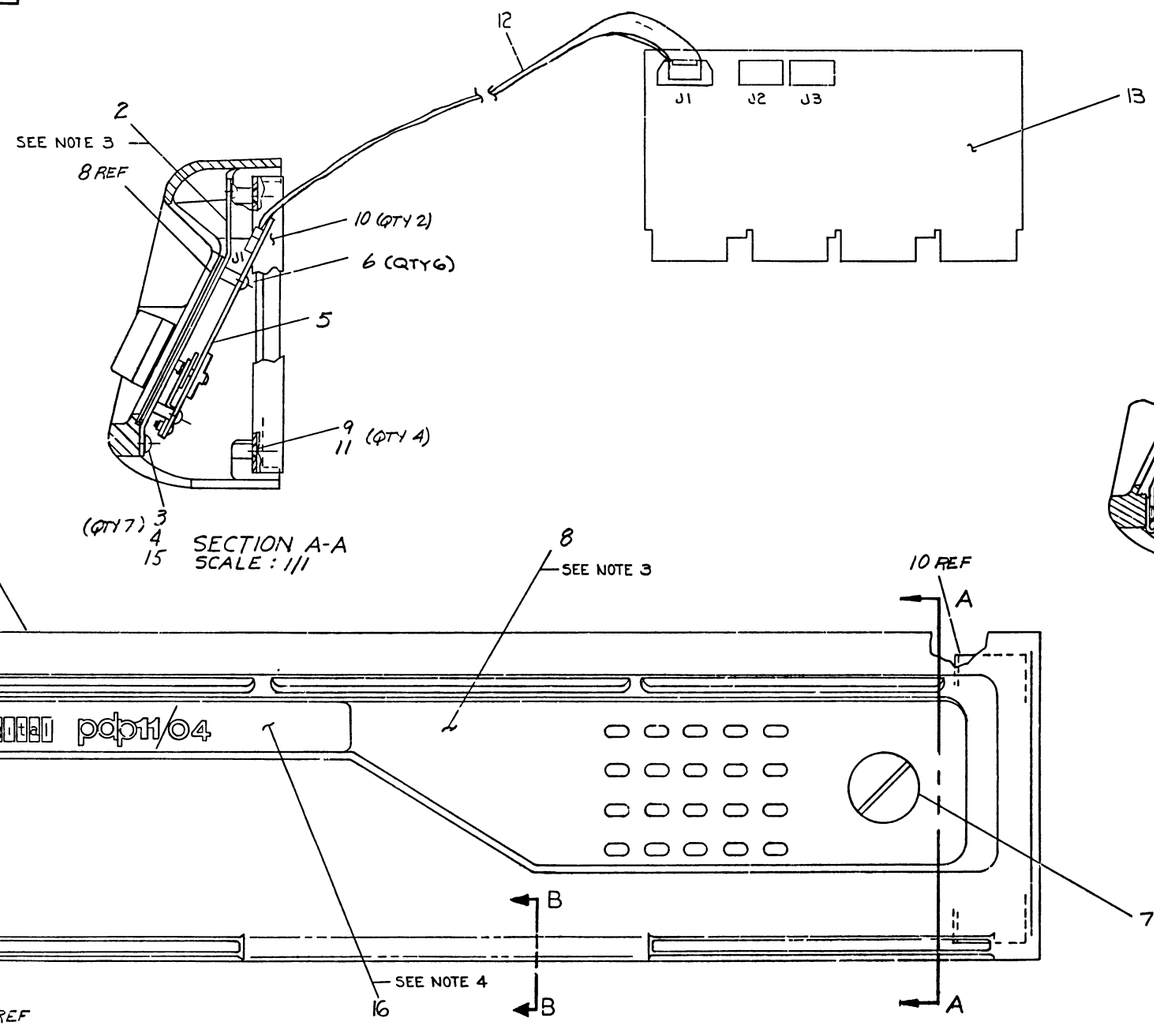

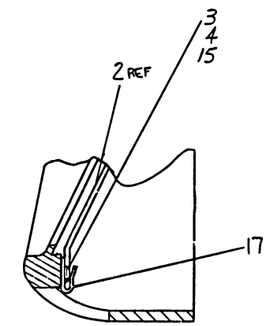

SECTION B-B
SCALE: NONE

A/R	TAPE, ADHESIVE TRANSFER	9009210		18
1	BRACE, SUPPORT PAN.	C-MD-7419008-00		17
1	OVERLAY, DECAL 11/04	A-PS-3613359-0-0		16
7	WASHER, FLAT, .375×.187×.036	9006660		15
2	CABLE CONS TO BACKPLANE	C-IA-7011411-1D-0		14
1	INTERFACE, PROG CNSL	D-CS-M7859-0-1		13
1	CABLE, CNSL TO M7859	D-IA-7012214-0-0		12
4	SPACER HEX 1/4×.38L	9006802		11
SEE NOTE 5 REF	BRKT FILTER SUPPORT	C-MD-7414962-0-0		10
4	SCR PHIL FL HD #8-32×.62	9006040-2		9
1	PANEL, PROGRAMMERS	D-IA-7415047-0-0		8
1	KNOB, ROTARY	1212570		7
6	SCR PHIL HD PAN #6-32×.38	9006022-1		6
1	CIRCUIT ETCH BD KY11-LB	D-CS-5411800-0-1		5
7	SCR FILL HD PAN #8-32×.31	9009799-00		4
7	WASHER, SPRING LOCK	9006690		3
1	SUPPORT, PANEL	D-IA-7415048-0-0		2
SEE NOTE 5 REF	BEZEL 11/04	E-MD-7415599-0-0		1
	DESCRIPTION	DWG/PART NO		ITEM NO

UNLESS OTHERWISE SPECIFIED DIMENSIONS ARE IN INCHES

ANGLES ±0° 30'	CLASS OF ACCURACY (CHECK ONE)	OVER 0 TO 0.3	OVER 0.3 TO 1.2	OVER 1.2 TO 4.0	OVER 4.0 TO 12.0	OVER 12.0 TO 40.0	OVER 40.0 TO 80.0
SURFACE QUALITY IN MICROINCHES	MEDIUM	±.004	±.008	±.012	±.016	±.024	±.04
	PREFERRED	±.012	±.016	±.025	±.04	±.063	±0.1

QUANTITY & VARIATION

THIRD ANGLE PROJECTION

REMOVE BURRS AND BREAK SHARP CORNERS

DO NOT SCALE DWG

MATERIAL —"—

FINISH —"—

DRN 11/5/73
CHK'D 11/21/73
ENG 11/21/73
PROJ. ENG 11-25
PROD 21/12/73

NEXT HIGHER ASSY

B-DD-KY11-LB

SCALE —"—

SHEET 1 OF 1

FIRST USED ON 11/54

digital

TITLE CONSOLE ASSY PROGRAMMERS

SIZE	CODE	NUMBER	REV.
D	11A	KY11-LB Ø	F

DIST

REVISIONS

NO.	CHANGE NO	REV
1	KY11-LB-00001	A
2	KY11-LB-00002	B
3	KY11-LB-00003	C
4	KY11-LB-00003	D
5	KY11-LB-TW004	E
6	KY11LB-TW005	F

"THIS DRAWING AND SPECIFICATIONS, HEREIN, ARE THE PROPERTY OF DIGITAL EQUIPMENT CORPORATION AND SHALL NOT BE REPRODUCED OR COPIED OR USED IN WHOLE OR IN PART AS THE BASIS FOR THE MANUFACTURE OR SALE OF ITEMS WITHOUT WRITTEN PERMISSION. COPYRIGHT © 1975 DIGITAL EQUIPMENT CORPORATION"

NOTES:

1. ARROW ON BOARD IS TO LINE UP WITH ARROW ON CONNECTOR (J1 & J2).

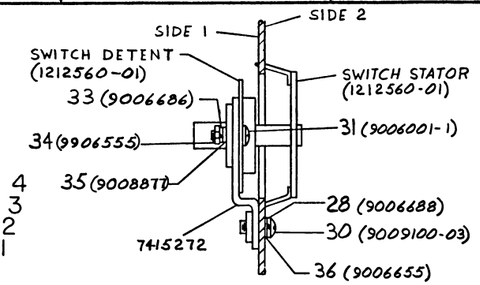

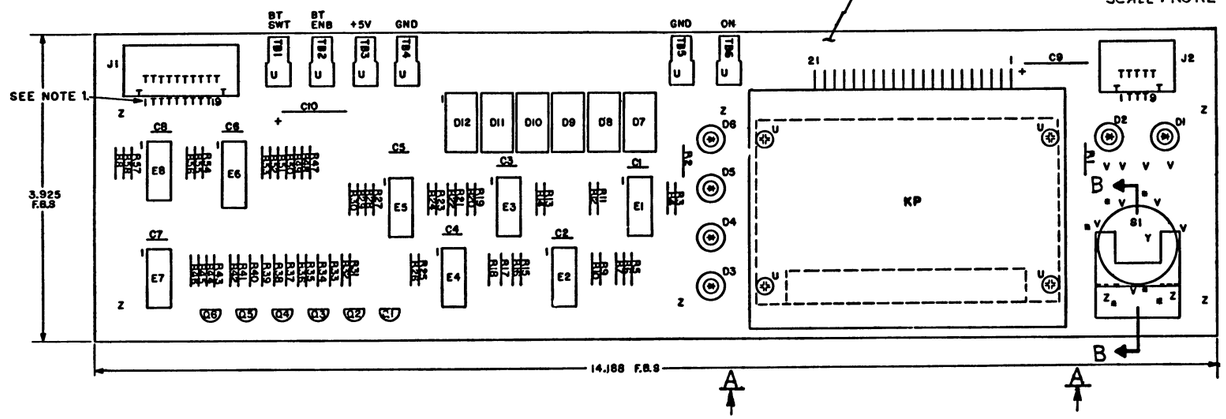

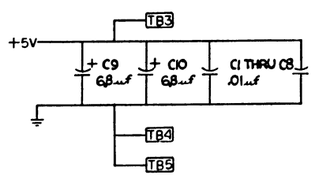

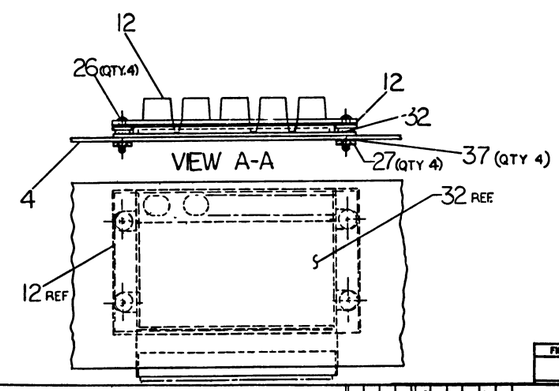

QTY	REF. DESIGNATION	DESCRIPTION	PART NO.	ITEM NO.
REF		X-Y COORDINATE HOLE LOCATION	K-CO-5411800-0-4	1
REF		ASSY/DRILLING HOLE LAYOUT	D-AH 5411800-0-5	2
REF		MODULE ECO HISTORY	B-MH 5411800-0-6	3
1		ETCHED CIRCUIT BOARD	5011799	4
8	C1 THRU C8	CAPACITOR, .01uf, 100V, 20%	1001610-01	5
2	C9,C10	CAPACITOR, 6.8uf, 35 VDC, 10%	1005306	6
6	D1 THRU D6	DIODE, LIGHT EMITTING	1110884	7
6	D7 THRU D12	7 SEGMENT, DISPLAY	1911297	8
1	J1	CONNECTOR, 20 PIN	1209941-06	9
1	J2	CONNECTOR, 10 PIN	1209941-05	10
1	S1	SWITCH, ROTARY, 3 POSITION	1212560-01	11
1	KP	KEYPAD	1211858	12
6	D7 THRU D12	SOCKET, 14 PIN	1211813-01	13
12	R1,R2,R5,R6,R7,R47 THRU R53	RESISTOR, 150 OHM, 1/4W, 5%	1300250	14
10	R32,R34,R36,R38,R40,R42,R27 THRU R30	RESISTOR, 1K, 1/4W, 5%	1300365	15
6	R31,R33,R35,R37,R39,R41	RESISTOR, 620 OHM, 1/4W, 5%	1303178	16
30	R3,R4,R8 THRU R26,R43 THRU R46,R54 THRU R58	RESISTOR, 10K, 1/4W, 5%	1300479	17
6	Q1 THRU Q6	TRANSISTOR, MPSA55	1510706	18
1	E8	I.C. DEC 7404	1909888	19
1	E7	I.C. DEC 7417	1909929	20
1	E6	I.C. DEC 7447A	1911295	21
5	E1 THRU E5	I.C. DEC 8881	1909705	22
6		EYELET	9009000	23
6	TB1 THRU TB6	TERMINAL, QUICK DISCONNECT	9007112	24
6		WASHER, SHOULDER	9008318	25
4		SCREW, PHILLIPS #4/40 x 9/16 LG	9008033-01	26
4		NUT, KEP #4/40	9006557	27
2		WASHER, LOCK #4	9006688	28
1		BRACKET, SWITCH	7415272	29
2		SCREW, PHILLIPS # 4/40 X 1/4 LG	9009100-03	30
2		SCREW PHILLIPS #2-56 X 1/4LG	9006001-1	31
1		RETAIN, KEY BOARD ASSY.	C-IA-703177-0-0	32
2		WASHER, LOCK #2	9006686	33
2		NUT, HEX	9006555	34
2		WASHER, FLAT #2	9008877	35
2		WASHER, FLAT #4	9006655	36
4		WASHER, NYLON	9006706	37

PARTS LIST

FIRST USED ON OPTION MODEL

ETCH BOARD REV. C

I.C. DEC 7447A	8	16
IC TYPE	GND	+5V

GND AND 5V ARE USUALLY PIN 7 AND 14 RESPECTIVELY EXCEPTIONS ARE STATED ABOVE

IC PIN LOCATIONS

DEC NO.	EIA NO.	DEC NO.	EIA NO.

SEMICONDUCTOR CONVERSION CHART

REV	CHANGE NO.	CHK	REVISIONS
C	5411800-00001	B. BERNSTEIN 7-SEP-76	Revised to Draft 5-Jan-77 B. PRATT
D	5411800-00002	17-DEC-76	

DRN. J. Vincent 9-19-75
CHKD. 11-21-75
ENG. 11-26-75
PROJ. ENG. 11-26-75
PROD. 2-3-76
NEXT HIGHER ASSY
SCALE
SHEET 1 OF 3

digital

TITLE KYII-LB (CONSOLE BOARD)

SIZE D CODE CS NUMBER 5411800-0-1 REV. D

DIST.

DEC FORM NO. DRD 125.8

"THIS DRAWING AND SPECIFICATIONS, HEREIN ARE THE PROPERTY OF DIGITAL EQUIPMENT CORPORATION AND SHALL NOT BE REPRODUCED OR COPIED OR USED IN WHOLE OR IN PART AS THE BASIS FOR THE MANUFACTURE OR SALE OF ITEMS WITHOUT WRITTEN PERMISSION
COPYRIGHT © 1975 DIGITAL EQUIPMENT CORPORATION"

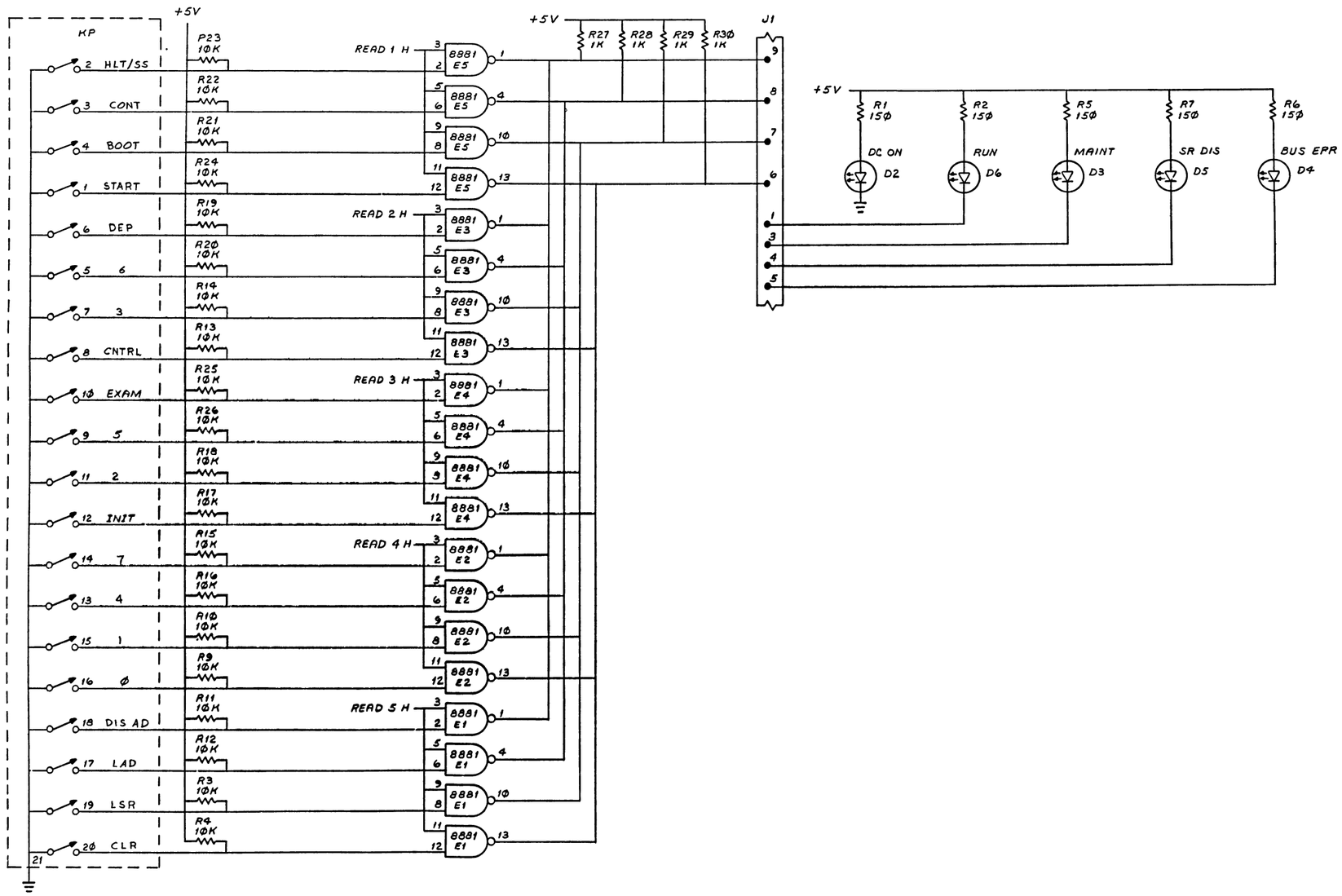

REVISIONS		
CHK	CHANGE NO	REV

TITLE	SIZE	CODE	NUMBER	REV.
KYII-LB (CONSOLE BOARD)	D	CS	5411800-0-1	D
SCALE —//—	SHEET 2 OF 3	DIST.		

DEC FORM NO.

"THIS DRAWING AND SPECIFICATIONS, HEREIN ARE THE PROPERTY OF DIGITAL EQUIPMENT CORPORATION AND SHALL NOT BE REPRODUCED OR COPIED OR USED IN WHOLE OR IN PART AS THE BASIS FOR THE MANUFACTURE OR SALE OF ITEMS WITHOUT WRITTEN PERMISSION COPYRIGHT © 1975 DIGITAL EQUIPMENT CORPORATION"

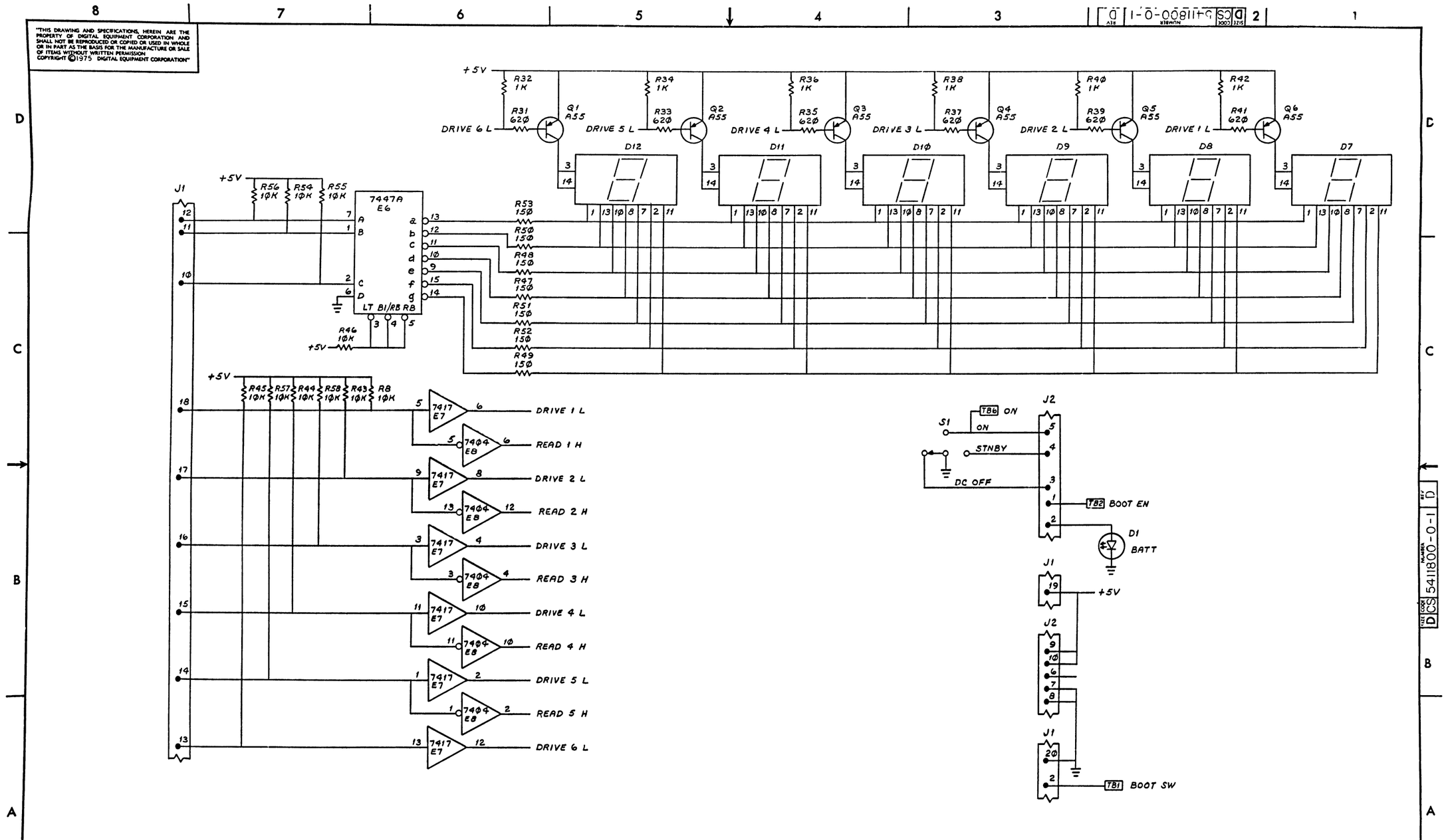

REVISIONS		
CHK	CHANGE NO	REV

TITLE	SIZE	CODE	NUMBER	REV.
KYII-LB (CONSOLE BOARD)	D	CS	5411800-0-1	D
SCALE — // —	SHEET 3 OF 3	DIST		

DEC FORM NO. DRD 138

THIS DRAWING AND SPECIFICATIONS, HEREIN ARE THE PROPERTY OF DIGITAL EQUIPMENT CORPORATION AND SHALL NOT BE REPRODUCED OR COPIED OR USED IN WHOLE OR IN PART AS THE BASIS FOR THE MANUFACTURE OR SALE OF ITEMS WITHOUT WRITTEN PERMISSION.
COPYRIGHT © 197 DIGITAL EQUIPMENT CORPORATION"

NOTES:

4	E14,20,31,37	IC DEC 74173	1911330	S2	REF
1	W1	JUMPER INSULATED	9009185	S3	REF

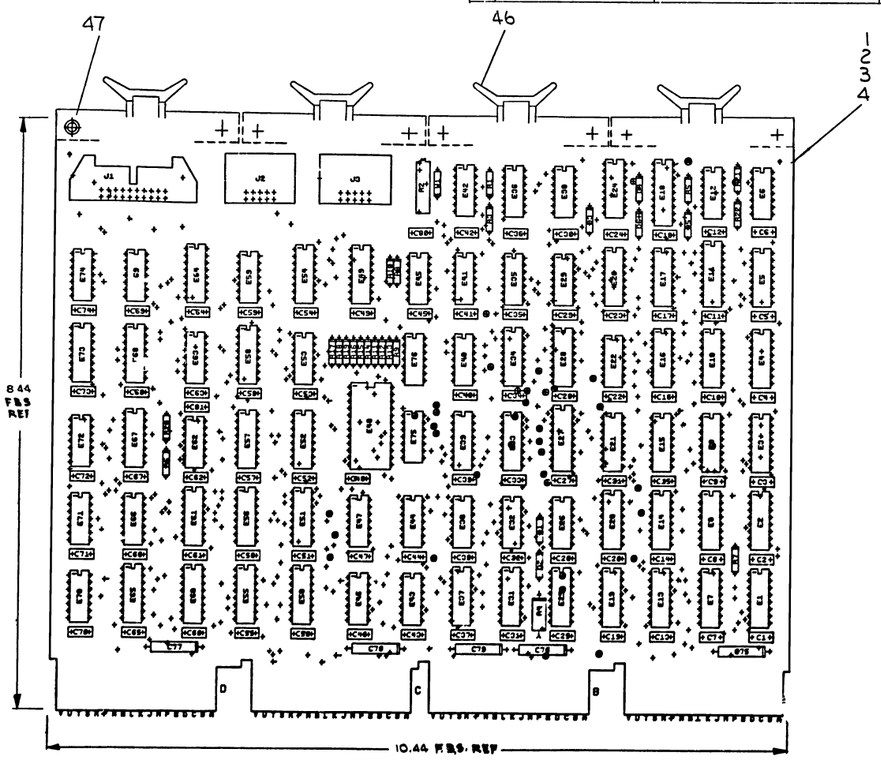

IC 74S133	8	16
IC 8641	8	16
IC 8837	8	16
IC MC4024P	9	13
IC 74175	8	16
IC 7442	8	16
IC 314	1	8
IC 74154	12	24
IC 7493	10	5
IC TYPE	GND	+5V

GND AND 5V ARE USUALLY PIN 7 AND 14 RESPECTIVELY EXCEPTIONS ARE STATED ABOVE

IC PIN LOCATIONS

QTY	REF. DESIGNATION	DESCRIPTION	PART NO.	ITEM NO
REF		X-Y COORDINATE HOLE LOCATION	K-CO-M7859-0-4	1
REF		ASSY/DRILLING HOLE LAYOUT	D-AH M7859-0-5	2
REF		MODULE ECO HISTORY	B MH-M7859-0-6	3
1		ETCHED CIRCUIT BOARD	5011756	4
1	C80	CAPACITOR, 270pf, 100V, 5%	1000022	5
1	C81	CAPACITOR, 470pf, 100V, 5%	1000024	6
74	C1 THRU C74	CAPACITOR, .01uf, 100V, 20% DISC	1001610-01	7
5	C75 THRU C79	CAPACITOR, 6.8uf, 35V, 10%	1005308	8
1	D2	DIODE, IN748 A	1100122	9
4	D3 THRU D6	DIODE, D872	1105275	10
1	D1	DIODE, IN751 A	1110994	11
2	J2,J3	CONNECTOR, 10 PIN, 3M	1209941-05	12
1	J1	CONNECTOR, 20 PIN, 3M	1209941-06	13
1	E18	SOCKET I C	1211666	14
1	R20	RESISTOR, 100 OHM, 1/4W, 5%	1300229	15
1	R4	RESISTOR, 120 OHM, 1/2W, 5%	1300245	16
1	R21	RESISTOR, 220 OHM, 1/4W, 5%	1300271	17
3	R5,R6,R7	RESISTOR, 1K, 1/4W, 5%	1300365	18
12	R8 THRU R19	RESISTOR, 10K, 1/4W, 5%	1300479	19
1	R22	RESISTOR, 750 OHM, 1/4W, 5%	1301401	20
1	R3	RESISTOR, 6.8K, 1/4W, 5%	1301423	21
1	R1	RESISTOR, 5.6K, 1/4W, 5%	1301874	22
1	R2	RESISTOR, 10K, 3/4W, 10% POT 78 PR	1309143-10	23
4	E6,E12,E63,E75	I C. DEC 7474	1905547	24
2	E29,E30	I C DEC 7402	1909004	25
1	E38	I C DEC 7493	1909054	26
2	E40,E47	I C DEC 7404	1909888	27
1	E48	I C DEC 74154	1909701	28
1	E32	I C DEC 314	1909704	29
2	E43,E62	I C. DEC 8881	1909705	30
3	E68,E69,E72	I C DEC 7417	1909929	31
1	E23	I C DEC 7442	1910046	32
3	E28,E53,E76	I C. DEC 7408	1910155	33
18	E2,E4,E5,E9,E10,E15,E19, E28,E51,E52,E58,E57,E64, E67,E68,E73	I C. DEC 74175	1910651	34
10	E35, ,E36, E41,E44,E45,E48,E59,E70, E71,E74	I C. DEC 8093	1910837	35
1	E22	I C DEC 7427	1910878	36
1	E42	I C DEC MC4024 P	1911038	37
4	E1,E24,E49,E54	I C DEC 8837	1911116	38
9	E7,E8,E13,E25,E50,E55,E56, E61,E65	I C DEC 8641	1911579	39
1	E60	I C DEC 74S133	1911983	40
2	E16,E17	I C DEC 8833	1912099	41
2	E11,E27	I C DEC 85568	1912586	42
1	E10	I C DEC 8008-1	2111644	43
1		SPLIT LUG	9006735	44
1	E34	I C DEC PROM 32 x 8 TRI STATE	23123A1	45
4		HANDLE (FLIP CHIP)	9008337-8	46
8		EYELET	9008732	47
1	E33	I C DEC PROM 512 x 4 TRI STATE	23345A9	48
1	E39	I. C. DEC PROM 512 x 4 TRI STATE	23346A9	49
1	E3	I C DEC PROM 512 x 4 TRI STATE	23347A9	50
1	E21	I C. DEC PROM 512 x 4 TRI STATE	23348A9	51

PARTS LIST

FIRST USED ON OPTION MODEL

ETCH BOARD REV D

DEC NO.	EIA NO.	DEC NO.	EIA NO.

SEMICONDUCTOR CONVERSION CHART

REV	CHANGE NO.	CHK
D	M7859-00002	B PRATT 11/2/77 D DINGELDEY
C	M7859-0001	B. PRATT

DRW 10/21/75
CHK D. DATE
ENG DATE 12-4-75
PROJ ENG. DATE 12-4-75
PROG DATE 12-2-76
NEXT HIGHER ASSY
SCALE
SHEET 1 OF 18

digital

TITLE INTERFACE, PROGRAMMER'S CONSOLE

SIZE	CODE	NUMBER	REV.
D	CS	M7859-0-1	D

DIST.

DEC FORM NO DRD 3 10 8

"THIS DRAWING AND SPECIFICATIONS, HEREIN, ARE THE PROPERTY OF DIGITAL EQUIPMENT CORPORATION AND SHALL NOT BE REPRODUCED OR COPIED OR USED IN WHOLE OR IN PART AS THE BASIS FOR THE MANUFACTURE OR SALE OF ITEMS WITHOUT WRITTEN PERMISSION. COPYRIGHT © 1975 DIGITAL EQUIPMENT CORPORATION"

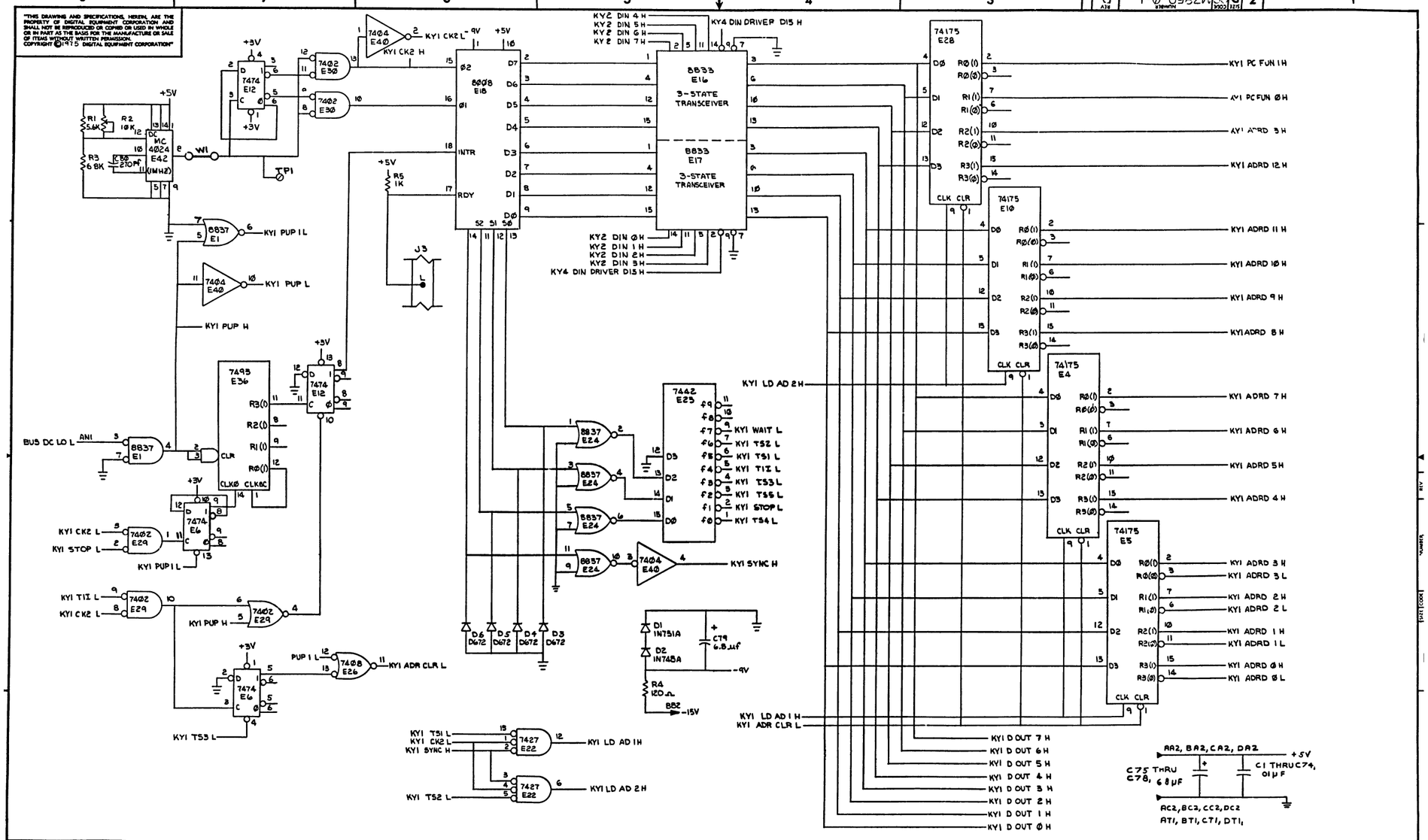

REVISIONS		
CHK	CHANGE NO	REV

TITLE INTERFACE (KY-1) PROGRAMMERS CONSOLE

SIZE D CODE CS NUMBER M7859-0-1 REV. D

SCALE — SHEET 2 OF 10 DIST

DEC FORM NO. DRD 138

"THIS DRAWING AND SPECIFICATIONS, HEREIN, ARE THE PROPERTY OF DIGITAL EQUIPMENT CORPORATION AND SHALL NOT BE REPRODUCED OR COPIED OR USED IN WHOLE OR IN PART AS THE BASIS FOR THE MANUFACTURE OR SALE OF ITEMS WITHOUT WRITTEN PERMISSION. COPYRIGHT © 1975 DIGITAL EQUIPMENT CORPORATION"

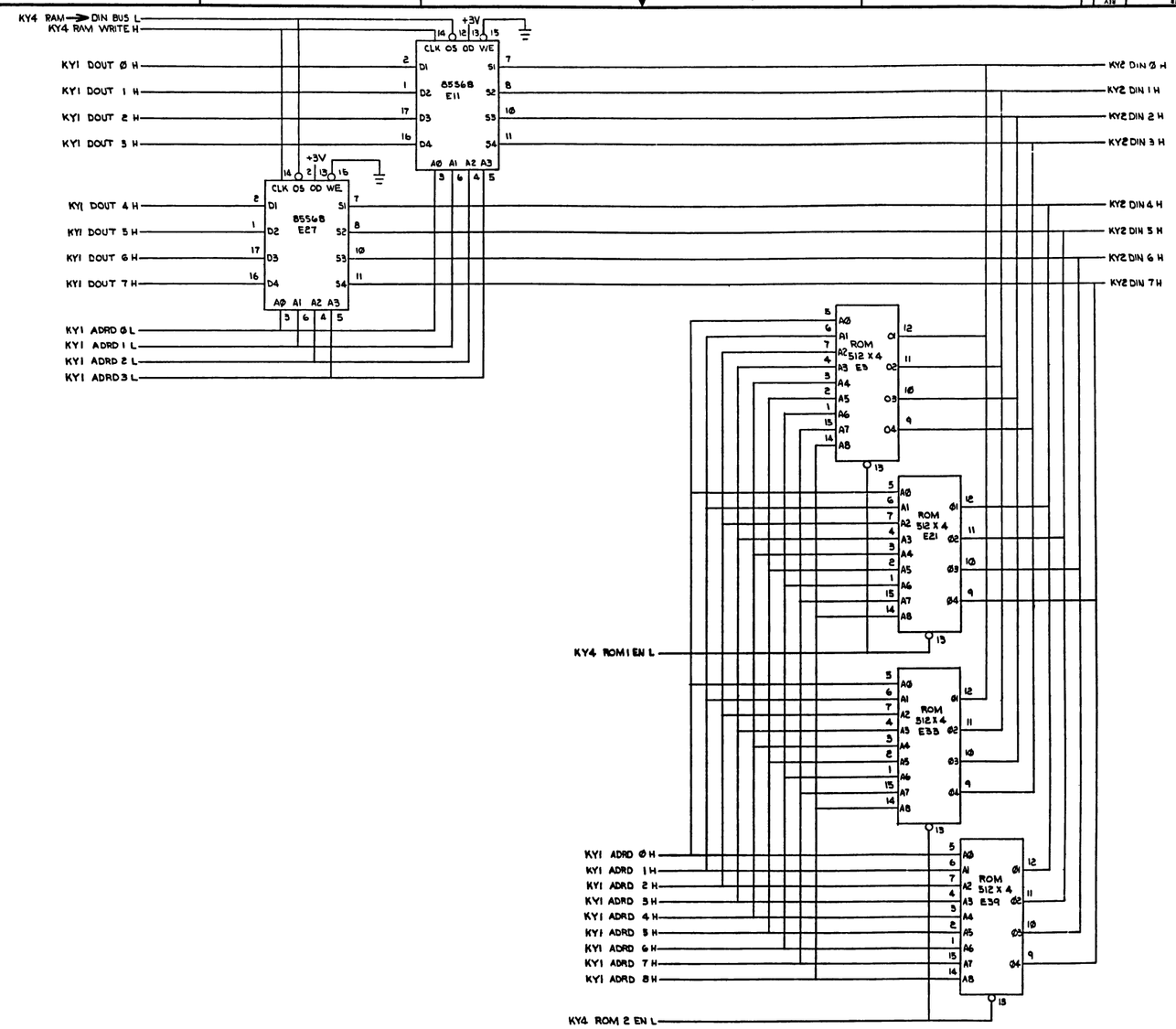

REVISIONS		
CHK	CHANGE NO	REV

TITLE	SIZE	CODE	NUMBER	REV.
INTERFACE (KY-2) PROGRAMMER'S CONSOLE	D	CS	M7859-Ø-1	D

SCALE — SHEET 3 OF 1Ø DIST

DEC FORM NO DRD 128

"THIS DRAWING AND SPECIFICATIONS, HEREIN, ARE THE PROPERTY OF DIGITAL EQUIPMENT CORPORATION AND SHALL NOT BE REPRODUCED OR COPIED OR USED IN WHOLE OR IN PART AS THE BASIS FOR THE MANUFACTURE OR SALE OF ITEMS WITHOUT WRITTEN PERMISSION. COPYRIGHT © 1977 DIGITAL EQUIPMENT CORPORATION"

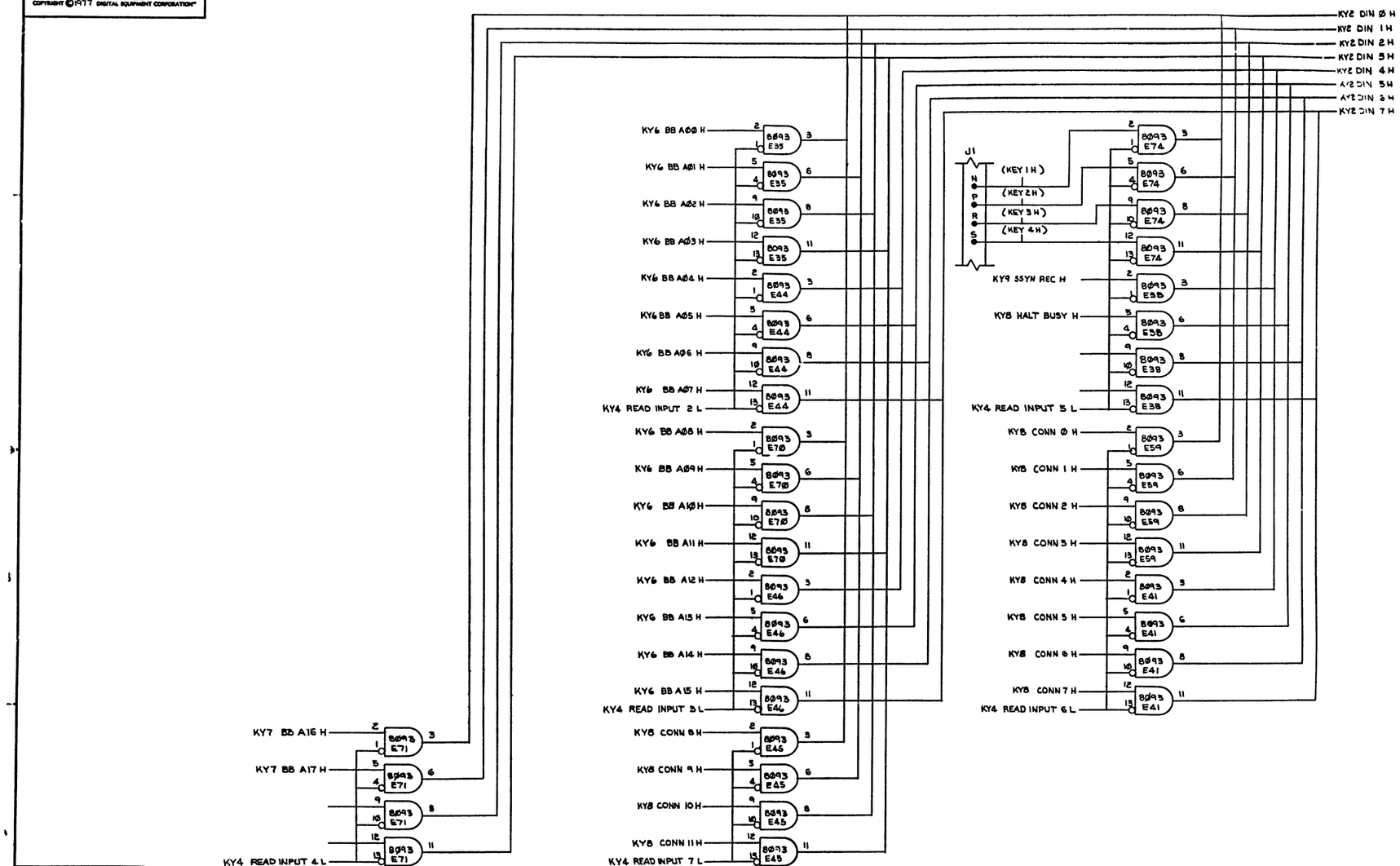

REVISIONS		
CHK	CHANGE NO	REV

TITLE INTERFACE (KY-3) PROGRAMMER'S CONSOLE

SIZE D | CODE CS | NUMBER M7859-Ø-1 | REV. D

SCALE — | SHEET 4 OF 1Ø | DIST.

DEC FORM NO. DRD 138

"THIS DRAWING AND SPECIFICATIONS, HEREIN, ARE THE PROPERTY OF DIGITAL EQUIPMENT CORPORATION AND SHALL NOT BE REPRODUCED OR COPIED OR USED IN WHOLE OR IN PART AS THE BASIS FOR THE MANUFACTURE OR SALE OF ITEMS WITHOUT WRITTEN PERMISSION. COPYRIGHT © 1975 DIGITAL EQUIPMENT CORPORATION"

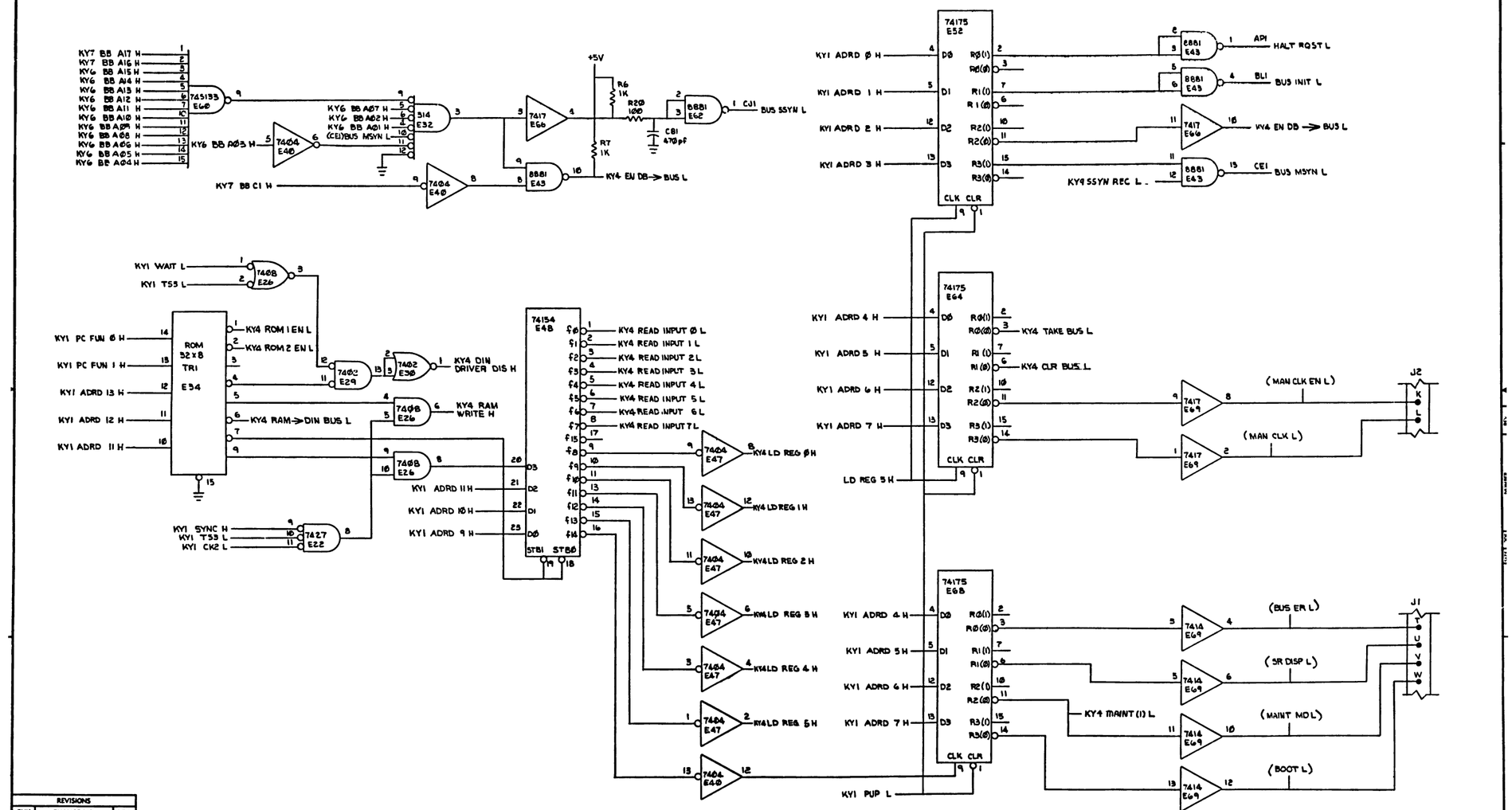

REVISIONS		
CHK	CHANGE NO	REV

TITLE INTERFACE (KY-4) PROGRAMMER'S CONSOLE

SIZE D CODE CS NUMBER M7859-0-1 REV. D

SCALE — SHEET 5 OF 10 DIST

DEC FORM NO. DRD 330

"THIS DRAWING AND SPECIFICATIONS, HEREIN, ARE THE PROPERTY OF DIGITAL EQUIPMENT CORPORATION AND SHALL NOT BE REPRODUCED OR COPIED OR USED IN WHOLE OR IN PART AS THE BASIS FOR THE MANUFACTURE OR SALE OF ITEMS WITHOUT WRITTEN PERMISSION. COPYRIGHT © 1975 DIGITAL EQUIPMENT CORPORATION"

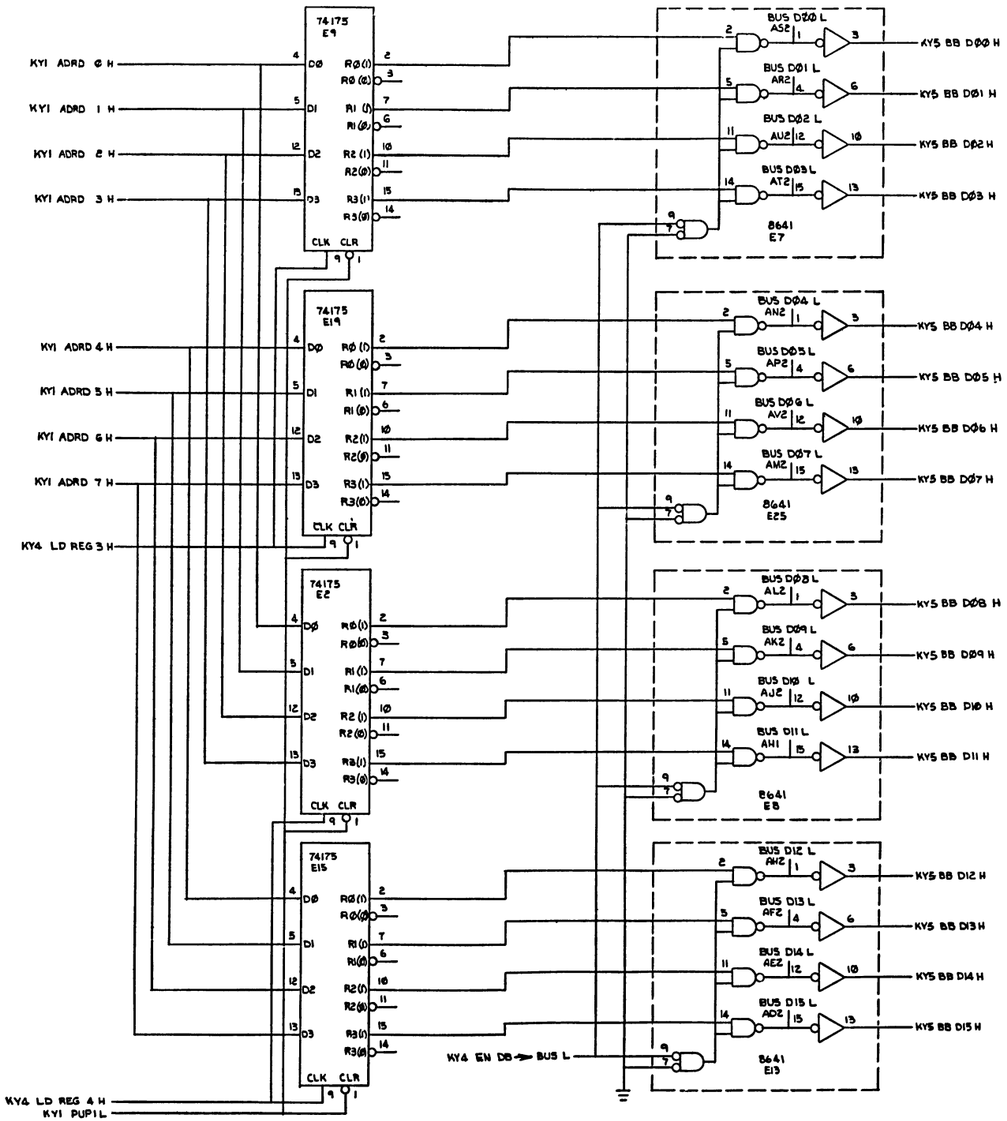

REVISIONS		
CHK	CHANGE NO	REV

TITLE	SIZE	CODE	NUMBER	REV.
INTERFACE (KY-5) PROGRAMMER'S CONSOLE	D	CS	M7859-Ø-1	D
SCALE	SHEET 6 OF 1Ø	DIST		

DEC FORM NO. DRD 138

"THIS DRAWING AND SPECIFICATIONS, HEREIN, ARE THE PROPERTY OF DIGITAL EQUIPMENT CORPORATION AND SHALL NOT BE REPRODUCED OR COPIED OR USED IN WHOLE OR IN PART AS THE BASIS FOR THE MANUFACTURE OR SALE OF ITEMS WITHOUT WRITTEN PERMISSION. COPYRIGHT © 1975, DIGITAL EQUIPMENT CORPORATION"

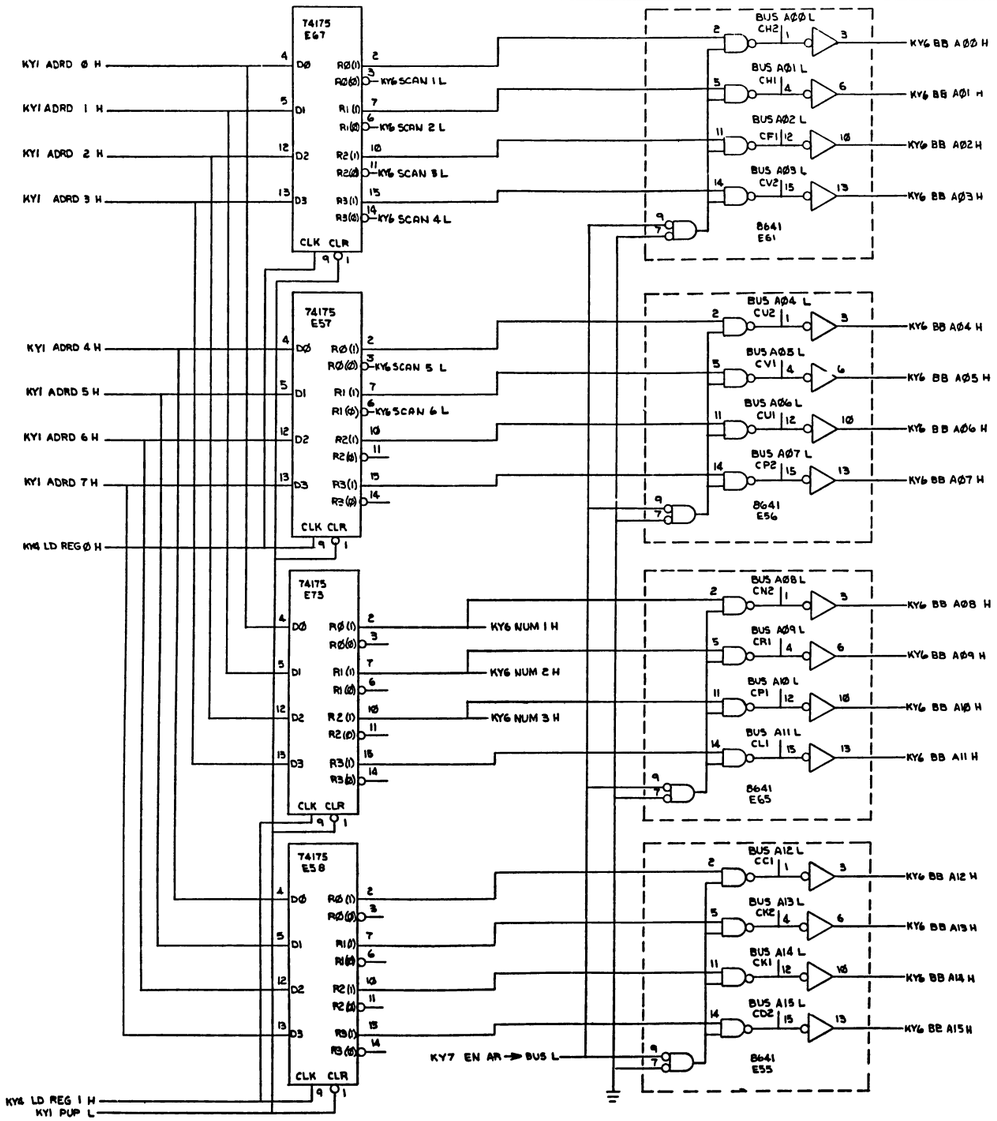

REVISIONS		
CHK	CHANGE NO	REV

TITLE	SIZE	CODE	NUMBER	REV.
INTERFACE (KY-6) PROGRAMMER'S CONSOLE	D	CS	M7859-Ø-1	D

SCALE — SHEET 7 OF 1Ø DIST

DEC FORM NO. DRD 138

"THIS DRAWING AND SPECIFICATIONS, HEREIN, ARE THE PROPERTY OF DIGITAL EQUIPMENT CORPORATION AND SHALL NOT BE REPRODUCED OR COPIED OR USED IN WHOLE OR IN PART AS THE BASIS FOR THE MANUFACTURE OR SALE OF ITEMS WITHOUT WRITTEN PERMISSION. COPYRIGHT © 1975 DIGITAL EQUIPMENT CORPORATION"

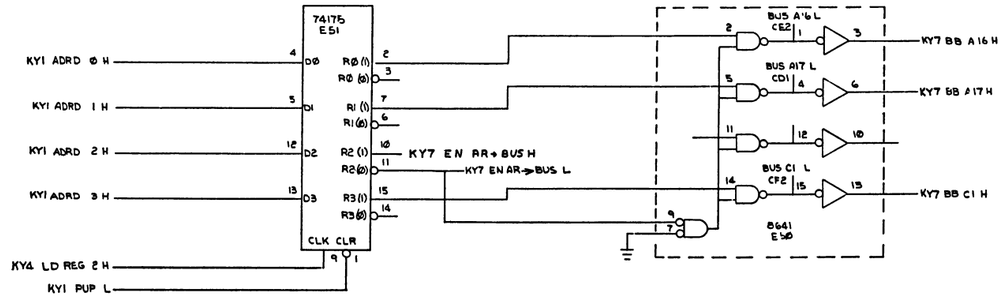

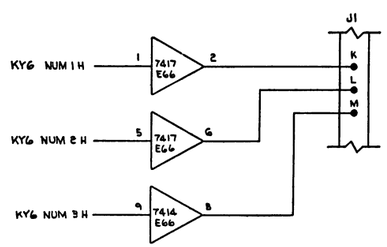

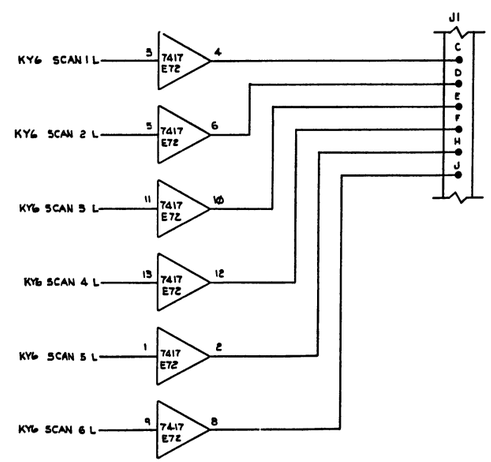

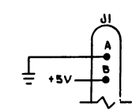

REVISIONS		
CHK	CHANGE NO	REV

TITLE INTERFACE (KY-7) PROGRAMMER'S CONSOLE

SCALE — SHEET 8 OF 10

SIZE D CODE CS NUMBER M7859-Ø-1 REV. D

DIST

DEC FORM NO. DRD 130

"THIS DRAWING AND SPECIFICATIONS, HEREIN, ARE THE PROPERTY OF DIGITAL EQUIPMENT CORPORATION AND SHALL NOT BE REPRODUCED OR COPIED OR USED IN WHOLE OR IN PART AS THE BASIS FOR THE MANUFACTURE OR SALE OF ITEMS WITHOUT WRITTEN PERMISSION. COPYRIGHT © 1975 DIGITAL EQUIPMENT CORPORATION"

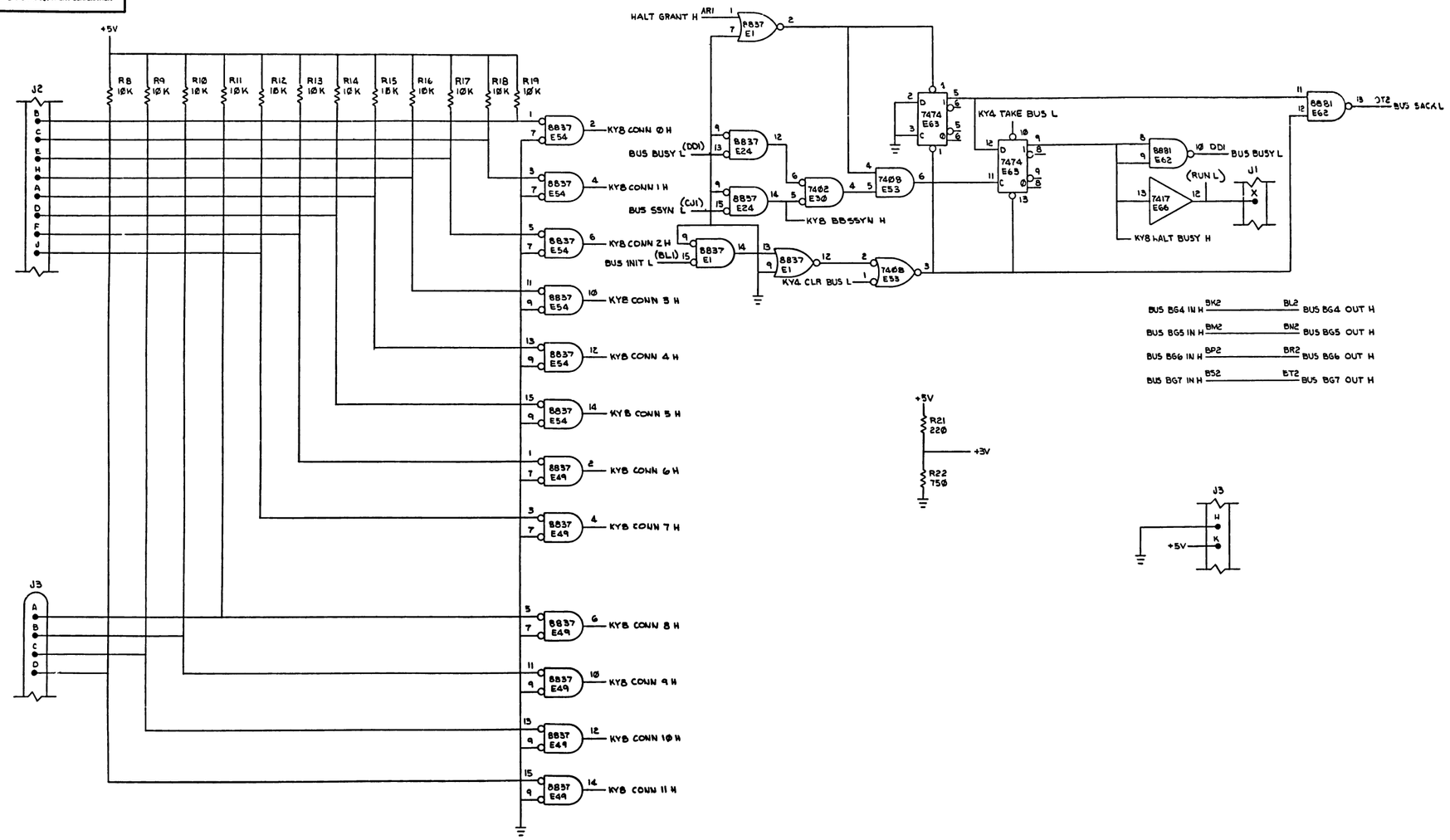

REVISIONS		
CHK	CHANGE NO	REV

TITLE	SIZE	CODE	NUMBER	REV.
INTERFACE (KY-8) PROGRAMMER'S CONSOLE	D	CS	M7859-0-1	D

SCALE — SHEET 9 OF 10 DIST

DEC FORM NO. DRD 128

"THIS DRAWING AND SPECIFICATIONS, HEREIN, ARE THE PROPERTY OF DIGITAL EQUIPMENT CORPORATION AND SHALL NOT BE REPRODUCED OR COPIED OR USED IN WHOLE OR IN PART AS THE BASIS FOR THE MANUFACTURE OR SALE OF ITEMS WITHOUT WRITTEN PERMISSION.
COPYRIGHT © 1977 DIGITAL EQUIPMENT CORPORATION"

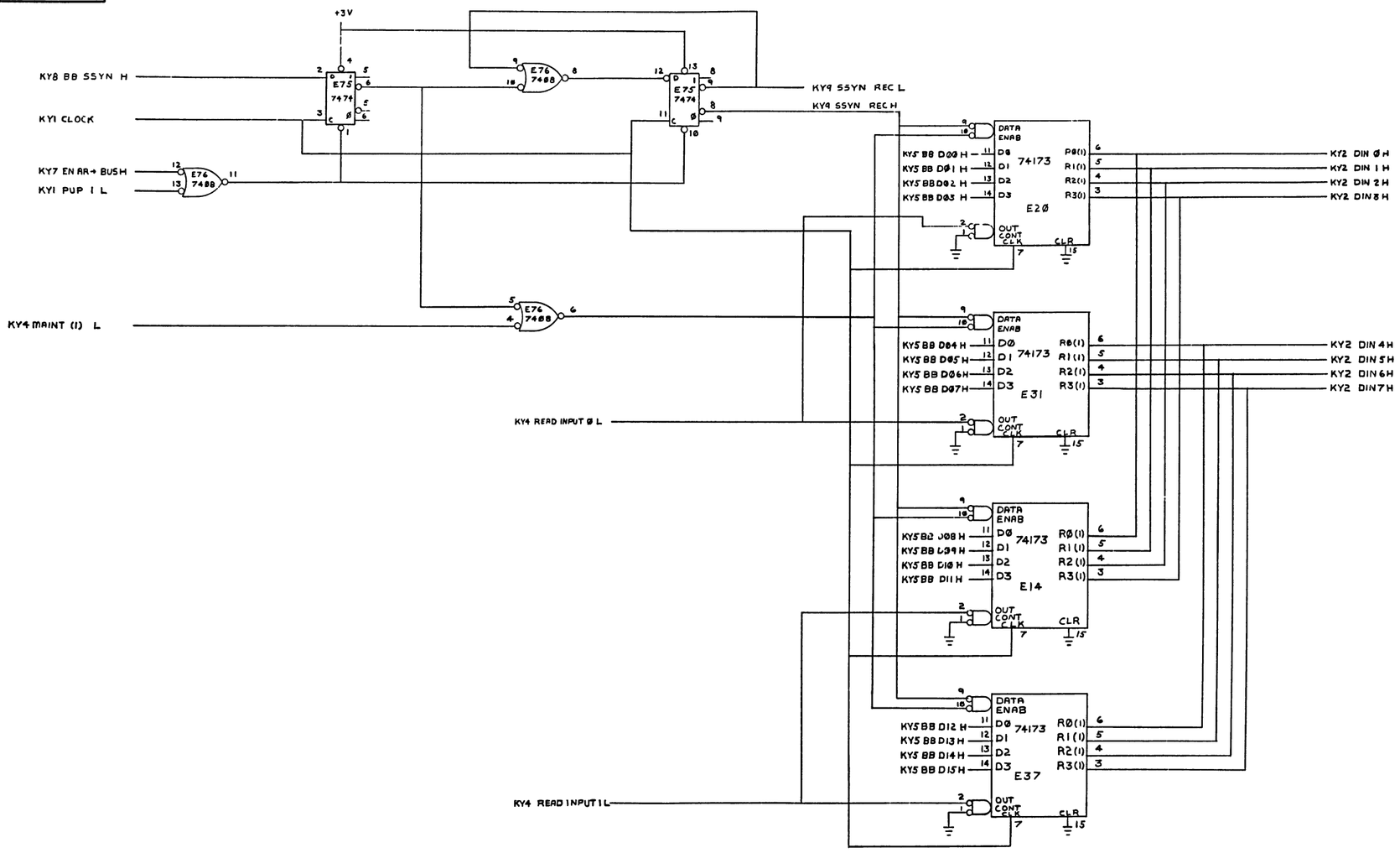

REVISIONS		
CHK	CHANGE NO	REV

TITLE	SIZE	CODE	NUMBER	REV.
INTERFACE, (KY-1) PROGRAMMER'S CONSOLE	D	CS	M7859-Ø-1	D
SCALE ——	SHEET 10 OF 10		DIST	

digital EQUIPMENT CORPORATION MAYNARD MASSACHUSETTS

DRAWING DIRECTORY

"THIS DRAWING AND SPECIFICATIONS, HEREIN, ARE THE PROPERTY OF DIGITAL EQUIPMENT CORPORATION AND SHALL NOT BE REPRODUCED OR COPIED OR USED IN WHOLE OR IN PART AS THE BASIS FOR THE MANUFACTURE OR SALE OF ITEMS WITHOUT WRITTEN PERMISSION. COPYRIGHT © 1975 , DIGITAL EQUIPMENT CORPORATION"

~~CUSTOMER PRINT SET INDEX~~

~~THIS IS PRINT SET~~

SEQUENCE

SEQUENCE

NOTE:
FOR FIELD MAINTENANCE
PRINT SET REFER TO
B-TC-KY11-LB-1

UNIT VARIATIONS		PRINT SET
VAR	TITLE	
KY11-LB	PROGRAMMERS CONSOLE	

REVISIONS		
DATE	CHG. NO	REV
5-76	KY11-LB-1	A
12-76	KY11-LB-2	B
5-77	KY11-LB-3	C
8-78	KY11-LB-4	D

USED ON OPTION/MODEL	
11/34	

SHEET 1 OF 2

DRN. D. HEALY	DATE 11/5/75	TITLE DRAWING DIREC' RY KY11-LB
CHK'D. D. HEALY	DATE 11/6/75	
PROJ ENG. R B PRATT	DATE 12-11-75	
PROD. K Mac Donald	DATE 12-12-75	SIZE B / CODE DD / NUMBER KY11-LB / REV D
~~FIELD SERV.~~	DATE	DIST

EN-01062-1A-16-R972-(325)

DRB 106

ELECTRICAL (SECTION 1)

CUSTOMER PRINT SET	MFG	FIND NO.	DRAWING NO.	REV	NO OF SHT	DESCRIPTION	OPTION NO	FILE DATE
		1	D-UA-KY11-LB-Ø		1	CONSOLE ASSY PROGRAMMERS		
		3	D-CS-5411800-0-1		2	CIRCUIT ETCH BOARD KY11-LB		
		4	D-CS-M7859-Ø-1		1	INTERFACE PROGRAMMERS CONSOLE		

MECHANICAL (SECTION 2)

CUSTOMER PRINT SET	MFG	FIND NO.	DRAWING NO.	REV	NO OF SHT	DESCRIPTION	OPTION NO	FILE DATE
		1	D-UA-KY11-LB-Ø		1	CONSOLE ASSY PROGRAMMERS		
			D-IA-7415048-0-0		1	SUPPORT, PANEL		
			D-IA-7012214-0-0		1	CABLE, CONSOLE TO M7859		
			C-IA-7011411-0-0		1	CABLE, CONS. TO BACK PLANE		
			C-MD-7419008-0-0		1	BRACE SUPPORT PANEL		
		2	D-IA-7415047-0-0		1	PANEL, PROGRAM		
			C-SS-7415047-0-1		1	SILK SCREEN LIGHT GRAY		
			C-SS-7415047-0-2		1	SILK SCREEN DARK GRAY		
		3	D-CS-5411800-0-1		2	CIRCUIT ETCH BOARD KY11-LB		
			K-CO-5411800-0-4			X-Y COORDINATE HOLE LOCATION		
			D-AH-5411800-0-5			ASSY/DRILLING HOLE LAYOUT		
			B-MH-5411800-0-6			MODULE ECO HISTORY		
			5011799		REF	ETCH CIRCUIT BOARD		
			C-IA-7415272-0-0		1	BRKT., SWITCH MTG		
		4	D-CS-M7859-Ø-1		1	INTERFACE PROGRAMMERS CONSOLE		
			K-CO-M7859-Ø-4			X-Y COORDINATE HOLE LOCATION		
			D-AH-M7859-Ø-5			ASSY/DRILLING HOLE LAYOUT		
			B-MH-M7859-Ø-6			MODULE ECO HISTORY		
			5011756		REF	ETCH CIRCUIT BOARD		

CUSTOMER PRINT SET CODES
X = PRINT OF DOCUMENT INCLUDED IN PRINT SET
C = INCLUDES ALL PRINTS INDICATED ON DOCUMENT
S = CONFIDENTIAL AUTHORIZED SIGNATURE REQUIRED

TITLE		SIZE	CODE	NUMBER	REV
DRAWING DIRECTORY KY11-LB	SHEET 2 OF 2	B	DD	KY11-LB	D

DRB 108

digital EN-01062-2B-16-R972-(325)

"THE MATERIAL HEREIN IS FOR INFORMATION PURPOSES ONLY AND IS SUBJECT TO CHANGE WITHOUT NOTICE. DIGITAL EQUIPMENT CORPORATION ASSUMES NO RESPONSIBILITY FOR ANY ERRORS WHICH MAY APPEAR HEREIN."

FIELD MAINTENANCE PRINT SET

"THIS DRAWING AND SPECIFICATIONS, HEREIN, ARE THE PROPERTY OF DIGITAL EQUIPMENT CORPORATION AND SHALL NOT BE REPRODUCED OR COPIED OR USED IN WHOLE OR IN PART AS THE BASIS FOR THE MANUFACTURE OR SALE OF ITEMS WITHOUT WRITTEN PERMISSION. COPYRIGHT © 1976, DIGITAL EQUIPMENT CORPORATION."

TABLE OF CONTENTS

FIELD MAINTENANCE PRINT SET DL11-W	B-TC-DL11-W-1
SERIAL LINE/LINE CLOCK	A-PL-DL11-W-Ø
SLU/RTC OPTION	D-CS-M7856-Ø-1
SLU/RTC OPTION	K-CS-M7856-Ø-9
CABLE ASSY (KL8-E)	D-IA-7008360-0-0
CABLE MODEM BCØ5C	D-UA-BCØ5C-Ø-Ø
CABLE ASSY	D-UA-BC03L-0-0
INSTALLATION PROCEDURE	A-SP-DL11-W-2

UNIT VARIATIONS COVERED BY THIS PRINT SET
DL11-W
DL11-WA
DL11-WB
DL11-WC

DL11-W

Field Maintenance Print Set

Digital Equipment Corporation

PRINT SET ORDER NO.
MPØØ1Ø6

REVISIONS		
REV.	A	B
CHG. NO.	DL11W - 1	DL11-W-2
DATE	NOV-76	8-77

EN-01124 18-NOV-78 (327)

USED ON OPTION/MODEL

SHEET I OF 1

DRN.	D. Healy	DATE 26 MAR 76
CHK'D	D. Healy	DATE 26 MAR 76
PROJ. ENG.	R B Pratt	DATE 29-MAR 1976
FIELD SERV.	G M Evans	DATE 14-April 1976

digital

TITLE: FIELD MAINTENANCE PRINT SET DL11-W

SIZE	CODE	NUMBER	REV.
B	TC	DL11-W-1	B

DIST.

DRB 124

BLANK

DIGITAL EQUIPMENT CORPORATION
MAYNARD, MASSACHUSETTS

PARTS LIST

MADE BY	D. HEALY	CHECKED	D. HEALY	SECTION	1
DATE	25 MAR 76	DATE	25 MAR 76		
ENG	R.E. BRATT	PROD	K. MACDONALD	ISSUED SECT.	1
DATE	1 APR 76	DATE	7-APR-76		

ITEM NO.	DWG NO./PART NO.	DESCRIPTION	QUANTITY/VARIATION DL11-W	DL11-WA	DL11-WB	DL11-WC
1	D-CS-M7856-Ø=1	SLU/RTC OPTION	1	1	1	1
2	D-1A-7008360-1-0	CABLE ASSY (KL8-E)	-	1	-	-
3	D-UA-BCØ5C-25-0	CABLE MODEM BCØ5C	-	-	1	-
4	D-UA-BC03L-10-0	CABLE ASSY	-	-	-	1
5	2376ØA9 *	BOOTSTRAP ROM	1	1	-	1
6	9906228 *	BOX ROM	1	1	-	1
7	D-CS-H315-0-1	MODEM TEST CONNECTOR (SEE NOTE 3.)	-	-	1	1

* 1. THE ROM AND ROM BOX WILL BE ADDED AT FA+T.

2. THE ROM AND ROM BOX ARE TO BE SHIPPED ONLY IF AN LT33 OPTION IS SHIPPED WITH A UNIBUS 11 SYSTEM.

3. ONE H315 PER PDP-11 SYS. OR ONE PER DL-11/WB OR WC LOOSE PIECE/ADD ON.

TITLE	ASSY NO.	SIZE	CODE	NUMBER	REV.	ECO NO
SERIAL LINE/LINE CLOCK DL11-W	NONE	A	PL	DL11-W-Ø	D	DF 11W MKQ05
	SHEET 1 OF 1	DIST.				

DEC FORM DEC 16-(325)-1031 N870
DRA 110

MK

THIS DRAWING AND SPECIFICATIONS HEREIN ARE THE PROPERTY OF DIGITAL EQUIPMENT CORPORATION AND SHALL NOT BE REPRODUCED OR COPIED OR USED IN WHOLE OR IN PART AS THE BASIS FOR THE MANUFACTURE OR SALE OF ITEMS WITHOUT WRITTEN PERMISSION
COPYRIGHT © 1978 DIGITAL EQUIPMENT CORPORATION"

NOTES:

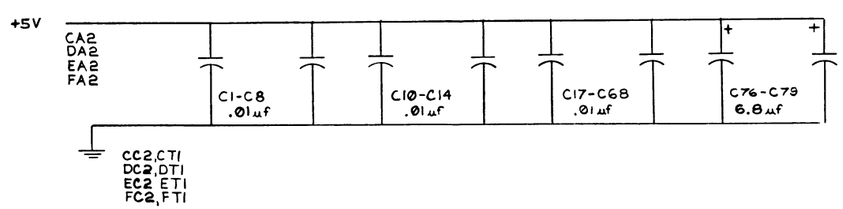

IC TYPE	GND	+5V
IC 8641	8	16
IC 8-84	1	8
IC 88-7	8	16
IC 8-14A	1	8
IC 7412	8	16
IC 74157	8	16
IC 74153	8	16
IC 749-	10	5
IC 7492	10	5
IC 74151	8	16
IC 74175	8	16
IC UART	1	3
IC 8097	8	16

GND AND 5V ARE USUALLY PIN 7 AND 14 RESPECTIVELY EXCEPTIONS ARE STATED ABOVE

IC PIN LOCATIONS

REV	CHANGE NO.	CHK
H	M7856 — 00004	B. CRAMM 2/27/78

REVISIONS

DEC NO.	EIA NO.	DEC NO.	EIA NO.

SEMICONDUCTOR CONVERSION CHART

FIRST USED ON OPTION MODEL

QTY	REF. DESIGNATION	DESCRIPTION	PART NO.	ITEM NO.

PARTS LIST

ETCH BOARD REV. E

DRN. D Dingeldein	DATE 2/23/78	
CHK'D.	DATE 3-8-78	
ENG.	DATE 3-9-78	
PROJ. ENG.	DATE 3-9-78	
PROD.	DATE 3-9-78	

NEXT HIGHER ASSY

SCALE

SHEET 1 OF 8

digital

TITLE SLU/RTC OPTION

SIZE	CODE	NUMBER	REV.
D	CS	M7856-0-1	H

DIST.

SIZE D CODE CS NUMBER M7856-0-1 REV. H

"THIS DRAWING AND SPECIFICATIONS, HEREIN, ARE THE PROPERTY OF DIGITAL EQUIPMENT CORPORATION AND SHALL NOT BE REPRODUCED OR COPIED OR USED IN WHOLE OR IN PART AS THE BASIS FOR THE MANUFACTURE OR SALE OF ITEMS WITHOUT WRITTEN PERMISSION
COPYRIGHT © 1978 DIGITAL EQUIPMENT CORPORATION"

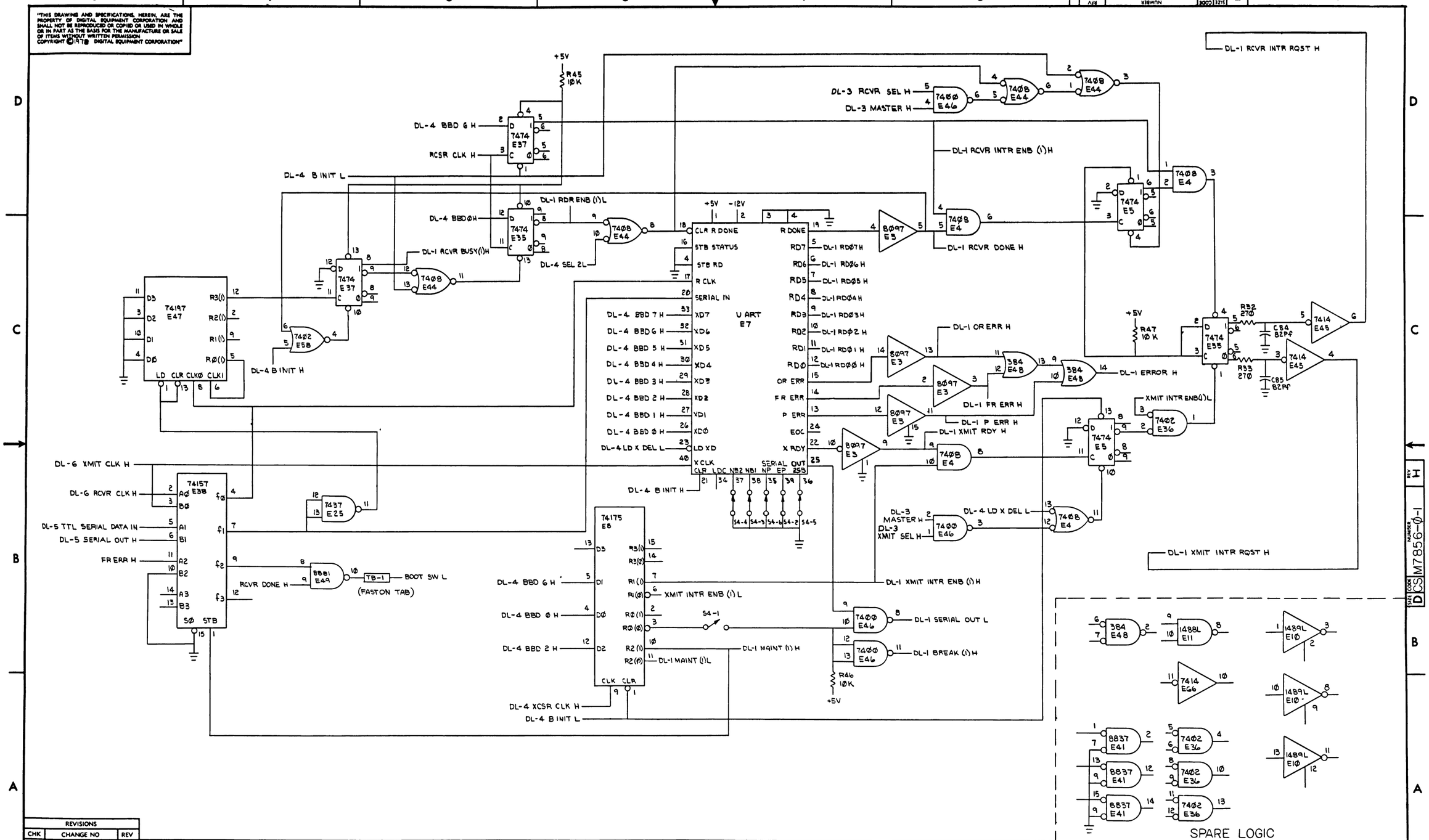

REVISIONS		
CHK	CHANGE NO	REV

TITLE	SIZE	CODE	NUMBER	REV.
SLU/RTC OPTION (DL-1)	D	CS	M7856-Ø-1	H
SCALE —	SHEET 2 OF 8	DIST.		

DEC FORM NO DRD 138

"THIS DRAWING AND SPECIFICATIONS HEREIN ARE THE PROPERTY OF DIGITAL EQUIPMENT CORPORATION AND SHALL NOT BE REPRODUCED OR COPIED OR USED IN WHOLE OR IN PART AS THE BASIS FOR THE MANUFACTURE OR SALE OF ITEMS WITHOUT WRITTEN PERMISSION
COPYRIGHT © 1978 DIGITAL EQUIPMENT CORPORATION"

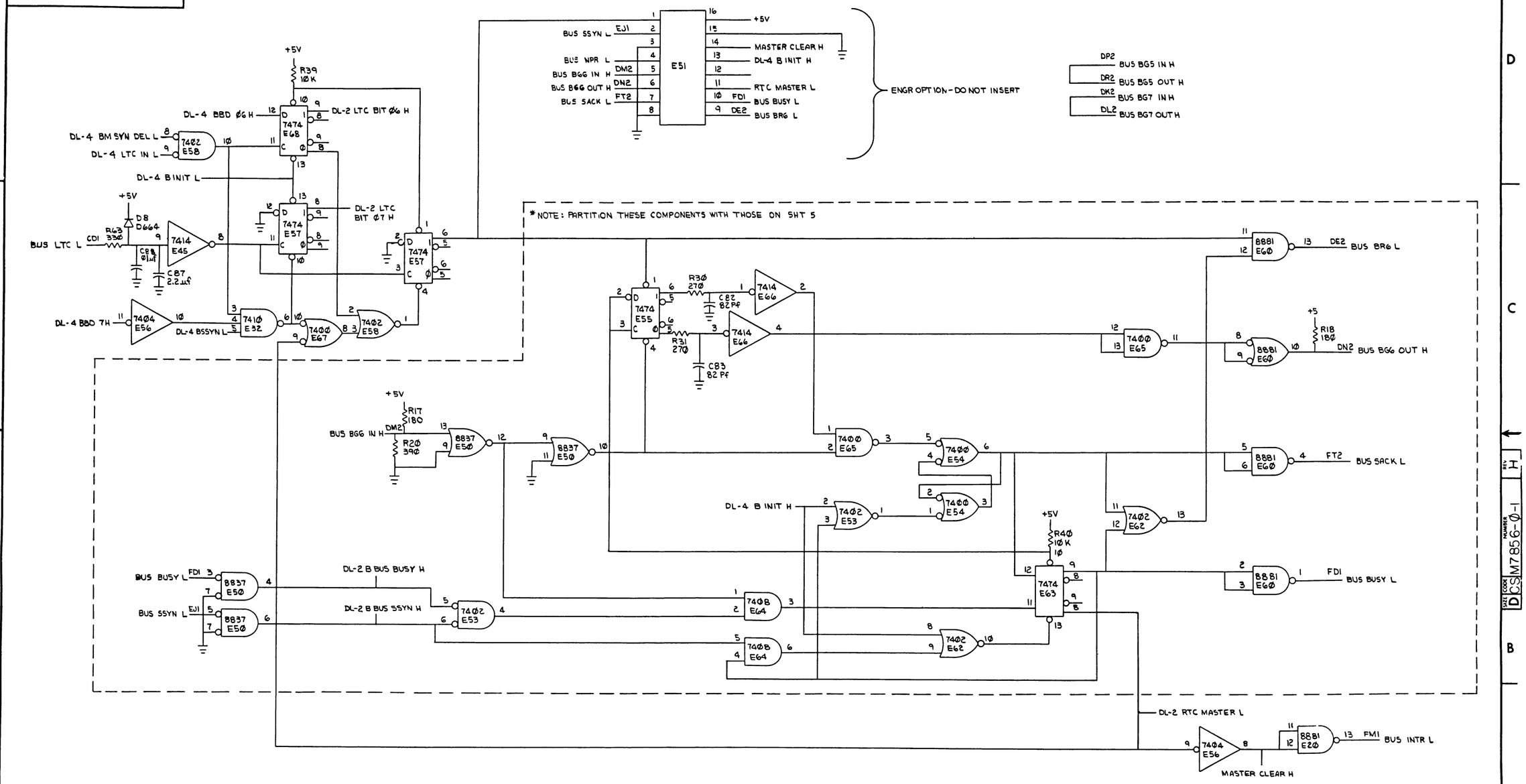

REVISIONS		
CHK	CHANGE NO	REV

TITLE	SIZE	CODE	NUMBER	REV.
SLU/RTC OPTION (DL-2)	D	CS	M7856-Ø-1	H
SCALE — / —	SHEET 3 OF 8	DIST		

DEC FORM NO ORD 138

"THIS DRAWING AND SPECIFICATIONS, HEREIN ARE THE PROPERTY OF DIGITAL EQUIPMENT CORPORATION AND SHALL NOT BE REPRODUCED OR COPIED OR USED IN WHOLE OR IN PART AS THE BASIS FOR THE MANUFACTURE OR SALE OF ITEMS WITHOUT WRITTEN PERMISSION COPYRIGHT © 1971 DIGITAL EQUIPMENT CORPORATION"

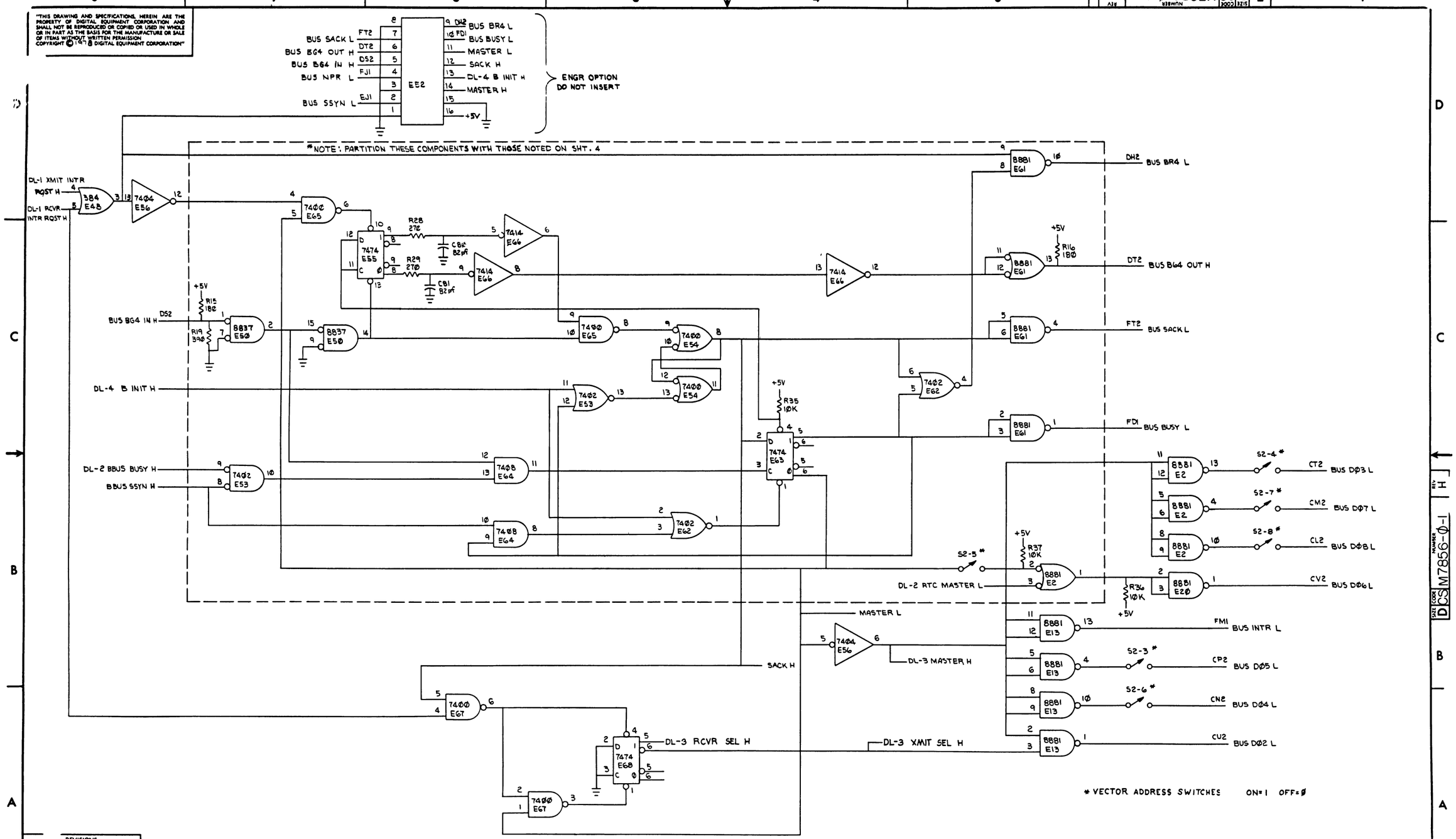

REVISIONS		
CHK	CHANGE NO	REV

TITLE	SIZE	CODE	NUMBER	REV.
SLU/RTC OPTION (DL-3)	D	CS	M7856-Ø-1	H
SCALE —	SHEET 4 OF 8	DIST.		

DEC FORM NO DRD 138

"THIS DRAWING AND SPECIFICATIONS, HEREIN, ARE THE PROPERTY OF DIGITAL EQUIPMENT CORPORATION AND SHALL NOT BE REPRODUCED OR COPIED OR USED IN WHOLE OR IN PART AS THE BASIS FOR THE MANUFACTURE OR SALE OF ITEMS WITHOUT WRITTEN PERMISSION
COPYRIGHT © 1978 DIGITAL EQUIPMENT CORPORATION"

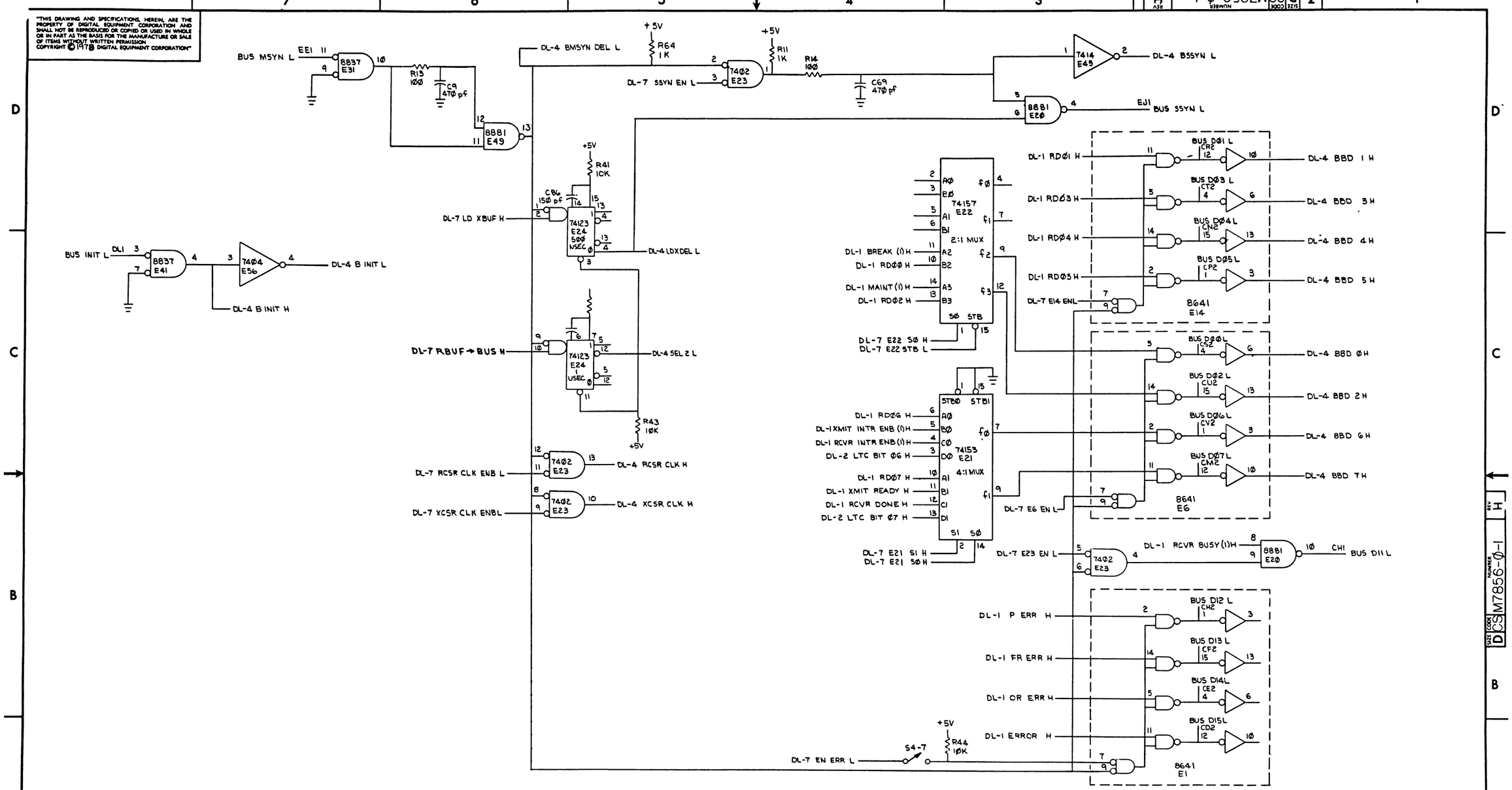

REVISIONS		
CHK	CHANGE NO	REV

TITLE	SIZE	CODE	NUMBER	REV.
SLU/RTC OPTION (DL-4)	D	CS	M7856-0-1	H
SCALE —	SHEET 5 OF 8	DIST.		

DEC FORM NO 0101 1 5R

"THIS DRAWING AND SPECIFICATIONS, HEREIN ARE THE PROPERTY OF DIGITAL EQUIPMENT CORPORATION AND SHALL NOT BE REPRODUCED OR COPIED OR USED IN WHOLE OR IN PART AS THE BASIS FOR THE MANUFACTURE OR SALE OF ITEMS WITHOUT WRITTEN PERMISSION
COPYRIGHT © 1978 DIGITAL EQUIPMENT CORPORATION"

NOTE:
1. SWITCHES ARE SHOWN IN ACTIVE MODE.
2. D7, D6 ARE MCL13Ø1 1 MA CONSTANT CURRENT DIODES.

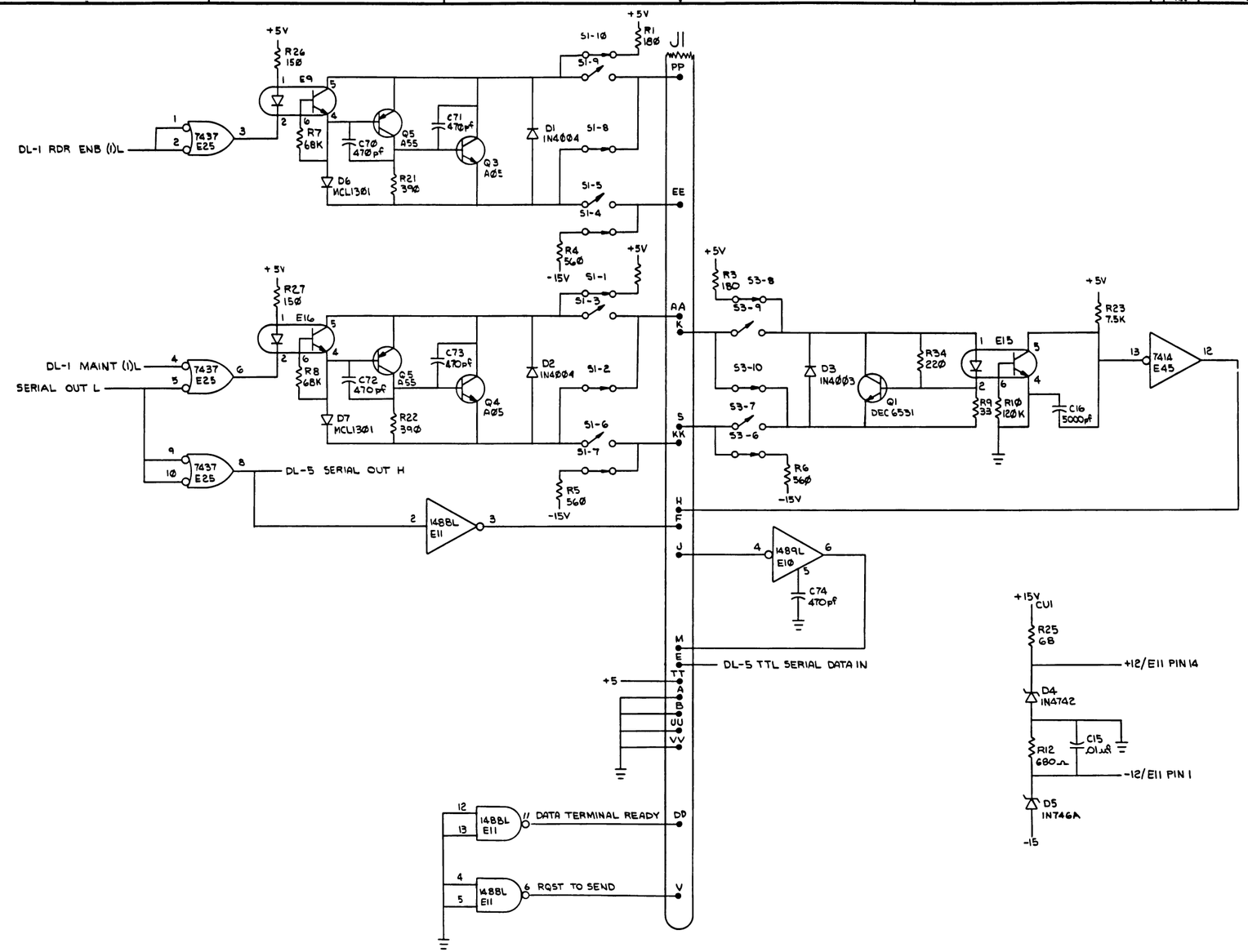

REVISIONS		
CHK	CHANGE NO	REV

TITLE: SLU/RTC OPTION (DL-5)
SIZE: D CODE: CS NUMBER: M7856-Ø-1 REV: H
SCALE: — SHEET 6 OF 8 DIST.

DEC FORM NO DRD 138

"THIS DRAWING AND SPECIFICATIONS, HEREIN, ARE THE PROPERTY OF DIGITAL EQUIPMENT CORPORATION AND SHALL NOT BE REPRODUCED OR COPIED OR USED IN WHOLE OR IN PART AS THE BASIS FOR THE MANUFACTURE OR SALE OF ITEMS WITHOUT WRITTEN PERMISSION
COPYRIGHT © 1978 DIGITAL EQUIPMENT CORPORATION"

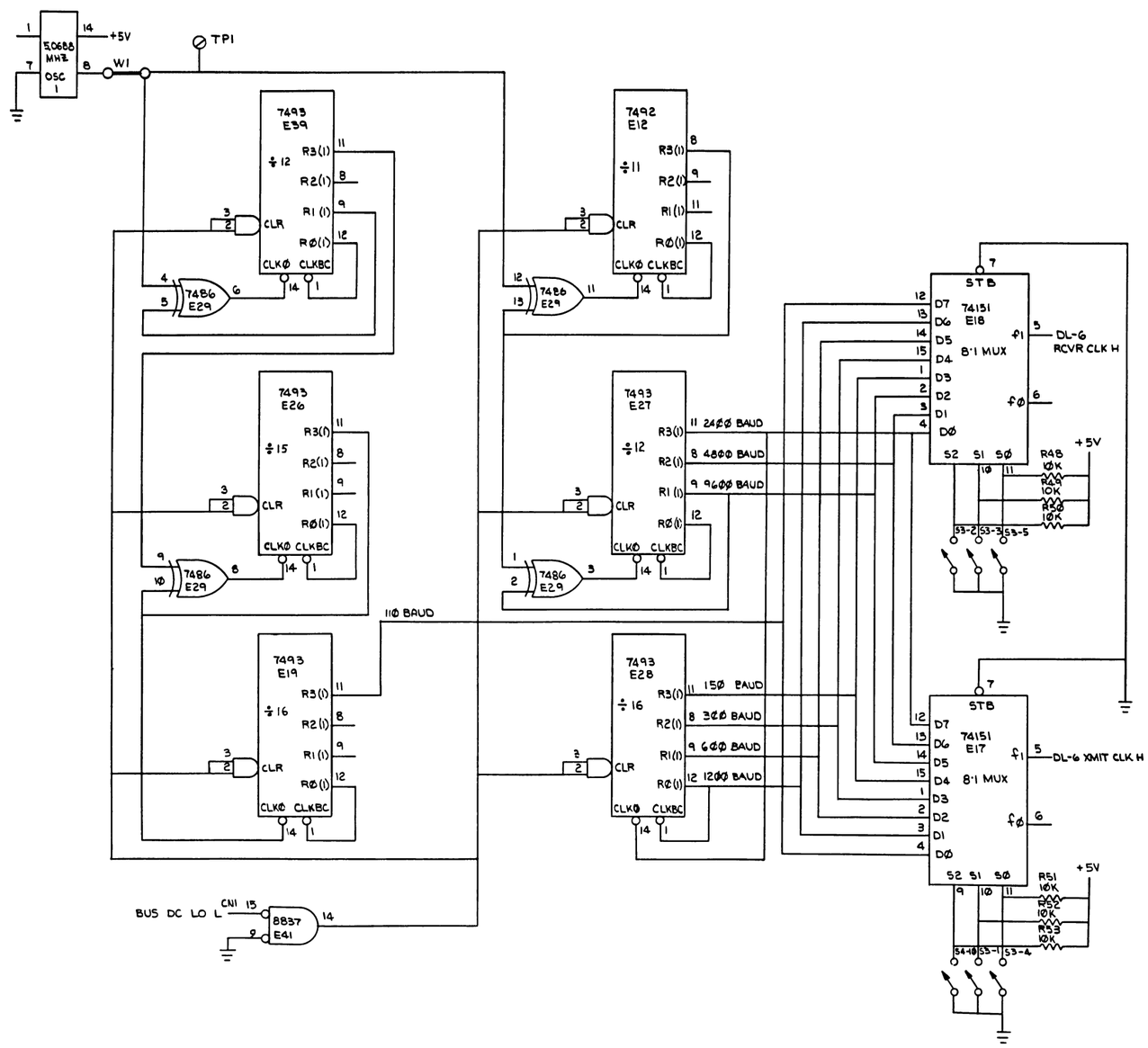

BAUD RATE	RCVR S3-2	RCVR S3-3	RCVR S3-5	XMIT S4-1Ø	XMIT S3-1	XMIT S3-4
11Ø	OFF	OFF	OFF	ON	ON	ON
15Ø	ON	OFF	OFF	OFF	ON	ON
3ØØ	OFF	ON	ON	ON	OFF	OFF
6ØØ	OFF	ON	OFF	ON	OFF	ON
12ØØ	OFF	OFF	ON	ON	ON	OFF
24ØØ	ON	ON	ON	OFF	OFF	OFF
48ØØ	ON	ON	OFF	OFF	OFF	ON
96ØØ	ON	OFF	ON	OFF	ON	OFF

REVISIONS		
CHK	CHANGE NO	REV

TITLE	SIZE	CODE	NUMBER	REV
SLU/RTC OPTION (DL-6)	D	CS	M7856-Ø-1	H
SCALE —	SHEET 7 OF 8	DIST		

DEC FORM NO DRD 138

"THIS DRAWING AND SPECIFICATIONS, HEREIN ARE THE PROPERTY OF DIGITAL EQUIPMENT CORPORATION AND SHALL NOT BE REPRODUCED OR COPIED OR USED IN WHOLE OR IN PART AS THE BASIS FOR THE MANUFACTURE OR SALE OF ITEMS WITHOUT WRITTEN PERMISSION
COPYRIGHT © 1978 DIGITAL EQUIPMENT CORPORATION"

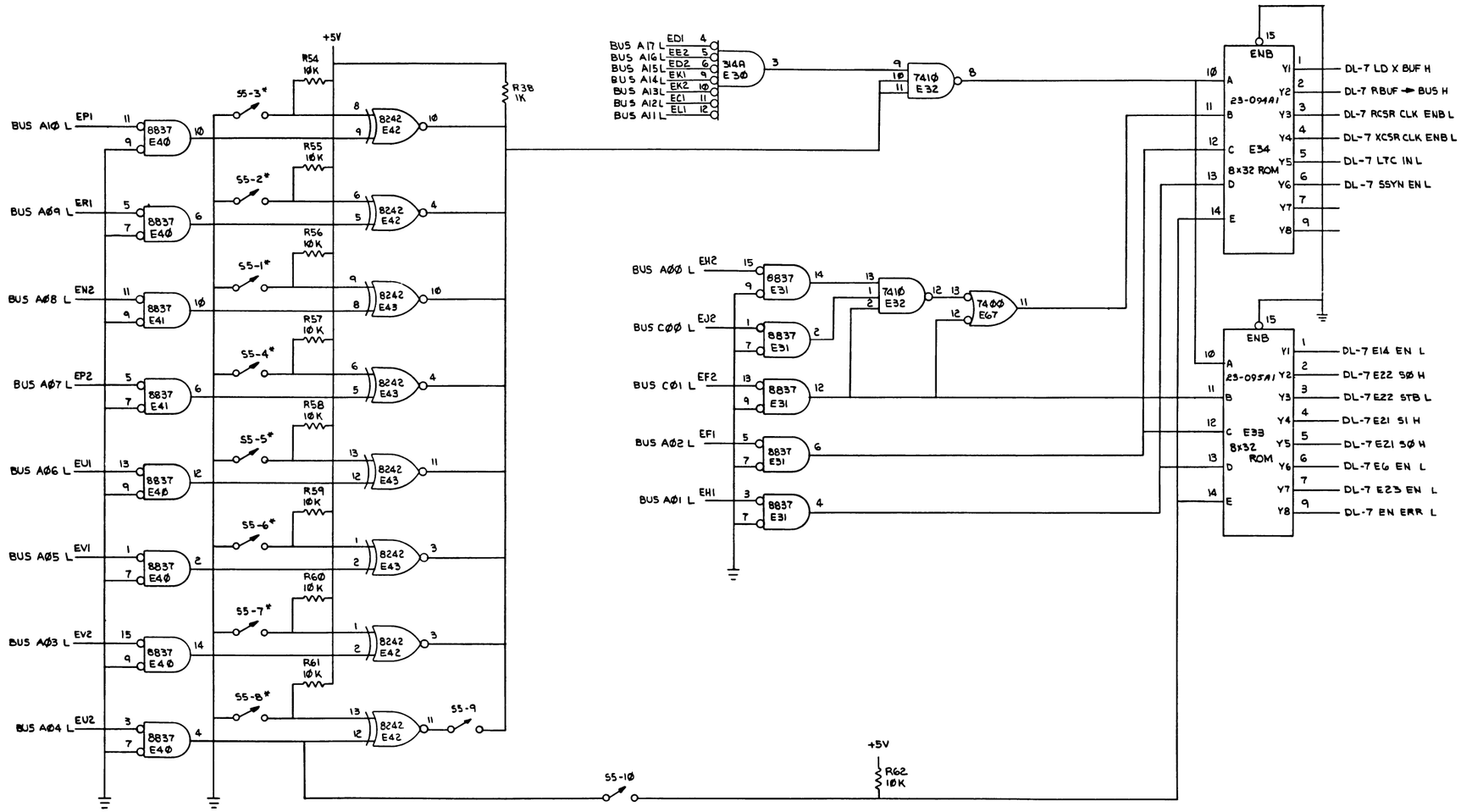

* ADDRESS SELECTION SWITCHES - OFF = 1 ON = 0

REVISIONS		
CHK	CHANGE NO	REV

TITLE	SIZE	CODE	NUMBER	REV.
SLU/RTC OPTION (DL-7)	D	CS	M7856-0-1	H
SCALE — / —	SHEET 8 OF 8	DIST.		

DEC FORM NO FRD 138

"THIS DRAWING AND SPECIFICATIONS, HEREIN, ARE THE PROPERTY OF DIGITAL EQUIPMENT CORPORATION AND SHALL NOT BE REPRODUCED OR COPIED OR USED IN WHOLE OR IN PART AS THE BASIS FOR THE MANUFACTURE OR SALE OF ITEMS WITHOUT WRITTEN PERMISSION.
COPYRIGHT © 1975, DIGITAL EQUIPMENT CORPORATION"

SIZE	CODE	NUMBER	REV.
K	CS	M7856-0-9	

(FOR 23094A1-A07 & 23095A1-A07)

DESCRIPTION	DWG./PART NO.	ITEM NO.

UNLESS OTHERWISE SPECIFIED DIMENSIONS ARE IN INCHES

ANGLES ±0° 30'	CLASS OF ACCURACY (CHECK ONE)	NOMINAL DIMENSION RANGE INCHES					
		OVER 0 TO 0.2	OVER 0.2 TO 1.2	OVER 1.2 TO 4.0	OVER 4.0 TO 12.0	OVER 12.0 TO 40.0	OVER 40.0 TO 80.0
SURFACE QUALITY IN MICROINCHES	MEDIUM ☐	±.004	±.008	±.012	±.016	±.024	±.04
	PREFERRED ☐	±.012	±.016	±.025	±.04	±.063	±0.1

QUANTITY & VARIATION

THIRD ANGLE PROJECTION

REMOVE BURRS AND BREAK SHARP CORNERS

DO NOT SCALE DWG

MATERIAL

FINISH

DRN.		
CHK'D		
ENG.		
PROJ. ENG.		
PROD.		

NEXT HIGHER ASSY. D-CS-M7856-0-1

SCALE

SHEET 1 OF 3

FIRST USED ON DL11-W

digital

TITLE ROM LISTING

SIZE	CODE	NUMBER	REV.
K	CS	M7856-0-9	

DIST.

REVISIONS

CHK	CHANGE NO.	REV.

DEC 16-(325)-1080-1B-R275
DRB 100A

DEC PART NUMB: 23094A1-A07
ORIGINATOR: BOB PRATT
DATE OF ORIGIN: 2/20/75

DECIMAL LOC	OCTAL LOC	BINARY DATA	OCTAL DATA
0	00	00111100	074
1	01	00111100	074
2	02	00111100	074
3	03	00111100	074
4	04	00111100	074
5	05	00111100	074
6	06	00111100	074
7	07	00111100	074
8	10	00111100	074
9	11	00111100	074
10	12	00111100	074
11	13	00111100	074
12	14	00001100	014
13	15	00111100	074
14	16	00011100	034
15	17	00111100	074
16	20	00011000	030
17	21	00111100	074
18	22	00011100	034
19	23	00111100	074
20	24	00010100	024
21	25	00111100	074
22	26	00011100	034
23	27	00111100	074
24	30	00011100	034
25	31	00111100	074
26	32	00011110	036
27	33	00111100	074
28	34	00011101	035
29	35	00111100	074
30	36	00011100	034
31	37	00111100	074

DEC PART NUMB: 23-095A1-A07
ORIGINATOR: BOB PRATT
DATE OF ORIGIN: 2/28/75

DECIMAL LOC	OCTAL LOC	BINARY DATA	OCTAL DATA
0	00	11111111	377
1	01	11111111	377
2	02	11111111	377
3	03	11111111	377
4	04	11111111	377
5	05	11111111	377
6	06	11111111	377
7	07	11111111	377
8	10	11111111	377
9	11	11111111	377
10	12	11111111	377
11	13	11111111	377
12	14	11011111	337
13	15	11111111	377
14	16	11111111	377
15	17	11111111	377
16	20	10001111	217
17	21	11111111	377
18	22	11111111	377
19	23	11111111	377
20	24	11010001	321
21	25	11111111	377
22	26	11111111	377
23	27	11111111	377
24	30	01000010	102
25	31	11111111	377
26	32	11111111	377
27	33	11111111	377
28	34	11111111	377
29	35	11111111	377
30	36	11111111	377
31	37	11111111	377

This drawing and specifications herein are the property of Digital Equipment Corporation and shall not be reproduced or copied or used in whole or in part as the basis for the manufacture or sale of items without written permission

WIRE TABLE

ITEM NO.	DESCRIPTION AWG	COLOR	PAIR NO.	FROM CONNECTION	WITH	TO CONNECTION	WITH
3	22	BLK	1	P1-2	2	P2-KK	5
3		RED		P1-3	2	P2-S	
3,7		SHIELD		SEE NOTE #2	—	P2-A(NOTE #3)	
3		BLK	2	P1-4	2	P2-EE	
3		WHT		P1-5	2	P2-RR	
3,7		SHIELD		SEE NOTE #2	—	P2-UU(NOTE #3)	
3		BLK	3	P1-6	2	P2-PP	
3		GRN		P1-7	2	P2-K	
3,7		SHIELD		SEE NOTE #2	—	P2-VV(NOTE #3)	
6	22	BLK	—	P2-E	5	P2-H	5

LEGEND

VARIATION	LENGTH X	LENGTH Y
7008360-0	25IN±10	27IN±10
7008360-1	46IN±10	48IN±10
7008360-9	9FT±2IN	9FT2IN±2IN

NOTES:

1. * ASTERISKS INDICATE CAVITIES NOT USED OR DESIGNATED BY LETTERS.
2. DRAIN WIRES TO BE CUT BACK TO OUTER INSULATION ON P1 END OF CABLE ONLY. SHIELDS TO BE CUT BACK TO OUTER INSULATION ON BOTH ENDS OF CABLES.
3. DRAIN WIRES ON P2 END OF CABLE TO BE EACH ENCLOSED WITH ITEM #7 (TUBING) FROM END OF CABLE JACKET TO POINT WHERE THEY ENTER P2 CONNECTOR.
4. ITEM #6 (WIRE) TO BE APPROXIMATELY ONE(1) INCH LONG.
5. PLACE ITEM #9 ("THIS SIDE UP" STICKER) ON LETTERED SIDE OF ITEM #4 (BERG HOUSING) AS SHOWN.

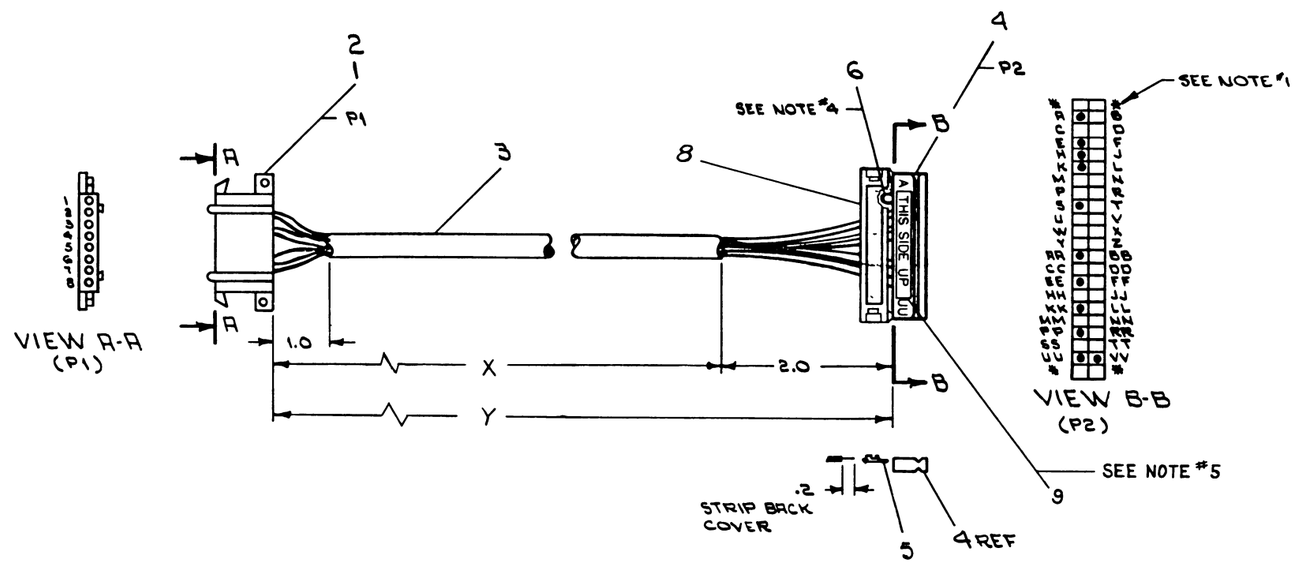

QTY	DESCRIPTION	PART NO	ITEM NO
1	LABEL, THIS SIDE UP	3611567	9
1	STRAIN RELIEF	1211166	8
A/R	TUB. #18 TEF. THINWALL NAT	9107278-11	7
A/R	WIRE, #22 AWG STRD TEF BLK	9107350-00	6
11	SOCKET, CRIMP # 47216	1210089-07	5
1	HOUSING, BERG #65043-015	1210918-15	4
A/R	CABLE, BELDEN #8777-3PR SHLD	9107723-0	3
6	CONTACT MATE-N-LOCK (FEMALE)	1209379-03	2
1	CONN. MATE-N-LOCK (FEMALE)	1209340-00	1

PARTS LIST

REVISIONS CHK	CHANGE NO	REV
	SE-00002	A
	KL8E-00006	B
E. CLARK	7008360-00001	C
E. ALain 10-29-73		
B REGAN	7008360-00002	D
REGAN	7008360-00003	E
	BC05M-30031	F
M.E. LEWANDOWSKI	7008360-00004	H
	7008360-0	
J. MCNAMARA		

FIRST USED ON OPTION/MODEL: PDP-8E

DO NOT SCALE DRAWING
UNLESS OTHERWISE SPECIFIED
DIMENSION IN INCHES
TOLERANCES
ANGLES ± 0°30'
FINAL SURFACE QUALITY
REMOVE BURRS AND BREAK SHARP CORNERS

MATERIAL: SEE PARTS LIST

FINISH

DRN. DATE 7 APR 71
CHK D. DATE 8-8-71
ENG. DATE 4-8-71
PROJ. ENG. DATE 4-8-71
PROD DATE 7/9/71

NEXT HIGHER ASSY: A ML-KL8-E-0

SCALE: NONE

SHEET 1 OF 1

digital EQUIPMENT CORPORATION
MAYNARD MASSACHUSETTS

TITLE: CABLE ASSEMBLY (KL8E)

SIZE D | CODE IA | NUMBER 7008360-0-0 | REV H

DIST.

SIZE D | CODE IA | NUMBER 7008360-0-0 | REV H

This drawing and specifications herein are the property of Digital Equipment Corporation and shall not be reproduced or copied or used in whole or in part as the basis for the manufacture or sale of items without written permission

WIRE TABLE

ITEM NO.	DESCRIPTION AWG	DESCRIPTION COLOR	FROM CONNECTION	FROM WITH	TO CONNECTION	TO WITH
1	26	BLU/WHT	P1-1 *	12	J1-VV	7
↑	↑	WHT/BLU	P1-2	8	J1-F	↑
		ORN/WHT	P1-3	↑	J1-J	
		WHT/ORN	P1-4		J1-V	
		GRN/WHT	P1-5	↑	J1-T	
		WHT/GRN	P1-6	8	J1-Z	
		BRN/WHT	P1-7 **	12	J1-UU	
		WHT/BRN	P1-8	8	J1-BB	
		SLA/WHT	P1-9	↑	J1-Y	
		WHT/SLA	P1-10		J1-W	
		BLU/RED	P1-11		J1-FF	
		RED/BLU	P1-12		J1-JJ	
		ORN/RED	P1-13		J1-D	
↑	↓	SLA/RED	P1-14	↑	J1-LL	↓
1	26	SLA/GRN	P1-15	8	J1-N	7

ITEM NO.	DESCRIPTION AWG	DESCRIPTION COLOR	FROM CONNECTION	FROM WITH	TO CONNECTION	TO WITH
1	26	RED/BRN	P1-16	8	J1-NN	7
↑	↑	SLA	P1-17	↑	J1-R	↑
		RED/SLA	P1-18		J1-U	
		BLU/BLK	P1-19		J1-P	
		BLK/BLU	P1-20		J1-DD	
		ORN/BLK	P1-21		J1-MM	
		BLK/ORN	P1-22		J1-X	
		GRN/BLK	P1-23		J1-RR	
		BRN/RED	P1-24	↓	J1-L	
		RED/ORN	P1-25	8	J1-C	
↑		SHIELD	P1-1 *	12	J1-A	↓
1		SHIELD	P1-7 **	12	J1-B	7
3	↓	BLK	P1-1 #	12	P1-7 **	12
2	26	RED	J1-E	7	J1-M	7

NB
* DENOTES THREE WIRES ARE SOLDERED INTO THE P1-1 SOLDER CUP
** DENOTES THREE WIRES ARE SOLDERED INTO THE P1-7 SOLDER CUP

LEGEND

NUMBER	VARIATION DIM X	VARIATION DIM Y (PRECUT)
BCØ5C-25	25'±3"	25'1.8"
BCØ5C-5Ø	5Ø'±2%	5Ø'1.8"
BCØ5C-Ø9	9'±3"	9'1.8"
BCØ5C-1F	18"±1"	19.8"

NOTES:

1. MANUFACTURING SHOULD USE MACHINE CRIMPER TOOL FOR CRIMPING PINS (ITEM #7) MUST BE HT68 FROM BERG ELECT
2. ONLY DEC PART #1210918-15 MAY BE USED AS J1.
3. PLACE ITEM #9 ("THIS SIDE UP" STICKER) ON LETTERED SIDE OF ITEM #6 (BERG HOUSING) AS SHOWN.
4. ~~USE ITEM #13 (9107302-11) IN TWO PLACES (P1-1, P1-7) TO PREVENT SHORTING~~
5. ~~USE ITEM #12 (9107295-11) ON ALL BEGINNING SOLDER CUPS TO PREVENT SHORTING.~~
6. DUE TO ± TOLERANCES WITH DIFFERENT VENDORS THE HOOD (ITEM #5) MAY VARY IN OUTSIDE DIAMETER CAUSING POTENTIAL STRAIN RELIEF GRIPPING PROBLEM. SHOULD THIS CONDITION BE PRESENT USE ITEM #4 (9107834) AT JUNCTION OF CABLE AND HOOD
7. PLACE ITEM #4 (9107256) OVER SHIELD WIRE J1-A, J1-B, P1-1, P1-7.

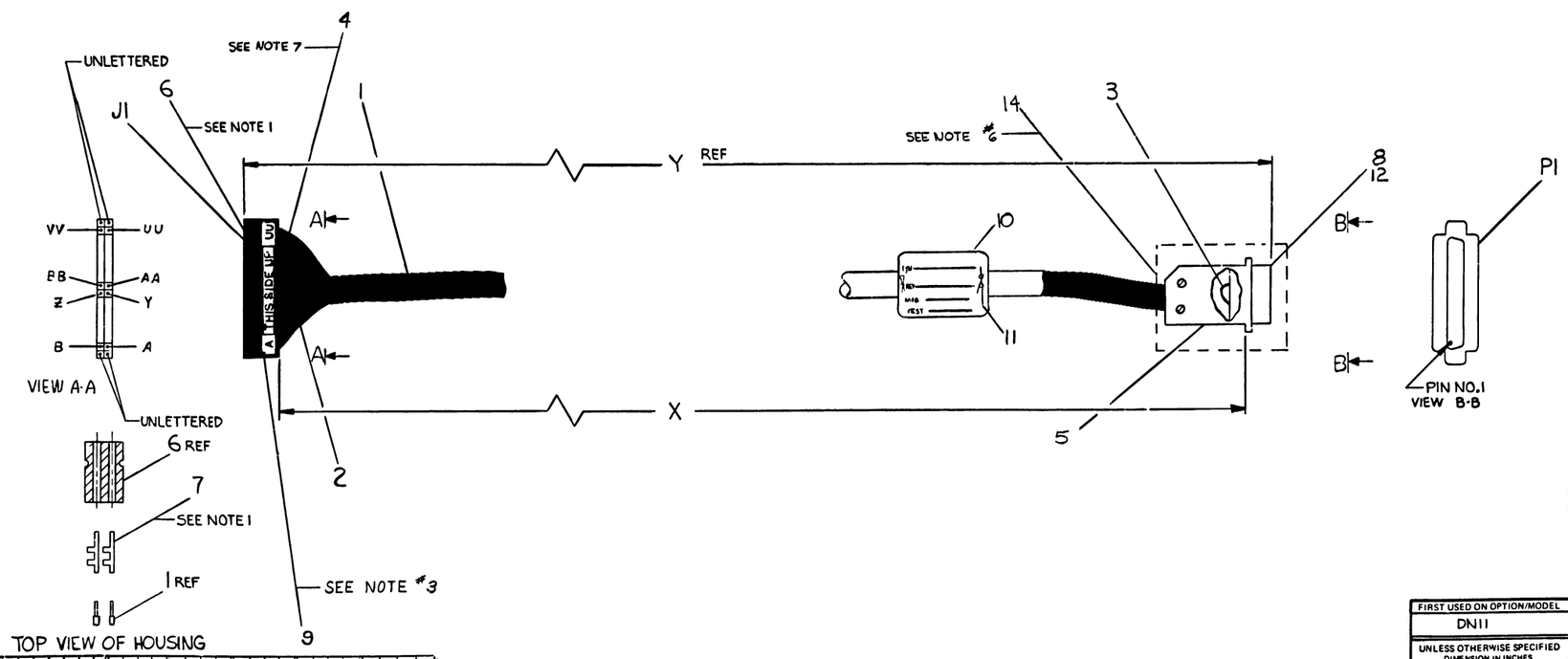

QTY	DESCRIPTION	PART NO	ITEM NO
1	HOOD	121049350	15
A/R	TAPE, DOUBLE SIDED	9007834	14
1	MALE S-PEW	1210493-51	13
2	PIN CONTACT	1215241	12
2	TIE WRAPS	9007031	11
1	CABLE, LABEL	9009532	10
1	LABEL, THIS SIDE UP	3611567	9
23	PIN 24-28 AWG	1210493-43	8
23	SOCKET, #HT-68	1210089-5	7
1	HOUSING, #20383 BERG	1210918-15	6
1	SHELL AND INSERT MALE	1210493-31	5
A/R	TUBING, #22 AWG TEF BLK	9107256-00	4
A/R	WIRE, #26 AWG STRD TEF BLK	9107636-00	3
A/R	WIRE, #26 AWG STRD TEF RED	9107636-22	2
A/R	CABLE, 25 CONDUCTOR #26 AWG	9107736	1

PARTS LIST

REVISIONS CHK	CHANGE NO	REV	
	BCØ5C-00001	A	SMITH 7-14-78
	BCØ5C-00002	B	B. REGAN 10-29-78
	BCØ5C-00003	C	V. BASTIANI
	BCØ5C-00004	D	R. SMITH 12 JULY 78
	BCØ5C-00005	E	R. SMITH 8-9-78
	BCØ5C-00005	F	R. SMITH 5/19/79
	BCØ5C-MK007	H	R. HARRINGTON 6-15-79
			R. HARRINGTON 23 JUN 78

DEC FORM NO DRD 100-A

FIRST USED ON OPTION/MODEL	DN11
UNLESS OTHERWISE SPECIFIED DIMENSION IN INCHES TOLERANCES	DECIMALS: XXX = .005, XX = .02, X = 1; ANGLES: ±0° 30'
REMOVE BURRS AND BREAK SHARP CORNERS SURFACE QUALITY ✓	
MATERIAL	—
FINISH	—
DRN	S Roberts, DATE 11/3/71
CHK	R Cole, DATE 11/5/71
ENG	R W Smith, DATE 11/5/71
PROJ. ENG.	R W Smith, DATE 11/5/71
PROD	R C Collen, DATE 11/5/71
NEXT HIGHER ASSY	—
SCALE	NONE
SHEET	1 OF 1

digital EQUIPMENT CORPORATION MAYNARD MASSACHUSETTS

TITLE: CABLE, MODEM BCØ5C

SIZE	CODE	NUMBER	REV
D	UA	BCØ5C-Ø-Ø	H

DIST

MK

"THIS DRAWING AND SPECIFICATIONS, HEREIN, ARE THE PROPERTY OF DIGITAL EQUIPMENT CORPORATION AND SHALL NOT BE REPRODUCED OR COPIED OR USED IN WHOLE OR IN PART AS THE BASIS FOR THE MANUFACTURE OR SALE OF ITEMS WITHOUT WRITTEN PERMISSION. COPYRIGHT © 1975, DIGITAL EQUIPMENT CORPORATION"

WIRE TABLE

ITEM NO	DESCRIPTION AWG	COLOR	FROM CONNECTION	WITH	TO CONNECTION	WITH
3	22	BLK	P1-VV	7	P2-7	SOLDER
		GRN/WHT	P1-C		P2-25	
		GRN/BLK	P1-JJ		P2-12	
		ORN/BLK	P1-FF		P2-11	
		RED	P1-DD		P2-20	
		GRN	P1-BB		P2-8	
		BLU/WHT	P1-Z		P2-6	
		ORN	P1-X		P2-22	
		BLU	P1-V		P2-4	
		WHT	P1-T		P2-5	
		BLU/BLK	P1-R		P2-17	
		BLK/WHT	P1-N		P2-15	
		RED/WHT	P1-L		P2-24	
		WHT/BLK	P1-J		P2-3	
3		RED/BLK	P1-F		P2-2	SOLDER
8		BLK	P1-E	7	P1-M	7
8	22	BLK	P2-1	SOLDER	P2-7	SOLDER

LEGEND

NUMBER	VARIATION DIM "X"	DIM "Y" PRECUT
BCØ3L-1Ø	1ØFT ± 2IN	1ØFT, 5IN
BCØ3L-5	5FT ± 2IN	5FT, 5IN
BCØ3L-1K	1FT 9IN ± 1IN	2FT
BCØ3L-Ø1	1FT ±1IN	1FT, 3IN

NOTES

1. EACH SOLDERED CONN ON P2 SHALL BE INSULATED WITH A .25 PIECE OF SHRINK TUBING (ITEM #5)
2. PLACE ITEM #9 (THIS SIDE UP STICKER) ON LETTERED SIDE OF ITEM #4 (CONN HOUSING) AS SHOWN.
3. FOR STRAIN RELIEF WRAP 2 TURNS OF TAPE (ITEM #6) AROUND CABLE (ITEM #3) AS SHOWN.
4. PINS MARKED * IN VIEW B-B ARE NOT USEABLE
5. *WIRES COMING FROM CENTER OF PLUG CONN SHOULD BE 5/8 LG., ALL OTHERS SHOULD BE CONFINED INTO HOOD OF CONN. SO THAT THEY'RE NOT BUNCHED.*
6. PLACE LOCKWASHER (SUPPLIED WITH ITEM #10) BETWEEN SPACER AND CONNECTOR FLANGE. DISCARD NUT (QTY.2) SUPPLIED WITH ITEM #10.

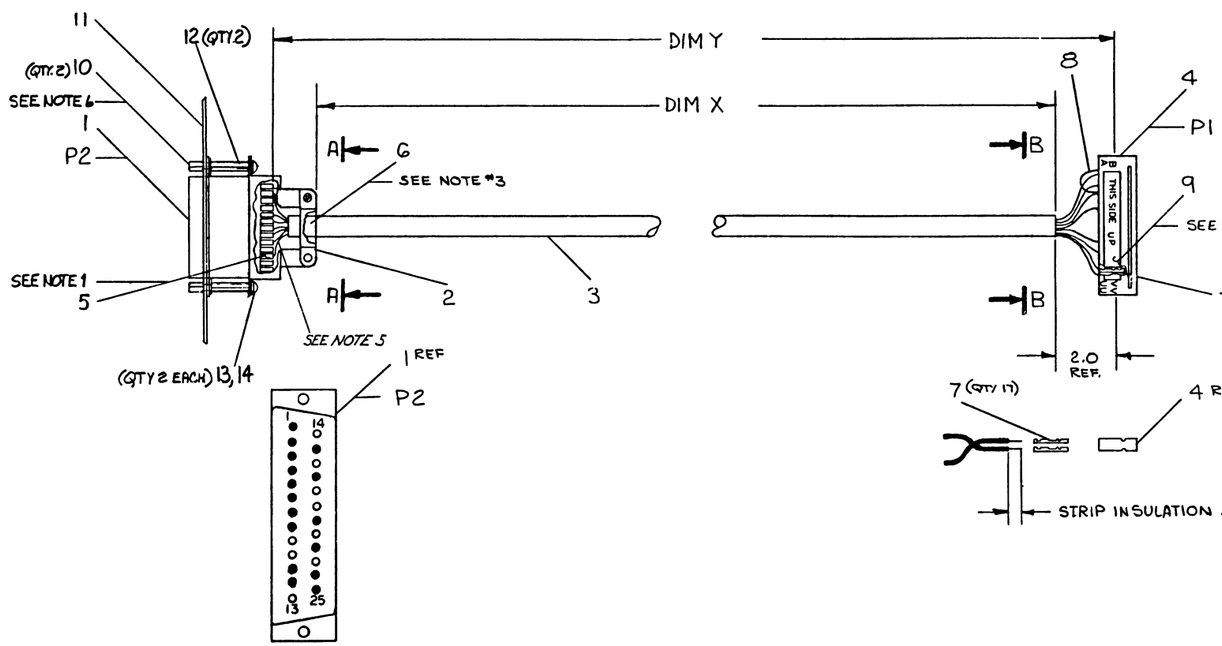

VIEW A-A
(REAR VIEW)
SCALE: NONE

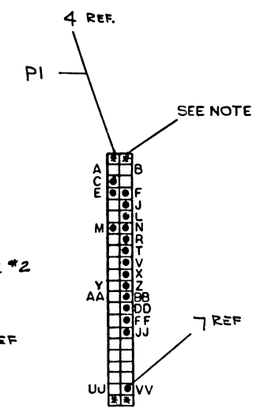

VIEW B-B
(REAR VIEW)
SCALE: NONE

2	WASHER, LOCK #4	9006688	14
2	SCR. PHL PAN HD #4-40 X .25	9008301-1	13
2	SPACER, THREADED, HEX	9008833	12
1	PLATE, CONN. MTG.	B-MD-7414072-0-0	11
2	SCREW LOCK ASSY	9008451-00	10
1	LABEL (THIS SIDE UP)	3611567	9
3IN	WIRE, STRANDED #22 AWG IPVC (BLK)	9107350-00	8
17	SOCKET, CRIMP	1210089-07	7
A/R	TAPE, DOUBLE SIDED .50 WD	9007834	6
16	TUBING, HEAT SHRINK .12	9107255-09	5
1	CONN, 44 POS, HSG.	1210918-15	4
A/R	CABLE, 15 COND, 22 AWG.	9107672-00	3
1	HOOD, CONN.	1212516-00	2
1	CONNECTOR, PLUG, FILTERED	1214031-00	1

DESCRIPTION	DWG/PART NO	ITEM NO

UNLESS OTHERWISE SPECIFIED DIMENSIONS ARE IN INCHES

ANGLES ±0° 30'	CLASS OF ACCURACY (CHECK ONE)	NOMINAL LENGTH RANGE INCHES: OVER 0 TO 0.3	OVER 0.3 TO 1.2	OVER 1.2 TO 4.0	OVER 4.0 TO 12.0	OVER 12.0 TO 40.0	OVER 40.0 TO 80.0
SURFACE QUALITY IN MICROINCHES	MEDIUM	±.004	±.008	±.012	±.016	±.024	±.04
	PREFERRED	±.012	±.016	±.026	±.04	±.063	±0.1

QUANTITY & VARIATION

THIRD ANGLE PROJECTION

REMOVE BURRS AND BREAK SHARP CORNERS

DO NOT SCALE DWG

MATERIAL SEE PARTS LIST

FINISH

DRN 7/1/77
CHK
ENG
PROJ 5-1-78
PROG 6/1/78

NEXT HIGHER ASSY.

SCALE 1/1
SHEET 1 OF 1

FIRST USED ON

digital

TITLE FILTERED CABLE ASSY BCØ3L

SIZE	CODE	NUMBER	REV.
D	UA	BCØ3L-Ø Ø	F

DIST

REV.	CH.	CH. NOTE NO.	
A		BCØ3L-00002	B. SAMPSON 10-13-75
B		BCØ3L-00003	M. E. LEWANDOWSKI 15-Mar-76
C		BCØ3L-00004	R. SAMPSON 5-Aug-76
D		BCØ3L-00005	T. ORR 2 Sept 77
E		BCØ3L-01006	T. ORR 8-Mar-77
F		BCØ3L-MK007	T. ORR 3 Sept 78

DEC FORM NO.

This drawing and specifications, herein, are the property of Digital Equipment Corporation and shall not be reproduced or copied or used in whole or in part as the basis for the manufacture or sale of items without written permission.

DIGITAL EQUIPMENT CORPORATION
MAYNARD, MASSACHUSETTS

ENGINEERING SPECIFICATION

DATE 2-28-77

TITLE DL11-W Installation Procedure

REVISIONS

REV	DESCRIPTION	CHG NO	ORIG	DATE	APPD BY	DATE
A	ECO CHANGE	00002	B. CRAMM	8-77	B. Pratt DC	8-77

ENG	APPD	SIZE	CODE	NUMBER	REV
Bob Pratt		A	SP	DL11-W-2	A

DL11-W Installation Procedure

Installation of the M7856 module consists of the following preparations:

1) Switch selection of the address mode and register addresses.

2) Switch selection of vector address.

3) Switch selection of data format.

4) Switch selection of receiver and transmitter baud rates.

5) Switch selection of operation mode for the current loops.

6) Additional switch selections for compatability.

7) Installation of G8000 in systems where +15V is not available.

NOTE: The notation used to indicate a particular switch is as follows: SX-Y where X denotes the particular switch pack and Y denotes the individual switch in the pack. The switch pack is labeled on the P. C. board with an SX(ieS2) and the individual switches are labeled on the switch pack as are the on-off positions.

A. Register Address Assignments:

The DL11-W can respond to addresses with the following format:

17	16	15	14	13	12	11	10	9	8	7	6	5	4	3	2	1	0
1	1	1	1	1	1	1	SWITCHES										

Selects 1 of 4 Registers

Byte Control

The DL11-W can be operated in one of three different address selection modes. Normally, a DL11-W used as console terminal control would operate in the first mode, whereas additional DL11-W's would be operated in the second mode. The third mode is not normally used, but is included here for completeness.

Mode 1: Both the serial line unit and the real-time clock sections can be addressed. Due to common address selection logic, operation in this mode requires that the serial line unit addresses be restricted to 77756X. The line clock address is 777546.

Mode 2: Only the serial line unit section can be addressed. Address selection ranges from 74000 to 777777. Line clock is disabled and does not respond to address 777546.

Mode 3: Only the line clock section can be addressed at 777546. The serial line unit section does not respond to any address.

ADDRESS AND MODE SELECTION

Address Bit	A10	A09	A08	A07	A06	A05	A04	A03	N/A	N/A
Switch	S5-3	S5-2	S5-1	S5-4	S5-5	S5-6	S5-8	S5-7	S5-9	S5-10
Mode 1	Off	Off	Off	On	Off	Off	Off	On	Off	On
Mode 2*	Off	Off	Off	On	Off	Off	Off	On	On	Off
Mode 3	Off	Off	Off	On	Off	Off	On	On	On	On

*Address 77756X selected for serial line interface. Other addresses may be selected using SWITCH-OFF = 1 and SWITCH-ON = 0.

Note: Remove R63 from DL11-W's operated in Mode 2 to allow proper operation of a line frequency clock or DL11-W operated in Mode 1 or Mode 3.

Address assignments for serial lines are normally made in the ranges from 77650X to 77667X and from 77561X to 77617X.

B. Vector Address Assignments:

The line clock, if enabled, has a fixed vector address of 100 and cannot be changed. The serial line assignments are to floating vectors produced in the form XX0 (Receiver) and XX4 (Transmitter) where XX ranges from 00 to 77.

For a DL11-W used as the console device, the vector is 060/064. Additional DL11-W's vector addresses are floating.

V8	V7	V6	V5	V4	V3	V2	V1	V0
						0/1	0	0

Switch Selectable for Serial Line

Vector Bit	V8	V7	V6	V5	V4	V3
Switch	S2-8	S2-7	S2-5	S2-3	S2-6	S2-4
060/064	Off	Off	Off	On	On	Off

On = 1, Off = 0

C. Selection of Data Format:

1. Data Bits

Switches S4-3 and S4-4 control the number of data bits in the serial character as follows:

S4-4	S4-3	# of Data Bits
On	On	5
On	Off	6
Off	On	7
Off	Off	8

2. Parity

Parity is controlled by switches S4-2 and S4-6 as follows:

S4-2	S4-6	Parity
Off	Off	Off
On	Off	Off
Off	On	Even
On	On	Odd

3. Stop Bits

Switch S4-5 controls the number of stop bits selected in the serial character as follows:

S4-5	# of Stop Bits
On	1
Off	2 (or 1.5 if 5 data bits are selected)

D. Baud Rate Selection:

Receiver and Transmitter baud rates are independent, so any combination may be selected.

Baud Rate Switch Selections

Baud Rate	Receiver			Transmitter		
	S3-2	S3-3	S3-5	S4-10	S3-1	S3-4
110	Off	Off	Off	On	On	On
150	On	Off	Off	Off	On	On
300	Off	On	On	On	Off	Off
600	Off	On	Off	On	Off	On
1200	Off	Off	On	On	On	Off
2400	On	On	On	Off	Off	Off
4800	On	On	Off	Off	Off	On
9600	On	Off	On	Off	On	Off

E. Current Loop Operation Mode:

Normally, current loops should be in active mode, unless interfaced to another active loop, such as to another DL11.

Active - Passive Mode Selection

Transmitter	S1-1	S1-2	S1-3	S1-6	S1-7
Active	On	On	Off	Off	On
Passive	Off	Off	On	On	Off
Receiver	**S3-6**	**S3-7**	**S3-8**	**S3-9**	**S3-10**
Active	On	Off	On	Off	On
Passive	Off	On	Off	On	Off
Reader Enable	**S1-4**	**S1-5**	**S1-8**	**S1-9**	**S1-10**
Active	On	Off	On	Off	On
Passive	Off	On	Off	On	Off

F. Compatability Selection:

Switches S4-1 and S4-7 allow the DL11-W to be configured to replace DL11-A, B, C, and D options in most applications.

DL11-W Compatability Switches

Selectable	Switch	Description
Break Bit	S4-1	Enabled in the ON position. Should be disabled (switch OFF) if replacing a DL11-A, or DL11-B. Should be enabled (switch ON) if replacing a DL11-C or DL11-D.
Error Bits	S4-7	Error bit reporting is enabled in the ON position. Should be disabled if replacing DL11-A or DL11-B, and should be enabled if replacing DL11-C or DL11-D.

Note: Both EIA level and current loop signals are available at the berg connector on the module. No selection is necessary. The proper cable will pick up the correct signals.

G. G8000 Installation:

For DL11-W EIA operation, a positive voltage is required between 9 and 15 volts to operate the EIA drivers. For PDP-11/20 and PDP-11/15 systems with the H720 power supply, a G8000 module must be installed to provide this voltage. Using a filter network, this module converts the full-wave rectified "+8V" signal to a positive DC voltage.

1. Install G8000 into slot A02 or DD11-A.
2. Wire A03V2 to A02V2.
3. Wire A02N2 to CXXU1 where XX is the slot location of the M7856.

H. DL11-W Systems with +15V Available Using DD11-A

There is a special situation of using a DD11-A to mount a DL11-W in systems with +15V available. These systems have +15V available, and it appears at pin A03V2 of the DD11-A when using power harness such as 7009177, 7008855, or 7008909. In this situation, no G8000 is necessary, and +15V can be wired directly from A03V2 to CXXU1, where XX is the slot number of the DL11.

I. When using the DL11-W in an 11/05 processor pin CXXU1 has +15V available on it so no G8000 or no jumpers are required.

J. INSTALLATION

The DL11-W module plugs into an SPC slot. A wire must be installed to pick up the LTC L signal from the power supply and apply it to the line frequency input of the DL11-W.

When installed, the LTC L input to the DL11-W is located on pin CD1. Connect a length of 30 AWG wire from pin CD1 on the backplane to the pin on the backplane, as designated in Table 1-1, for each application.

Table 1-1 LTC L Connection

PDP Computer	Processor	Pin Number
11/04	KD11-D (4 slot)	C02D1,C03D1,C04D1
11/04	KD11-D (9 slot)	C02D1,C03D1,C04D1,C05D1, C06D1,C07D1,C08D1, or C09D1
11/05	KA11-A w/8K memory	C01D1,C02D1,C03D1,C04D1, or F08V2
11/05	KD11-A w/16K memory	C01D1 or F08V2
11/20	KA11	A13P2 or B12R1
11/34	KD11-E	C03D1,C04D1,C05D1,C06D1, C07D1,C08D1, or C09D1
11/35	KD11-A	F03R1 or C09D1
11/40	KD11-A	F03R1 or C09D1
11/45	KB11-A	C26D1,C27D1, or C28D1
11/55	KB11-D	C26D1,C27D1, or C28D1
11/70	KB11-B	C40D1,C41D1,C42D1,C43D1, or C44D1
11/70	KB11-C	C40D1, C41D1,C42D1,C43D1, or C44D1
DD11-B Peripheral Mounting Panel		C01D1,C02D1,C03D1, or C04D1
DD11-D Peripheral Mounting Panel		C01D1,C02D1,C03D1,C04D1, C05D1,C06D1,C07D1,C08D1,C09D1
DD11-A Peripheral Mounting Panel		A03P2

NOTE: A wire connection is not necessary for backplane pin numbers ending in D1. LTC L is already connected to the line frequency input of the DL11-W.

K. Installation

The DL11-W module plugs into an SPC slot. A wire must be installed to pick up the DCLOL signal from the power supply and apply it to the DCLOL input of the DL11-W.

When installed, the DCLOL input to the DL11-W is located on pin CN1. Connect a length of 30 AWG wire from pin CN1 on the backplane to the pin on the backplane, as designated in Table 1-2 for each application.

Table 1-2 DCLOL Connection

PDP Computer	Processor	Pin Number
11/04*	KD11-D (4 slot)	C03N1, C04N1
11/04*	KD11-D (9 slot)	C03N1 thru C09N1
11/05*	KA11-A w/8K Memory	C01N1, C02N1, C03N1, C04N1
11/05*	KD11-A w/16K Memory	C01N1
11/20	KA11	B11F2, B14F2, A13S2, A08S2, A03S2, B04D2, F06B2
11/34*	KD11-E	C03N1 thru C09N1
11/35	KD11-A	B09F2
11/40	KD11-A	B09F2
11/45*	KB11-A	C26N1, C26N1, C28N1
11/55*	KB11-D	C26N1, C26N1, C28N1
11/70*	KB11-B	C40N1, C41N1, C42N1, C43N1, C44N1
11/70*	KB11-C	C40N1, C41N1, C42N1, C43N1, C44N1
DD11-B Peripheral Mounting Panel		C01N1 thru C04N1
DD11-D Peripheral Mounting Panel		C01N1 thru C09N1
DD11-A Peripheral Mounting Panel		B01F2, B04F2, A03S2

*NOTE: A wire connection is not necessary for backplane pin numbers ending in N1 DCLOL. Is already connected to the input of the DL11-W.

"THIS DRAWING AND SPECIFICATIONS HEREIN ARE THE PROPERTY OF DIGITAL EQUIPMENT CORPORATION AND SHALL NOT BE REPRODUCED OR COPIED OR USED IN WHOLE OR IN PART AS THE BASIS FOR THE MANUFACTURE OR SALE OF ITEMS WITHOUT WRITTEN PERMISSION
COPYRIGHT © 1975 DIGITAL EQUIPMENT CORPORATION

NOTES:

1. ALL RESISTORS 1/4 W, 5% UNLESS OTHERWISE NOTED.
   ALL CAPACITORS ARE 100V, 20% UNLESS OTHERWISE NOTED.
2. JUMPER CONTROL OPERATIONS AS FOLLOWS:
   W1 THRU W4 SELECT CSR ADDRESS, W5 CAPACITOR FOR 5 SYN DLY, NOT USED.
3. E32 IS A SPARE LOCATION.

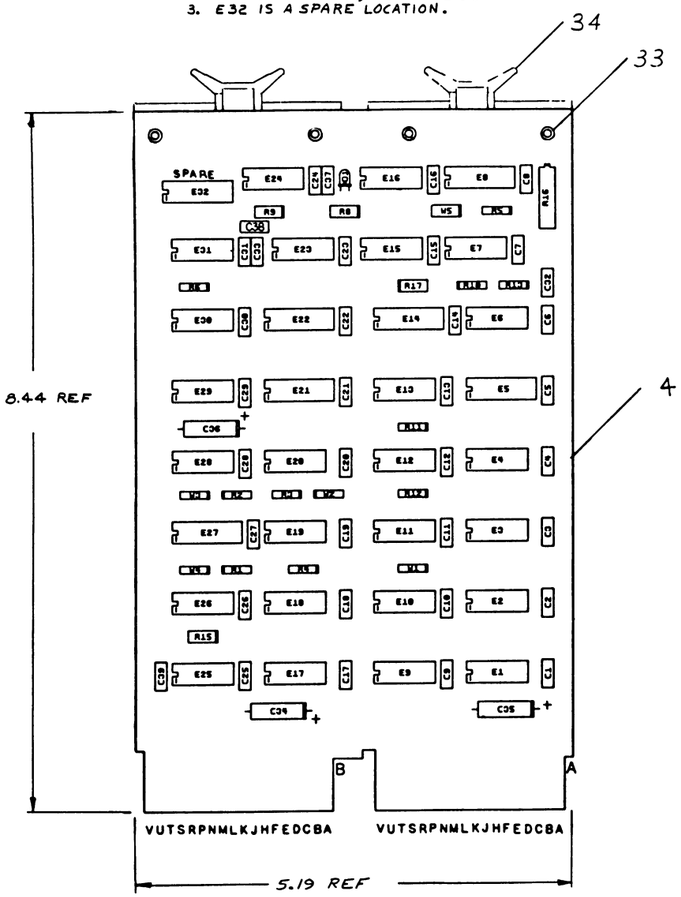

SPARES:

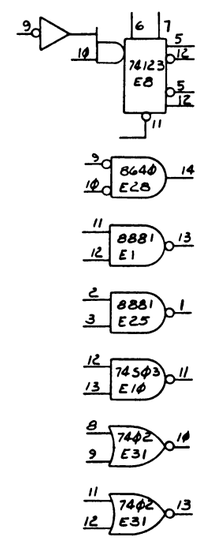

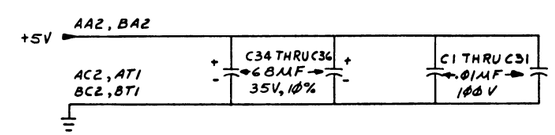

REF		CIRCUIT SCHEMATIC	D-CS-M7850-0-1	REF
REF		X-Y COORDINATE HOLE LOCATION	K-CO-M7850-0-4	1
REF		ASSY/DRILLING HOLE LAYOUT	D-AH-M7850-0-5	2
REF		MODULE ECO HISTORY	B-MH-M7850-0-6	3
1		ETCHED CIRCUIT BOARD	5010651-00	4
1	C39	CAP 470 PF, 100V, 5% (DM)	1000024-00	5
2	C33, C37	CAP 330 PF, 100V, 5% (DM)	1000023-00	6
32	C1 THRU C32	CAP .01 µF, 100 V, 20% DISC	1001610-01	7
3	C34, C35, C36	CAP 6.8 µF, 35 V, 10% STANT	1005306-00	8
1	D1	DIODE, LED.	1110324-00	9
5	R1 THRU R5	RES 4.7K 1/4W 5%	1300447-00	10
3	R8, R9, R15	RES 100 1/4W 5%	1300229-00	11
5	R6, R10, R11, R12, R17	RES 470 1/4W 5%	1300316-00	12
1	R13	RES 1K 1/4W 5%	1300365-00	13
1	R16	RES 10K 3/4W 20% (76 PR.RST)	1309143-10	14
1	E24	I.C. 7400	1905575-00	15
1	E30	I.C. 7430	1905578-00	16
1	E31	I.C. 7402	1903004-00	17
1	E19	I.C. 314A	1909704-00	18
1	E23	I.C. 7408	1910155-00	19
4	E1, E9, E17, E25	I.C. 8881	1909705-00	20
1	E16	I.C. 74H04	1909931-00	21
1	E27	I.C. 7485	1910224-00	22
1	E8	I.C. 74123	1910436-00	23
1	E10	I.C. 74503	1910533-00	24
1	E15	I.C. 74S74	1910544-00	25
1	E21	I.C. 74174	1910652-00	26
2	E5, E22	I.C. 74157	1910655-00	27
9	E2, E3, E11, E12, E18 E20, E26, E28, E29	I.C. 8640	1911469-00	28
2	E4, E13	I.C. 745280	1911573-00	29
1	E14	I.C. 8266	1909934-00	30
2	E6, E7	I.C. 7474	1905547-00	31
4	W1 THRU W4	INSULATED JUMPER	9009185-00	32
4		EYELET	9006732-00	33
2		HANDLE, FLIP-CHIP (MAGENTA)	9008337-6	34

QTY	REF. DESIGNATION	DESCRIPTION	PART NO	ITEM NO

PARTS LIST

FIRST USED ON OPTION MODEL

ETCH BOARD REV B

IC TYPE	GND	+5V
8640	1	8
8266	8	16
74157	8	16
74174	8	16
74123	8	16
7485	8	16
314A	1	8

GND AND 5V ARE USUALLY PIN 7 AND 14 RESPECTIVELY EXCEPTIONS ARE STATED ABOVE

IC PIN LOCATIONS

DEC NO.	EIA NO.	DEC NO.	EIA NO

SEMICONDUCTOR CONVERSION CHART

REVISIONS: REV B — CHANGE NO. M7850-00001 — CHK — 2/8 — J MANTON 2/13/75

DRN. W. LUFKIN DATE 2-5-75
CHK'D DATE 2/17/75
ENG. DATE 2/19/75
PROD. ENG. DATE 2/19/75
PROD. DATE 2/28/75
NEXT HIGHER ASSY
SCALE
SHEET 1 OF 3

digital

TITLE PARITY MODULE

SIZE D CODE CS NUMBER M7850-0-1 REV. B

DIST.

DEC FORM NO. 000 195.0

"THIS DRAWING AND SPECIFICATIONS, HEREIN ARE THE PROPERTY OF DIGITAL EQUIPMENT CORPORATION AND SHALL NOT BE REPRODUCED OR COPIED OR USED IN WHOLE OR IN PART AS THE BASIS FOR THE MANUFACTURE OR SALE OF ITEMS WITHOUT WRITTEN PERMISSION. COPYRIGHT © 1975 DIGITAL EQUIPMENT CORPORATION"

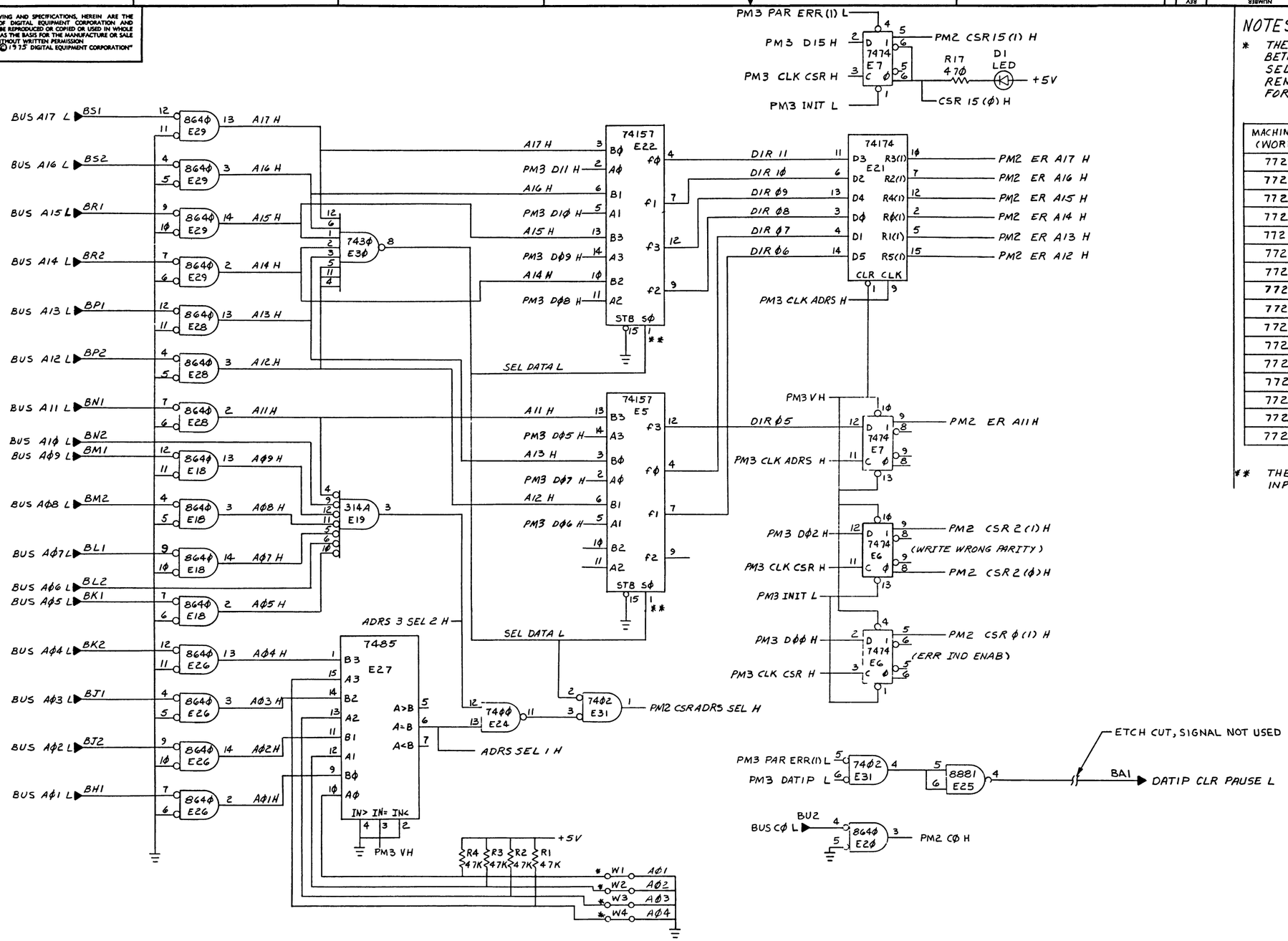

NOTES:

* THE CSR REGISTER ADDRESS IS LOCATED BETWEEN 772100 AND 772136. IT IS SELECTED WITH JUMPERS W1 THRU W4. REMOVING A JUMPER SELECTS A "ONE" FOR THAT BIT POSITION. (*)

MACHINE ADDRESS (WORDS) 8	W4 A4	W3 A3	W2 A2	W1 A1
772100	IN	IN	IN	IN
772102	IN	IN	IN	OUT
772104	IN	IN	OUT	IN
772106	IN	IN	OUT	OUT
772110	IN	OUT	IN	IN
772112	IN	OUT	IN	OUT
772114	IN	OUT	OUT	IN
772116	IN	OUT	OUT	OUT
772120	OUT	IN	IN	IN
772122	OUT	IN	IN	OUT
772124	OUT	IN	OUT	IN
772126	OUT	IN	OUT	OUT
772130	OUT	OUT	IN	IN
772132	OUT	OUT	IN	OUT
772134	OUT	OUT	OUT	IN
772136	OUT	OUT	OUT	OUT

** THE "A" INPUTS ARE SELECTED WHEN THE SEL INPUT GOES LOW. (**)

REVISIONS		
CHK	CHANGE NO	REV

TITLE	SIZE	CODE	NUMBER	REV.
PARITY MODULE (PM2)	D	CS	M7850-0-1	B
SCALE —	SHEET 2 OF 3	DIST.		

"THIS DRAWING AND SPECIFICATIONS, HEREIN ARE THE PROPERTY OF DIGITAL EQUIPMENT CORPORATION AND SHALL NOT BE REPRODUCED OR COPIED OR USED IN WHOLE OR IN PART AS THE BASIS FOR THE MANUFACTURE OR SALE OF ITEMS WITHOUT WRITTEN PERMISSION
COPYRIGHT © 1975 DIGITAL EQUIPMENT CORPORATION"

NOTES:

* B INPUTS SELECTED WHEN SEL IS LOW (*)

** SET R16 TO 110 NSEC ± 10 NS FROM SIGNAL ON PIN BE1 GOING LOW TO SIGNAL ON PIN BB2 GOING HIGH. (@ 1.5V LEVEL) (**)

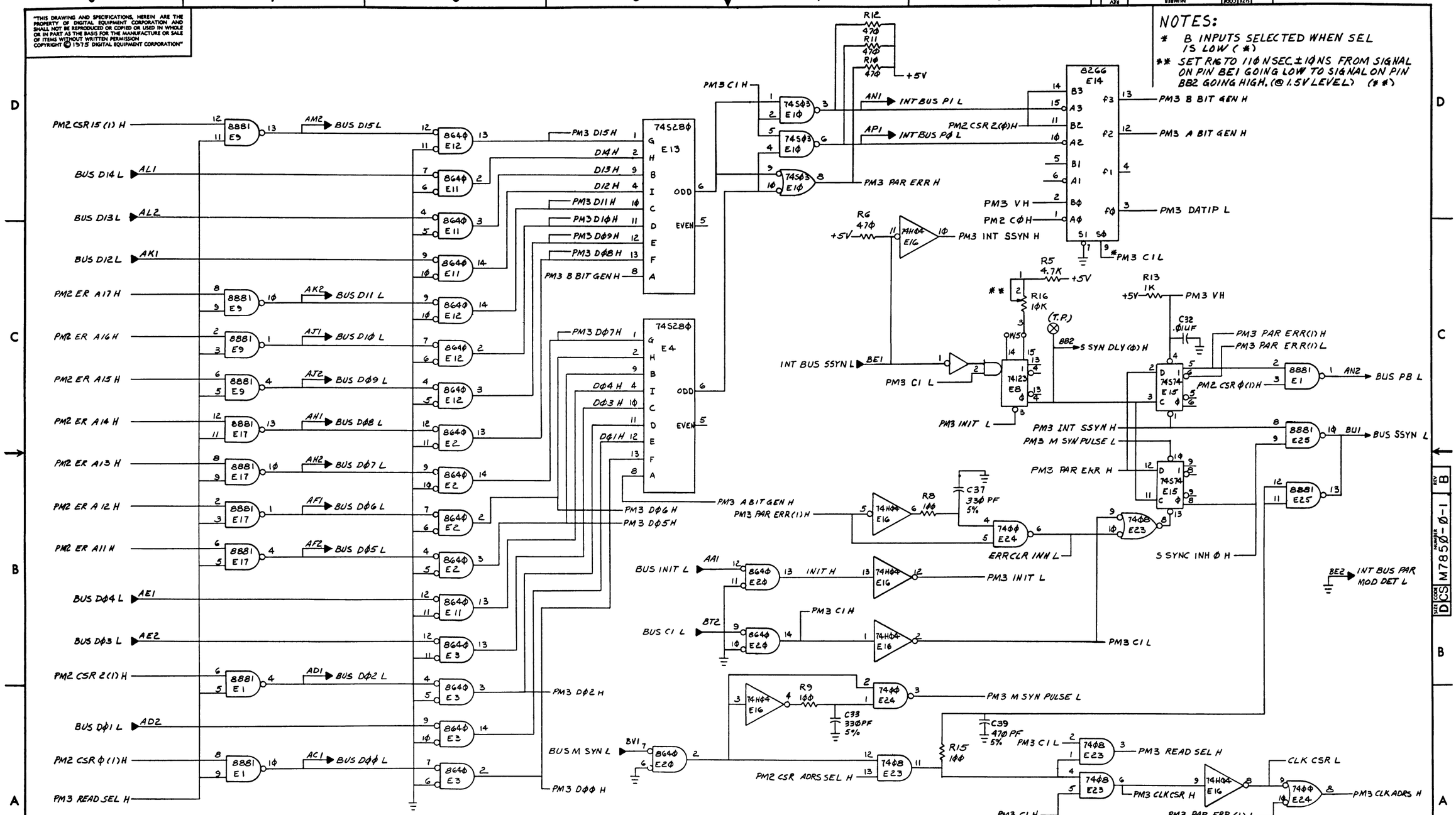

REVISIONS		
CHK	CHANGE NO	REV

TITLE	SIZE	CODE	NUMBER	REV.
PARITY MODULE (PM3)	D	CS	M7850-0-1	B
SCALE	SHEET 3 OF 3	DIST		

DEC FORM NO DRD 130

THIS SCHEMATIC IS FURNISHED ONLY FOR TEST AND MAINTENANCE PURPOSES. THE CIRCUITS ARE PROPRIETARY IN NATURE AND SHOULD BE TREATED ACCORDINGLY
COPYRIGHT 1969 BY DIGITAL EQUIPMENT CORPORATION

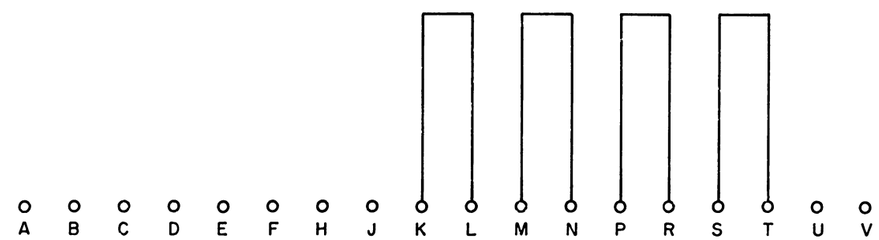

REV	CHG NO	CHK

DRN	BUTLER	DATE	11-19-69
CHK'D		DATE	
ENG		DATE	
PROD		DATE	

TRANSISTOR & DIODE CONVERSION CHART

DEC	EIA	DEC	EIA

digital EQUIPMENT CORPORATION
MAYNARD MASSACHUSETTS

TITLE GRANT CONTINUITY G727

SIZE	CODE	NUMBER	REV
B	CS	G727-0-1	

PRINTED CIRCUIT REV A

BLANK

"THE MATERIAL HEREIN IS FOR INFORMATION PURPOSES ONLY AND IS SUBJECT TO CHANGE WITHOUT NOTICE DIGITAL EQUIPMENT CORPORATION ASSUMES NO RESPONSIBILITY FOR ANY ERRORS WHICH MAY APPEAR HEREIN"

FIELD MAINTENANCE PRINT SET

"THIS DRAWING AND SPECIFICATIONS, HEREIN, ARE THE PROPERTY OF DIGITAL EQUIPMENT CORPORATION AND SHALL NOT BE REPRODUCED OR COPIED OR USED IN WHOLE OR IN PART AS THE BASIS FOR THE MANUFACTURE OR SALE OF ITEMS WITHOUT WRITTEN PERMISSION. COPYRIGHT © 1975 , DIGITAL EQUIPMENT CORPORATION"

TABLE OF CONTENTS

FIELD MAINT. PRINT SET MS11-E	B-TC-MS11-E-1
MOS RAM (MS11-E)	A-PL-MS11-E-Ø
UNIBUS MOS MEMORY	D-CS-M7847-Ø-1

UNIT VARIATIONS COVERED BY THIS PRINT SET
MS11-E
MS11-EP
MS11-F
MS11-FP
MS11-J
MS11-JP

MS11-E

Field Maintenance Print Set

Digital Equipment Corporation

PRINT SET ORDER NO.
MPØØØ21

REVISIONS		
REV.		
CHG. NO.		
DATE		

USED ON OPTION/MODEL	
11/Ø4-AA	11/Ø4-DC
11/Ø4-AB	11/Ø4-DD
11/Ø4-AC	11/Ø4-EC
11/Ø4-AD	11/Ø4-ED
11/Ø4-BA	
11/Ø4-BB	
11/Ø4-BC	
11/Ø4-BD	
SHEET 1 OF 1	

DRN.	D. HEALY	DATE 10/1/75
CHK'D	D. HEALY	DATE 10/1/75
PROJ. ENG.		DATE 10/22/75
FIELD SERV.		DATE

digital

TITLE: FIELD SERVICE MAINTENANCE PRINT SET MS11-E

SIZE	CODE	NUMBER	REV.
B	TC	MS11-E-1	

DIST.

EN 01124 16 N675 (327)

DRB 124

BLANK

DIGITAL EQUIPMENT CORPORATION
MAYNARD, MASSACHUSETTS

PARTS LIST

MADE BY D. HEALY DATE 10/6/75	CHECKED D. HEALY DATE 10/6/75	SECTION 1
ENG R. BARRY R Barry DATE 10-22-75	PROD R.K. Peterson DATE 10/22/75	ISSUED SECT. 1

ITEM NO.	DWG NO./PART NO.	DESCRIPTION	MS11-E	MS11-EP	MS11-F	MS11-FP	MS11-J	MS11-JP						
	D-CS-M7847-AA-1	UNIBUS MOS MEM	1	-	-	-	-	-						
	D-CS-M7847-AB-1	UNIBUS MOS MEM	-	1	-	-	-	-						
	D-CS-M7847-AC-1	UNIBUS MOS MEM	-	-	1	-	-	-						
	D-CS-M7847-AD-1	UNIBUS MOS MEM	-	-	-	1	-	-						
	D-CS-M7847-AH-1	UNIBUS MOS MEM	-	-	-	-	1	-						
	D-CS-M7847-AJ-1	UNIBUS MOS MEM	-	-	-	-	-	1						

TITLE	ASSY NO.	SIZE	CODE	NUMBER	REV.	ECO NO.
MOS RAM (MS11-E)	NONE	A	PL	MS11-E-Ø	A	MS11-E-00001
	SHEET 1 OF 1	DIST.				

DEC FORM DEC 16-(325)-1031-N870
DRA 110

"THIS DRAWING AND SPECIFICATIONS, HEREIN, ARE THE PROPERTY OF DIGITAL EQUIPMENT CORPORATION AND SHALL NOT BE REPRODUCED OR COPIED OR USED IN WHOLE OR IN PART AS THE BASIS FOR THE MANUFACTURE OR SALE OF ITEMS WITHOUT WRITTEN PERMISSION
COPYRIGHT © 1975 DIGITAL EQUIPMENT CORPORATION"

NOTES:

1. THERMAL COMPOUND (ITEM NO. 72) TO BE PLACED UNDER E41.

2. JUMPERS TO BE CONNECTED FOR EACH VARIATION AS FOLLOWS:

BA,CA,DA,EA,BB,CB,DB,EB,YA & YB	W3 TO W4
BC,CC,DC,EC,BD,CD,DD,ED,YC & YD	W1 TO W2 & W3 TO W4
BE,CE,DE,EE,BF,CF,DF,EF,BH,CH,DH,EH, BJ,CJ,DJ,EJ,YE,YF,YH & YJ	W1 TO W2, W3 TO W4, & W5 TO W6

2.(CONT) CONNECTIONS TO BE MADE USING BUS WIRE (ITEM NO. 73).

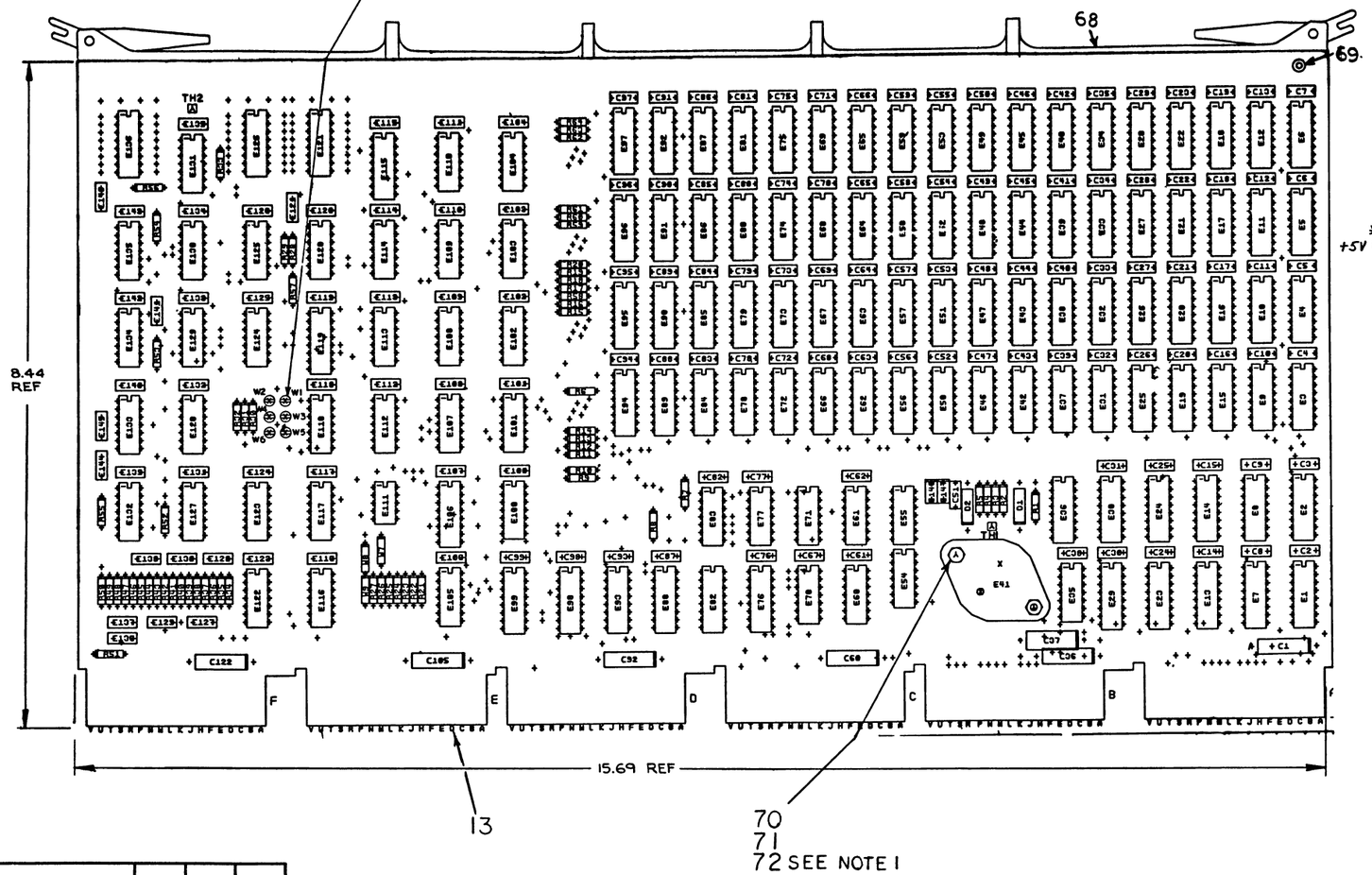

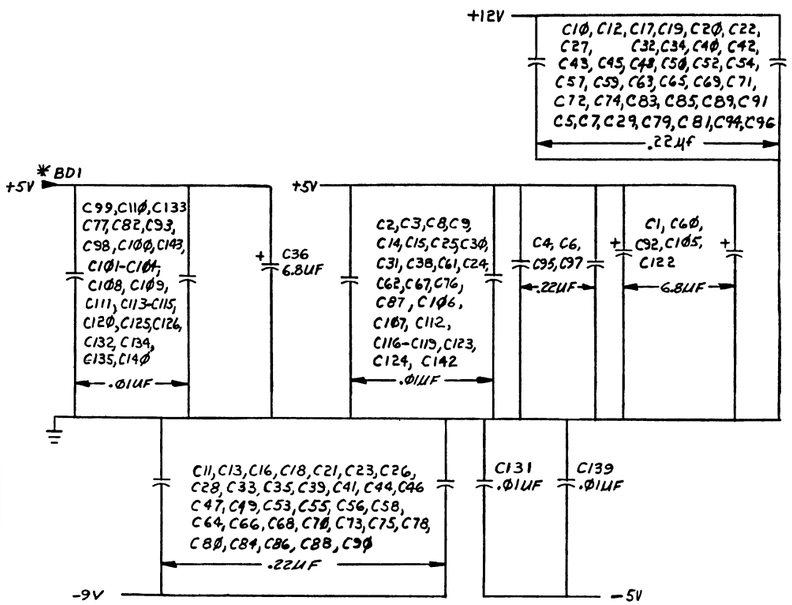

BUS GRANTS

DK2	DL2
DM2	DN2
DP2	DR2
DS2	DT2
CA1	CB1

7475	12	5	—
74S153	8	16	—
7510 7	7	14	13
74174	8	16	—
8641	8	16	—
8640	1	8	—
7483	12	5	—
IC TYPE	GND	+5V	−5V

GND AND +5V ARE USUALLY PIN 7 AND 14 RESPECTIVELY EXCEPTIONS ARE STATED ABOVE

IC PIN LOCATIONS

REV	CHANGE NO.	CHK	REVISIONS
K	M7847-00006	J. MANTON	4/1/76
J	M7847-00005	J. MANTON	31 MAR 76
H	M7847-00004	J. MANTON	9 May 77
F	M7847-00003	J. MANTON	13/4/77
E	M7847-00002	J. MANTON	12-9-75
D	M7847-00001	J. MANTON	30 OCT 75

DEC NO.	EIA NO	DEC NO.	EIA NO

SEMICONDUCTOR CONVERSION CHART

FIRST USED ON OPTION MODEL

FOR PARTS LIST REFER TO SHEETS 2 & 3

QTY	REF. DESIGNATION	DESCRIPTION	PART NO	ITEM NO

PARTS LIST

ETCH BOARD REV E

DRN		DATE 5/12/75
CHK'D		DATE 6/12/75
ENG		DATE 6/13/75
PROJ. ENG		DATE 6/13/75
PROD		DATE 6-12-75

NEXT HIGHER ASSY

SCALE

SHEET 1 OF 16

digital

TITLE UNIBUS MOS MEMORY

SIZE	CODE	NUMBER	REV.
D	CS	M7847-0-1	K

DIST.

DEC FORM NO. 5050 135-0

"THIS DRAWING AND SPECIFICATIONS, HEREIN, ARE THE PROPERTY OF DIGITAL EQUIPMENT CORPORATION AND SHALL NOT BE REPRODUCED OR COPIED OR USED IN WHOLE OR IN PART AS THE BASIS FOR THE MANUFACTURE OR SALE OF ITEMS WITHOUT WRITTEN PERMISSION. COPYRIGHT © 1977 DIGITAL EQUIPMENT CORPORATION"

NOTES:
1. DEC PART NO 1001610-00 IS AN ACCEPTABLE REPLACEMENT FOR DEC PART NO 1001610-01 (ITEM 14).
2. VARIATIONS YA THRU YJ. ITEM 21; D1 DIODE, ZENER IN757A, 9.1V 5% (1109990-00)
   ITEM 26; R2 RES 270 1/4W, 5% CC (1301972-00)
   VARIATIONS BA THRU BJ, CA THRU CJ, DA THRU DJ, EA THRU EJ. D1 DIODE, ZENER IN751A, 5.1V, 5% (1110994-00); R2 560 1/4W, 5%, CC (1301890-00)
   VARIATIONS YA THRU YJ ITEM 65; 4K16 PIN MOSRAM VBB -9V(21-11749-00)
   VARIATIONS BA THRU BJ ITEM 65; MOSTEK 4096 (21-12726-00)
   VARIATIONS CA THRU CJ ITEM 65; FUJITSU 8Z24 (21-13787-01)
   VARIATIONS DA THRU DJ ITEM 65; MOSTEK 4027 (21-13735-01)
   VARIATIONS EA THRU EJ ITEM 65; INTEL 2104A (21-13795-01)
   VARIATIONS FA THRU FJ ITEM 65; HITACHI (21-13892-01)
   VARIATIONS HA THRU HJ ITEM 65; DEC 4027 (21-13914-01)
   VARIATIONS JA THRU JJ ITEM 65; FUJITSU 8227 (21-14475-01)

PARTS LIST

YJ QTY	YH QTY	YF QTY	YE QTY	YD QTY	YC QTY	YB QTY	YA QTY	REF DESIGNATION	DESCRIPTION	PART NO	ITEM NO
1	1	1	1	1	1	1	1		DATA BASE TAPE	5011215-0-0	1
~~-~~	~~-~~	~~-~~	~~-~~	~~-~~	~~-~~	~~-~~	~~-~~		~~DATA BASE TAPE~~	~~M7847-YA-0~~	~~2~~
~~-~~	~~-~~	~~-~~	~~-~~	~~-~~	~~-~~	~~1~~	~~-~~		~~DATA BASE TAPE~~	~~M7847-YB-0~~	~~3~~
~~-~~	~~-~~	~~-~~	~~-~~	~~-~~	~~1~~	~~-~~	~~-~~		~~DATA BASE TAPE~~	~~M7847-YC-0~~	~~4~~
~~-~~	~~-~~	~~-~~	~~-~~	~~1~~	~~-~~	~~-~~	~~-~~		~~DATA BASE TAPE~~	~~M7847-YD-0~~	~~5~~
~~-~~	~~-~~	~~-~~	~~1~~	~~-~~	~~-~~	~~-~~	~~-~~		~~DATA BASE TAPE~~	~~M7847-YE-0~~	~~6~~
~~-~~	~~-~~	~~1~~	~~-~~	~~-~~	~~-~~	~~-~~	~~-~~		~~DATA BASE TAPE~~	~~M7847-YF-0~~	~~7~~
~~-~~	~~1~~	~~-~~	~~-~~	~~-~~	~~-~~	~~-~~	~~-~~		~~DATA BASE TAPE~~	~~M7847-YH-0~~	~~8~~
~~1~~	~~-~~	~~-~~	~~-~~	~~-~~	~~-~~	~~-~~	~~-~~		~~DATA BASE TAPE~~	~~M7847-YJ-0~~	~~9~~
REF	REF	REF	REF	REF	REF	REF	REF		UNIT ASSEMBLY	D-UA-M7847-0-0	10
REF	REF	REF	REF	REF	REF	REF	REF		DRILL & ETCH DWG	D-MD-5011215-0-0	11
REF	REF	REF	REF	REF	REF	REF	REF		MODULE ECO HISTORY	B-MI-M7847-0-6	12
1	1	1	1	1	1	1	1		ETCHED CIRCUIT BOARD	5011215	13
57	57	57	57	57	57	57	57	C2,C3,C8,C9,C14,C15,C24,C25, C30,C31,C38,C61,C62,C67,C76, C77,C82,C87,C93,C98-C104, C106-C120, C123-C127, C131-C137, C139 C140,C142,C143	CAP .01UF, 100V, 20% DISC	1001610-01 (SEE NOTE 1)	14
-	-	-	-	37	37	37	37	C6,C7,C12,C13,C18,C19,C22,C23, C28,C29,C34,C35,C41,C42,C45, C46,C49-C51,C54,C55,C58,C59 C65,C66 C70,C71,C74,C75,C80,C81, C85,C86 C90,C91,C96,C97	CAP .22UF, 50V CER	1010274-01	15
73	73	73	73	-	-	-	-	C4-C7,C10-C13 C16-C23,C26-C29 C32-C35 C39-C59 C63-C66, C68-C75,C78-C81,C83-C86,C88-C91, C94-C97			
6	6	6	6	6	6	6	6	C1,C36 ,C60 C62,C105 C122	CAP 6.8UF, 35V, 10% S TANT	1005306-00	16
1	1	1	1	1	1	1	1	C146	CAP 82PF, 100V, 5% DM	1000015-00	17
4	4	4	4	4	4	4	4	C128-C130 C138	CAP 220PF, 100V, 1% DM	1012121-00	18
2	2	2	2	2	2	2	2	C121,C141	CAP 220PF, 100V, 5% DM	1000021-00	19
2	2	2	2	2	2	2	2	C144, C145	CAP 560PF, 100V, 5% DM	1000025-00	20
1	1	1	1	1	1	1	1	D1	SEE NOTE #2		21
1	1	1	1	1	1	1	1	D2	DIODE, ZENER IN751A, 5.1V, 5%	1110994-00	22
21	21	21	21	21	21	21	21	R9-R20, R57-R65	RES 18, 1/4W, 5%, CC	1302124-00	23
16	16	16	16	16	16	16	16	R7,R8,R21-R27 R30-R33,R52, R54,R55	RES 1K, 1/4W, 5%, CC	1300365-00	24
5	5	5	5	5	5	5	5	R3-R5, R28, R29	RES 560, 1/4W, 5%, CC	1301890-00	25
1	1	1	1	1	1	1	1	R2	SEE NOTE #2		26
~~1~~	~~1~~	~~1~~	~~1~~	~~1~~	~~1~~	~~1~~	~~1~~	~~R63~~	~~RES 330, 1/4W, 5%, CC~~	~~1300309-00~~	~~27~~
1	1	1	1	1	1	1	1	R1	RES 10K, 1/4WM 5%, CC	1300479-00	28
1	1	1	1	1	1	1	1	R48	RES 30K, 1/4W, 5%, CC	1302394-00	29
7	7	7	7	7	7	7	7	R37,R38,R41,R45,R47,R49,R50	RES 1K, 1/4W, 1%, MF	1303114-00	30
1	1	1	1	1	1	1	1	R34	RES 681, 1/4W, 1%, MF	1302872-00	31
3	3	3	3	3	3	3	3	R36, R46, R51	RES 4.7K, 1/4W, 5%, CC	1300447-00	32
2	2	2	2	2	2	2	2	R56, R53	RES 100, 1/4W, 5%, CC	1300229-00	33
1	1	1	1	1	1	1	1	R43	RES 1.54K, 1/4W, 1%, MF	1312480-00	34
1	1	1	1	1	1	1	1	R40	RES 1.05K, 1/4W, 1%, MF	1312479-00	35
1	1	1	1	1	1	1	1	R35	RES 2.7K, 1/4W, 5%, CC	1300426-00	36
1	1	1	1	1	1	1	1	R39	RES 6.8K, 1/4W, 5%, CC	1301423-00	37
1	1	1	1	1	1	1	1	R44	RES 12K, 1/4W, 5%, CC	1300488-00	38
1	1	1	1	1	1	1	1	R42	RES 4.3K, 1/4W, 5% CC	1302389-00	39
6	6	6	6	6	6	6	6	E2,E8,E14,E24,E30 E36	IC 74174	1910652-00	40
5	5	5	5	5	5	5	5	E1,E7 E13,E23,E29	IC 8641	1911579-00	41

PARTS LIST

YJ QTY	YH QTY	YF QTY	YE QTY	YD QTY	YC QTY	YB QTY	YA QTY	REF DESIGNATION	DESCRIPTION	PART NO.	ITEM NO
1	1	1	1	1	1	1	1	E35	IC 8881	1909705-00	42
6	6	6	6	6	6	6	6	E54,E55,E60,E61,E70,E71	IC 8640	1911469-00	43
2	2	2	2	2	2	2	2	E77, E135	IC 7474	1905547-00	44
1	1	1	1	1	1	1	1	E83	IC 74197	1910035-00	45
5	5	5	5	5	5	5	5	E76,E82,E88,E115,E119	IC 7475	1909050-00	46
3	3	3	3	3	3	3	3	E93, E98, E99	IC 74S153	1910547-00	47
6	6	6	6	6	6	6	6	E100-E103, E107, E109	IC 74S140	1910546-00	48
2	2	2	2	2	2	2	2	E104, E105	IC 7420	1905577-00	49
1	1	1	1	1	1	1	1	E106	IC 7483	1909932-00	50
3	3	3	3	3	3	3	3	E110, E113 E131	IC 7400	1905575-00	51
3	3	3	3	3	3	3	3	E112 E118, E123	IC 74S20	1910539-00	52
1	1	1	1	1	1	1	1	E117	IC 7486	1910011-00	53
1	1	1	1	1	1	1	1	E124	IC74S04	1910534-00	54
1	1	1	1	1	1	1	1	E125	IC 74S03	1910533-00	55
3	3	3	3	3	3	3	3	E127, E132, E133	IC 75107	1910268-00	56
1	1	1	1	1	1	1	1	E128	IC 74S05	1910535-00	57
1	1	1	1	1	1	1	1	E129	IC 7404	1909686-00	58
2	2	2	2	2	2	2	2	E114, E122	IC 7440	1905579-00	59
1	1	1	1	1	1	1	1	E116	IC 74S11	1910537-00	60
1	1	1	1	1	1	1	1	E108	IC 7437	1910091-00	61
1	1	1	1	1	1	1	1	E41	IC 7812	1912048-01	62
1	1	1	1	1	1	1	1	E134	IC 74S10	1910536-00	63
1	1	1	1	1	1	1	1	E130	IC 74S74	1910544-00	64
-	-	-	-	-	-	-	16	E12,F18,E22 E28,E34,E40, E45, E49 E59,E65,E69,E75,E81, E87,E92,E97	SEE NOTE #2		65
-	-	-	-	-	-	18	-	E6,E12,E18,E22,E28,E34,E40, E45 E49 E53,E59,E65,E69,E75, E81,E87 E92,E97			
-	-	-	-	-	32	-	-	E11,E12,E17,E18,E21,E22, E27,E28,E33,E34,E39,E40,E44, E45,E48,E49,E58,E59,E64,E65, E68 E69,E74,E75,E80,E81,E86, E87,E91 E92,E96,E97			
-	-	-	-	36	-	-	-	E5,E6,E11,E12,E17,E18,E21,E22, E27,E28,E33,E34,E39,E40,E44, E45,E48,E49,E52,E53,E58,E59, E64,E65 E68 E69,E74,E75 E80 E81 E86 E87 E91 E92,E96,E97			
-	-	-	48	-	-	-	-	E10-E12,E16-E18,E20-E22, E26-E28,E32-E34,E38-E40,E43-E45, E47-E49,E57-E59,E63-E65,E67-E69, E73-E75,E79-E81,E85-E87,E90-E92, E95-E97			
-	-	54	-	-	-	-	-	E4-E6,E10-E12,E16-E18,E20-E22, E26-E28,E32-E34,E38-E40,E43-E45, E47-E49,E51-E53,E57-E59,E63-E65, E67-E69,E73-E75,E79-E81,E85-E87, E90-E92,E95-E97			
-	64	-	-	-	-	-	-	E9-E12,E15-E22,E25-E28 E31-E34, E37-E40,E42-E49,E56-E59, E62-E69,E72-E75,E78-E81,E84-E87, E89-E92,E94-E97			
72	-	-	-	-	-	-	-	E3-E6,E9-E12,E15-E22,E25-E28, E31-E34,E37-E40,E42-E53,E56-E59, E62-E69,E72-E75,E78-E81,E84-E87, E89-E92,E94-E97			

REVISIONS		
CHK	CHANGE NO.	REV.

TITLE	SIZE	CODE	NUMBER	REV.
UNIBUS MOS MEMORY	D	CS	M7847-Ø-1	K
SCALE — / —	SHEET 2 OF 16	DIST.		

"THIS DRAWING AND SPECIFICATIONS HEREIN ARE THE PROPERTY OF DIGITAL EQUIPMENT CORPORATION AND SHALL NOT BE REPRODUCED OR COPIED OR USED IN WHOLE OR IN PART AS THE BASIS FOR THE MANUFACTURE OR SALE OF ITEMS WITHOUT WRITTEN PERMISSION.
COPYRIGHT © 1977 DIGITAL EQUIPMENT CORPORATION"

YJ	YH	YF	YE	YD	YC	YB	YA	REF DESIGNATION	PARTS LIST DESCRIPTION	PART NO.	ITEM NO
BJ	BH	BF	BE	BD	BC	BB	BA				
CJ	CH	CF	CE	CD	CC	CB	CA				
DJ	DH	DF	DE	DD	DC	DB	DA				
EJ	EH	EF	EE	ED	EC	EB	EA				
FJ	FH	FF	FE	FD	FC	FB	FA				
HJ	HH	HF	HE	HD	HC	HB	HA				
QTY	QTY	QTY	QTY	QTY	QTY	QTY	QTY				
1	1	1	1	1	1	1	1	E111	DIP SWITCH	1211164-01	66
6	6	6	6	6	6	6	6		SPLIT LUGS	9006735-00	67
1	1	1	1	1	1	1	1		HANDLE ASSY	1210711-02	68
12	12	12	12	12	12	12	12		EYELET	9006732-00	69
2	2	2	2	2	2	2	2		NUT, KEP #4-40	9006557-00	70
2	2	2	2	2	2	2	2		SCR, PPH. #4-40 x 31	9006010-01	71
A/R	A/R	A/R	A/R	A/R	A/R	A/R	A/R		THERMAL COMPOUND	9008268-00	72
A/R	A/R	A/R	A/R	A/R	A/R	A/R	A/R		WIRE #22 AWG BUS	9107560-01	73
A/R	A/R	A/R	A/R	A/R	A/R	A/R	A/R		WIRE, #30 AWG WIRE WRAP	9105740-55	74
1	1	1	1	1	1	1	1	C37	CAP 8µF, 25V	1012064-01	75
2	2	2	2	2	2	2	2	C147, C148	CAP 47µF, 25V, CER	1010279-00	76
1	1	1	1	1	1	1	1	W8	JUMPER, WIRE INSULATED	9009185-00	77
1	1	1	1	1	1	1	1	E120	IC 74LS20	1912810-00	78
REF	REF	REF	REF	REF	REF	REF	REF		DRAWING DIRECTORY	B-DD-M7847-0	79

REVISIONS		
CHK	CHANGE NO	REV

TITLE	SIZE	CODE	NUMBER	REV.
UNIBUS MOS MEMORY	D	CS	M7847-Ø-1	K
SCALE	SHEET 3 OF 16	DIST.		

SIZE D CODE CS NUMBER M7847-Ø-1 REV K

"THIS DRAWING AND SPECIFICATIONS, HEREIN, ARE THE PROPERTY OF DIGITAL EQUIPMENT CORPORATION AND SHALL NOT BE REPRODUCED OR COPIED OR USED IN WHOLE OR IN PART AS THE BASIS FOR THE MANUFACTURE OR SALE OF ITEMS WITHOUT WRITTEN PERMISSION. COPYRIGHT © 1978 DIGITAL EQUIPMENT CORPORATION"

NOTE:
THESE OVERLAYS ONLY TO INDICATE POSITIONS FOR 4K MOS MEMORY IC'S & .22 UF CAPS

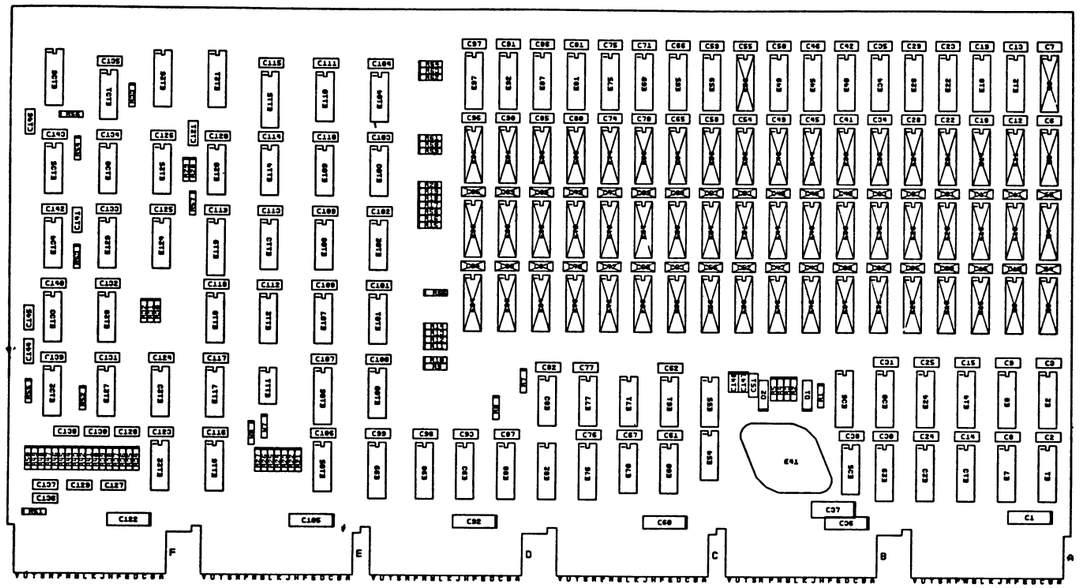

-YA,-BA,-CA,-DA,-EA,-FA,-HA,-JA.

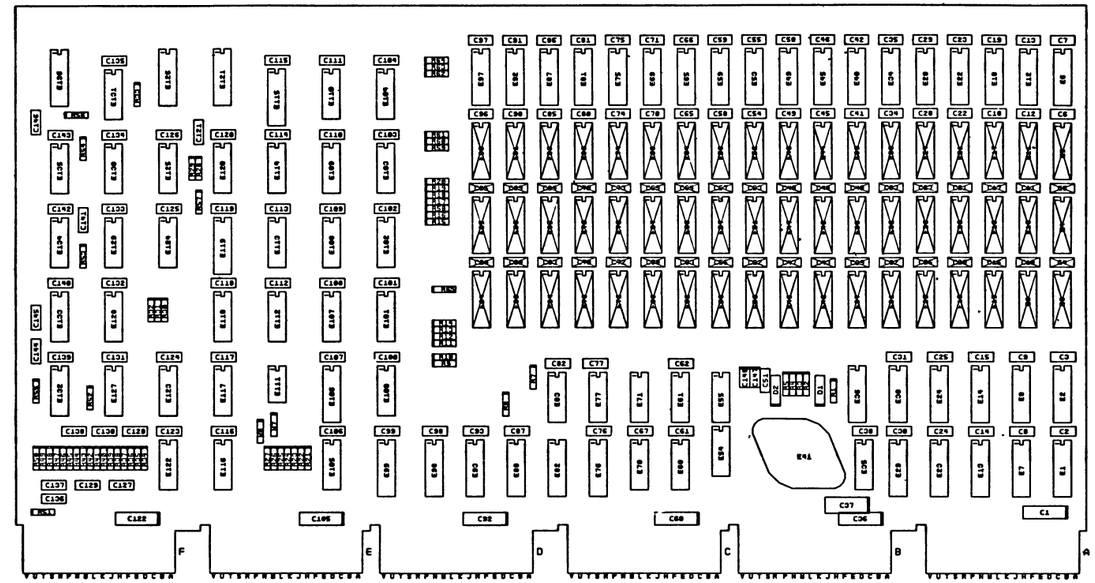

-YB,-BB,-CB,-DB,-EB,-FB,-JB,-HB

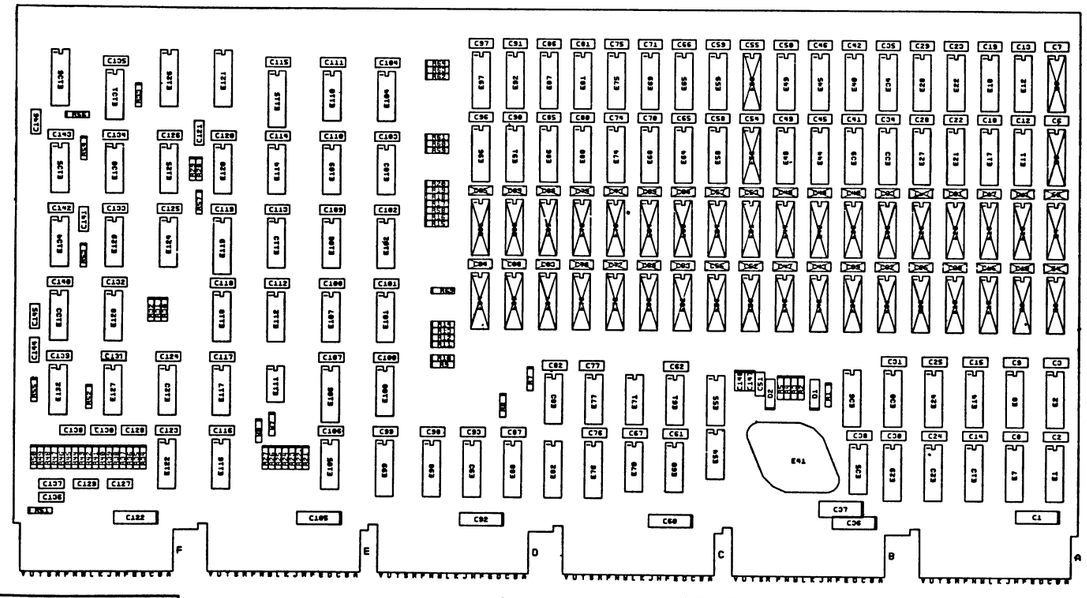

-YC,-BC,-CC,-DC,-EC,-FC,-HC,-JC

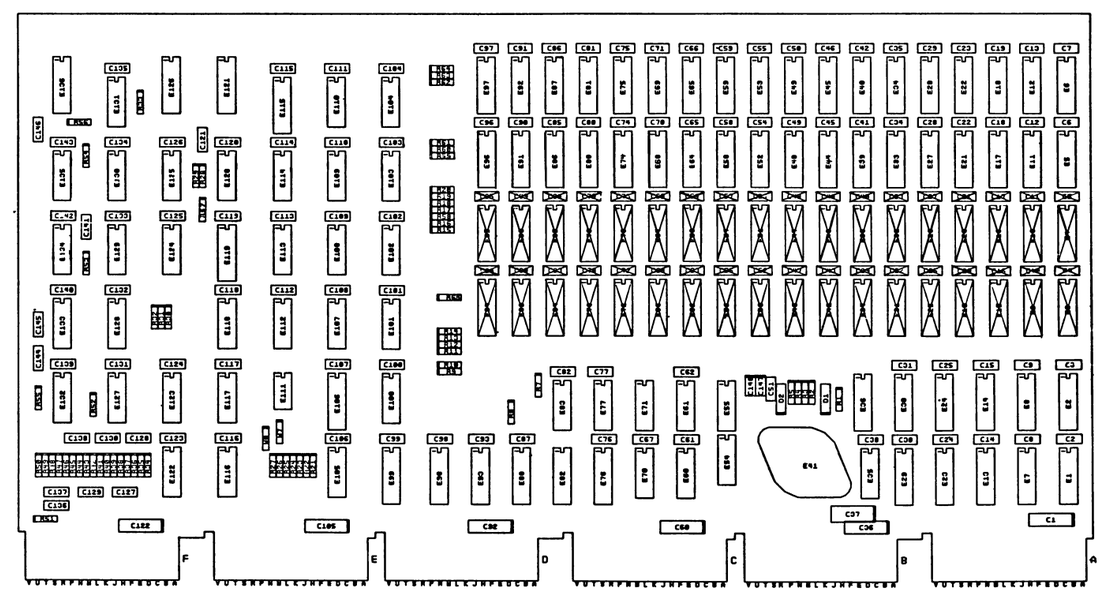

-YD,-BD,-CD,-DD,-ED,-FD,-HD,-JD.

REVISIONS		
CHK	CHANGE NO	REV

TITLE	SIZE	CODE	NUMBER	REV.
UNIBUS MOS MEMORY	D	CS	M7847-0-1	K
SCALE —	SHEET 4 OF 16	DIST		

DEC FORM NO DRD 130

"THIS DRAWING AND SPECIFICATIONS HEREIN ARE THE PROPERTY OF DIGITAL EQUIPMENT CORPORATION AND SHALL NOT BE REPRODUCED OR COPIED OR USED IN WHOLE OR IN PART AS THE BASIS FOR THE MANUFACTURE OR SALE OF ITEMS WITHOUT WRITTEN PERMISSION.
COPYRIGHT © 1978 DIGITAL EQUIPMENT CORPORATION"

NOTE:
THESE OVERLAYS ONLY TO INDICATE POSITIONS FOR 4K MOS MEMORY IC's AND .22 uF CAPS,

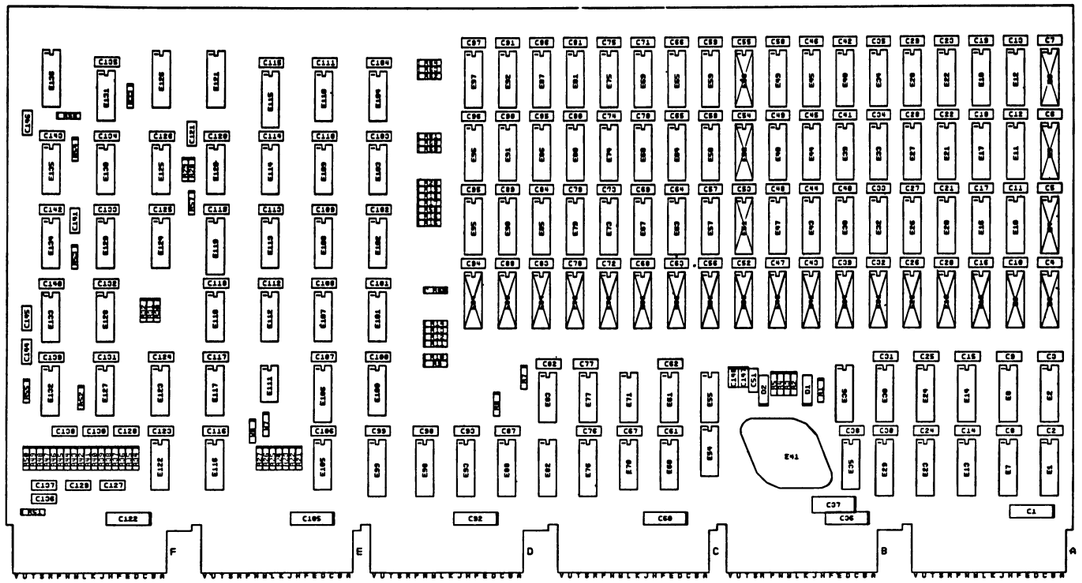

-YE,-BE,-CE,-DE, EE,-FE,-HE,-JE

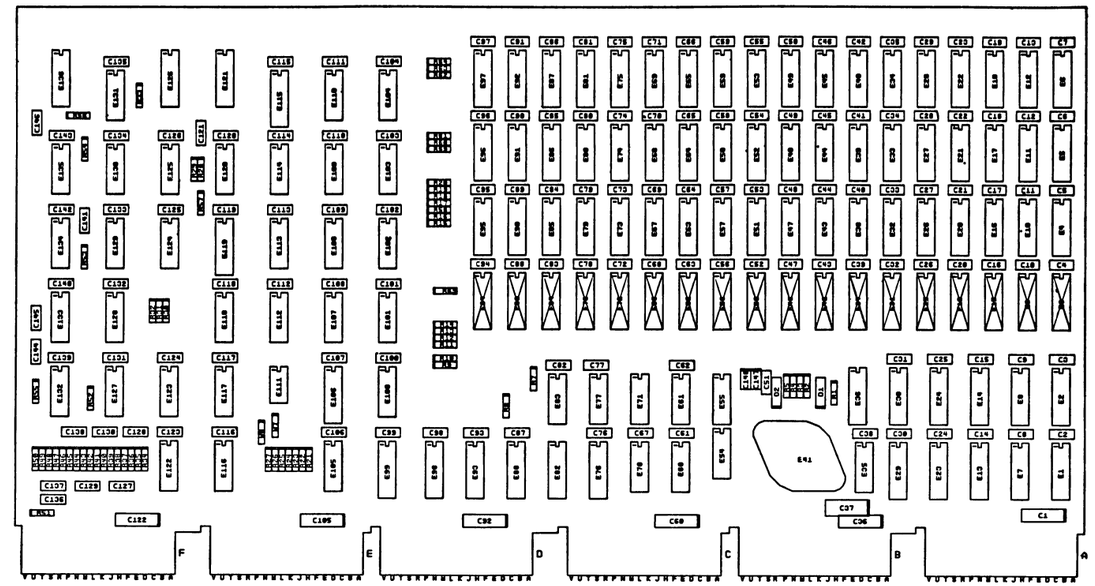

-YF,-BF,-CF,-DF, EF,-FF,-HF,-JF

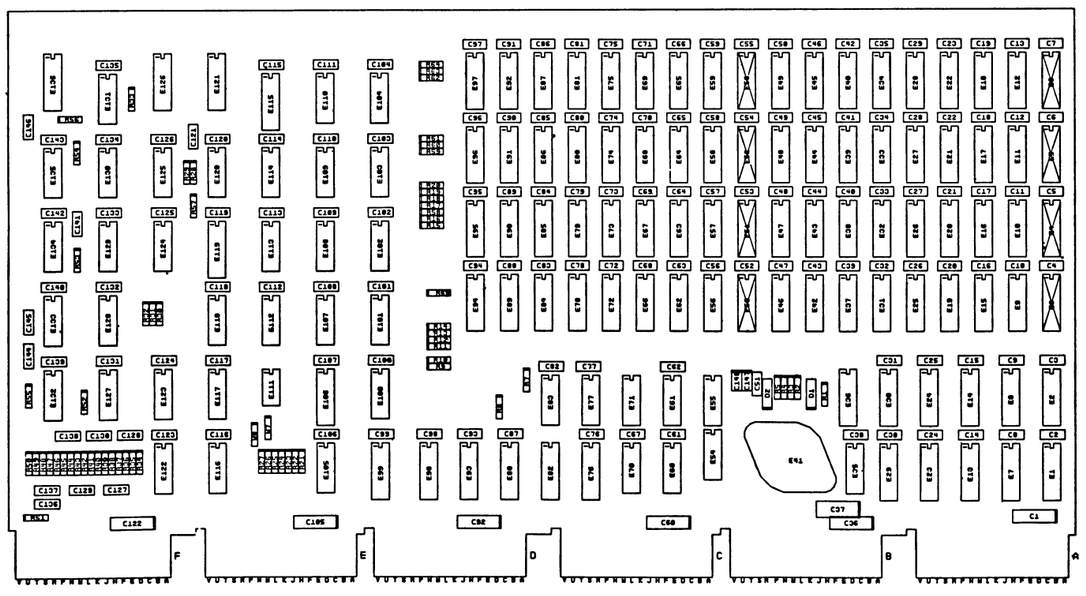

-YH,-BH,-CH,-DH,-EH,-FH,-HH,-JH

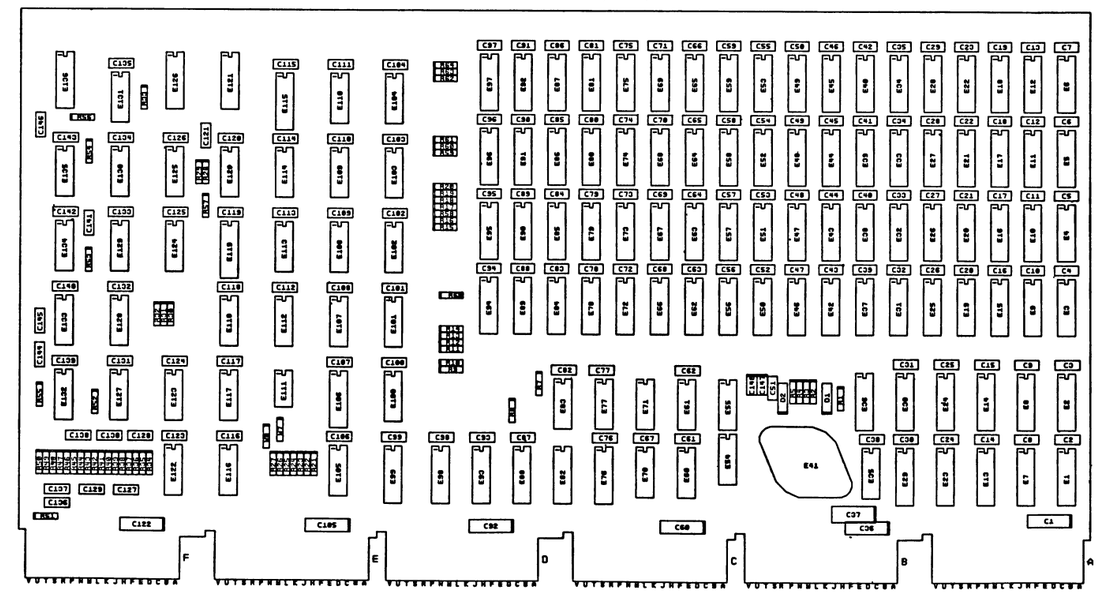

-YJ,-BJ,-CJ,-DJ, EJ,-FJ,-HJ,-JJ.

REVISIONS		
CHK	CHANGE NO	REV

TITLE	SIZE	CODE	NUMBER	REV.
UNIBUS MOS MEMORY	D	CS	M7847-0-1	K
SCALE —	SHEET 5 OF 16	DIST		

DEC FORM NO DRD 130

"THIS DRAWING AND SPECIFICATIONS, HEREIN, ARE THE PROPERTY OF DIGITAL EQUIPMENT CORPORATION AND SHALL NOT BE REPRODUCED OR COPIED OR USED IN WHOLE OR IN PART AS THE BASIS FOR THE MANUFACTURE OR SALE OF ITEMS WITHOUT WRITTEN PERMISSION
COPYRIGHT © 1975 DIGITAL EQUIPMENT CORPORATION"

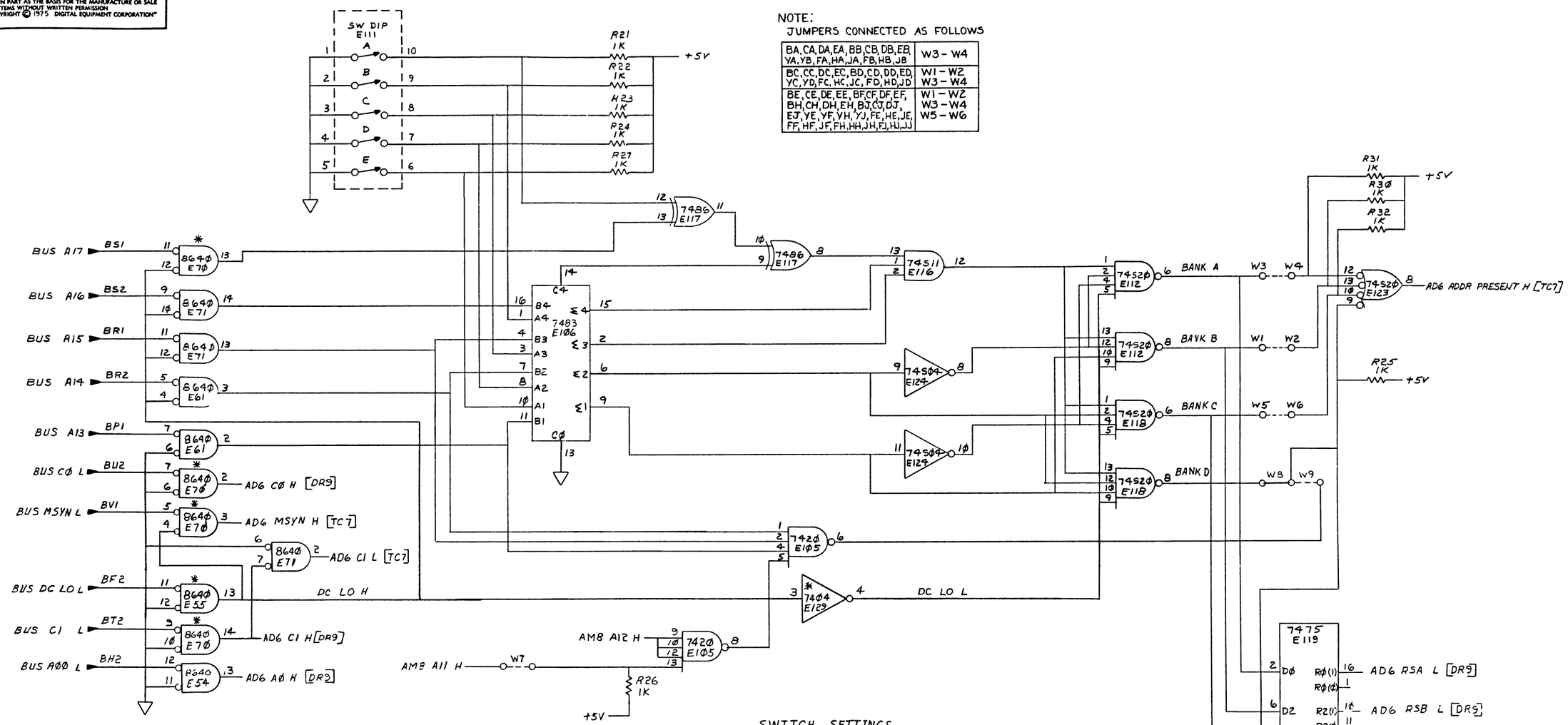

NOTE:
JUMPERS CONNECTED AS FOLLOWS

BA,CA,DA,EA,BB,CB,DB,EB, YA,YB,FA,HA,JA,FB,HB,JB	W3 - W4
BC,CC,DC,EC,BD,CD,DD,ED, YC,YD,FC,HC,JC,FD,HD,JD	W1 - W2 W3 - W4
BE,CE,DE,EE,BF,CF,DF,EF, BH,CH,DH,EH,BJ,CJ,DJ, EJ,YE,YF,YH,YJ,FE,HE,JE, FF,HF,JF,FH,HH,JH,FJ,HJ,JJ	W1 - W2 W3 - W4 W5 - W6

ASSEMBLY VARIATION	W7	W8	W9
FA,HA,JA,FB,HB,JB,FC,HC,JC,BA,CA,DA,EA,BB,CB,DB,EB,BC,CC,DC,EC,BD, FD,HD,JD,FE,HE,JE,FF,HF,JF,CD,DD,ED,BE,CE,DE,EE,BF,CF,DF & EF	OUT	OUT	OUT
FH,HH,JH,FJ,HJ,JJ,BH,CH,DH,EH,BJ,CJ,DJ & EJ NORMAL OPERATION	OUT	IN	OUT
FH,HH,JH,FJ,HJ,JJ,BH,CH,DH,EH,BJ,CJ,DJ & EJ 2K I/O PAGE	OUT	OUT	IN
FH,HH JH FJ,HJ,JJ,BH,CH,DH,EH,BJ,CJ,DJ & EJ 3K I/O PAGE	IN	OUT	IN

* A-E MUST BE SET FOR STARTING ADDRESS OF 100 000.

SWITCH SETTINGS

STARTING ADDRESS	SWITCH A	B	C	D	E	STARTING ADDRESS	SWITCH A	B	C	D	E	STARTING ADDRESS	SWITCH A	B	C	D	E	STARTING ADDRESS	SWITCH A	B	C	D	E
0	1	1	1	0	0	200 000	1	0	1	0	0	400,000	0	1	1	0	0	600,000	0	0	1	0	0
20,000	1	1	0	1	1	220,000	1	0	0	1	1	420,000	0	1	0	1	1	620,000	0	0	0	1	1
40,000	1	1	0	1	0	240,000	1	0	0	1	0	440,000	0	1	0	1	0	640,000	0	0	0	1	0
60,000	1	1	0	0	1	260,000	1	0	0	0	1	460,000	0	1	0	0	1	660,000	0	0	0	0	1
100,000	1	1	0	0	0	300,000	1	0	0	0	0	500,000	0	1	0	0	0	700,000	0	0	0	0	0
120,000	1	0	1	1	1	320,000	0	1	1	1	1	520,000	0	0	1	1	1	720,000	1	1	1	1	1
140,000	1	0	1	1	0	340,000	0	1	1	1	0	540,000	0	0	1	1	0	740,000	1	1	1	1	0
160,000	1	0	1	0	1	360,000	0	1	1	0	1	560 000	0	0	1	0	1						

0 = ON
1 = OFF

REVISIONS		
CHK	CHANGE NO	REV

(ADDRESS DECODE)

TITLE	SIZE	CODE	NUMBER	REV.
UNIBUS MOS MEMORY (AD6)	D	CS	M7847-Ø-1	K
SCALE —//—	SHEET 6 OF 16	DIST.		

DEC FORM NO DRD 138

"THIS DRAWING AND SPECIFICATIONS HEREIN ARE THE PROPERTY OF DIGITAL EQUIPMENT CORPORATION AND SHALL NOT BE REPRODUCED OR COPIED OR USED IN WHOLE OR IN PART AS THE BASIS FOR THE MANUFACTURE OR SALE OF ITEMS WITHOUT WRITTEN PERMISSION
COPYRIGHT © 1975 DIGITAL EQUIPMENT CORPORATION"

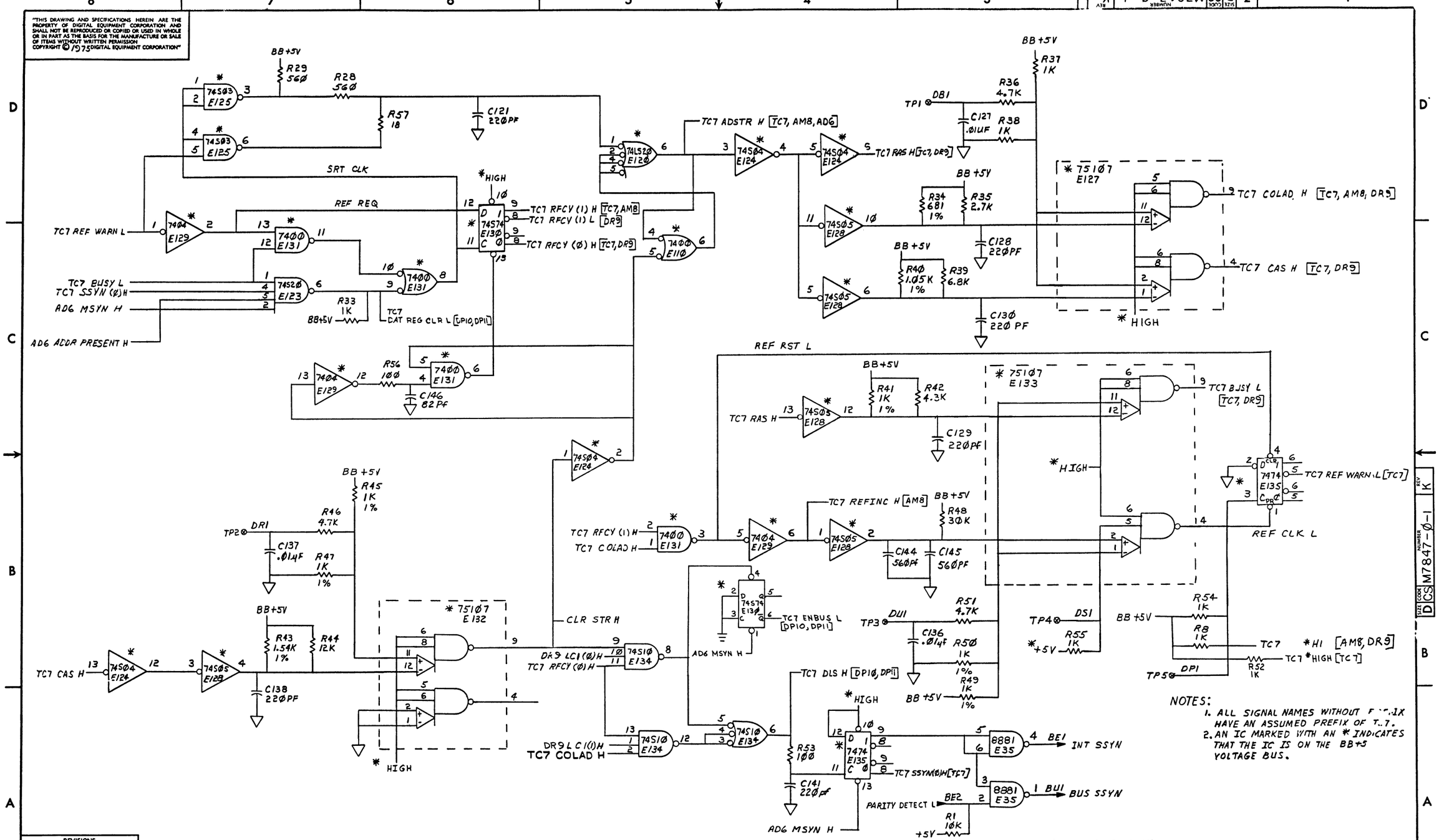

NOTES:
1. ALL SIGNAL NAMES WITHOUT F[illegible]IX HAVE AN ASSUMED PREFIX OF T[illegible]7.
2. AN IC MARKED WITH AN * INDICATES THAT THE IC IS ON THE BB+5 VOLTAGE BUS.

(TIMING CHAIN)

REVISIONS		
CHK	CHANGE NO	REV

TITLE	SIZE	CODE	NUMBER	REV.
UNIBUS MOS MEMORY (TC7)	D	CS	M7847-Ø-1	K
SCALE —	SHEET 7 OF 16		DIST.	

"THIS DRAWING AND SPECIFICATIONS, HEREIN, ARE THE PROPERTY OF DIGITAL EQUIPMENT CORPORATION AND SHALL NOT BE REPRODUCED OR COPIED OR USED IN WHOLE OR IN PART AS THE BASIS FOR THE MANUFACTURE OR SALE OF ITEMS WITHOUT WRITTEN PERMISSION
COPYRIGHT © 1975 DIGITAL EQUIPMENT CORPORATION"

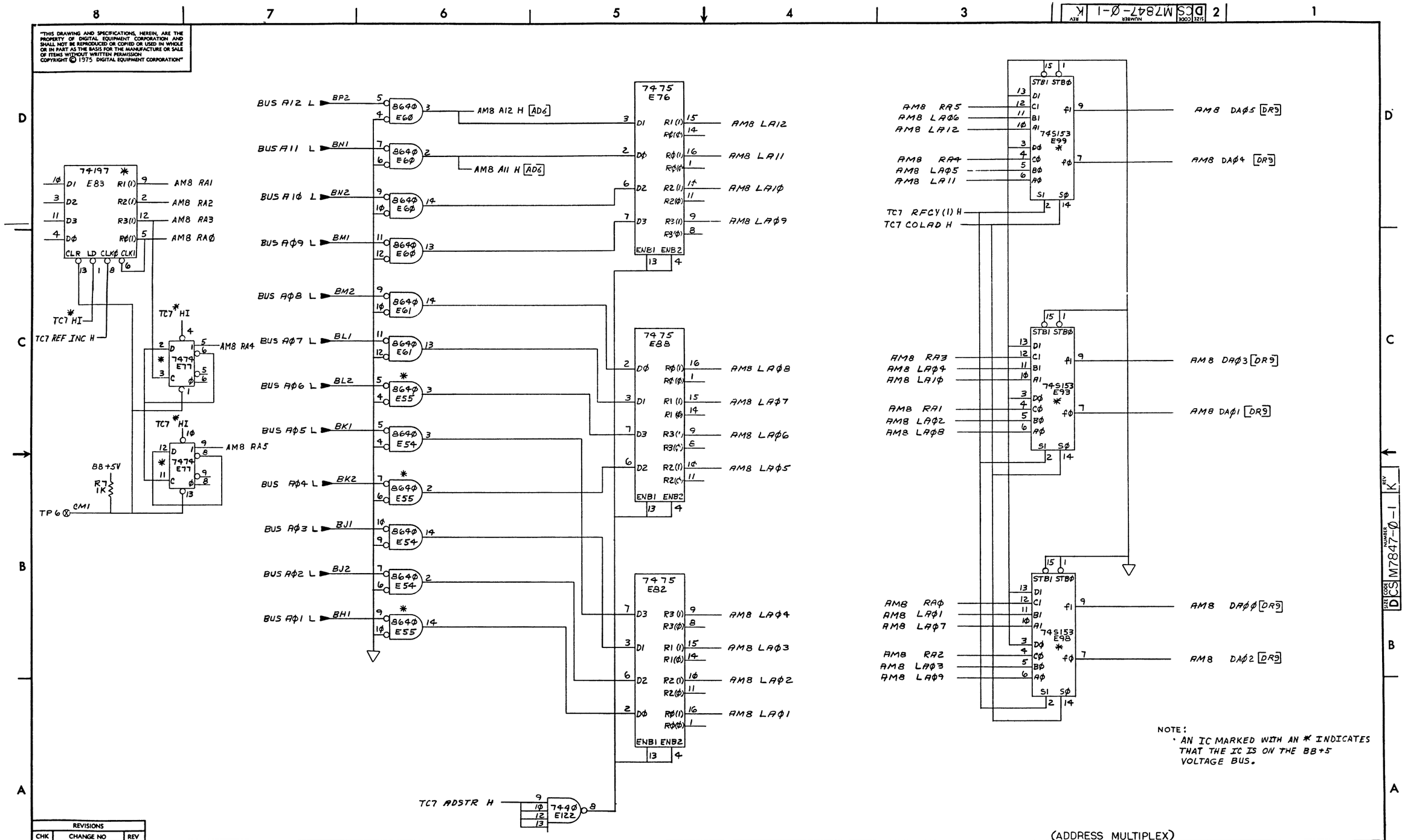

NOTE:
· AN IC MARKED WITH AN * INDICATES THAT THE IC IS ON THE BB+5 VOLTAGE BUS.

REVISIONS		
CHK	CHANGE NO	REV

(ADDRESS MULTIPLEX)

TITLE	SIZE	CODE	NUMBER	REV.
UNIBUS MOS MEMORY (AM8)	D	CS	M7847-Ø-1	K
SCALE —//—	SHEET 8 OF 16	DIST.		

"THIS DRAWING AND SPECIFICATIONS, HEREIN ARE THE PROPERTY OF DIGITAL EQUIPMENT CORPORATION AND SHALL NOT BE REPRODUCED OR COPIED OR USED IN WHOLE OR IN PART AS THE BASIS FOR THE MANUFACTURE OR SALE OF ITEMS WITHOUT WRITTEN PERMISSION. COPYRIGHT © 1975 DIGITAL EQUIPMENT CORPORATION"

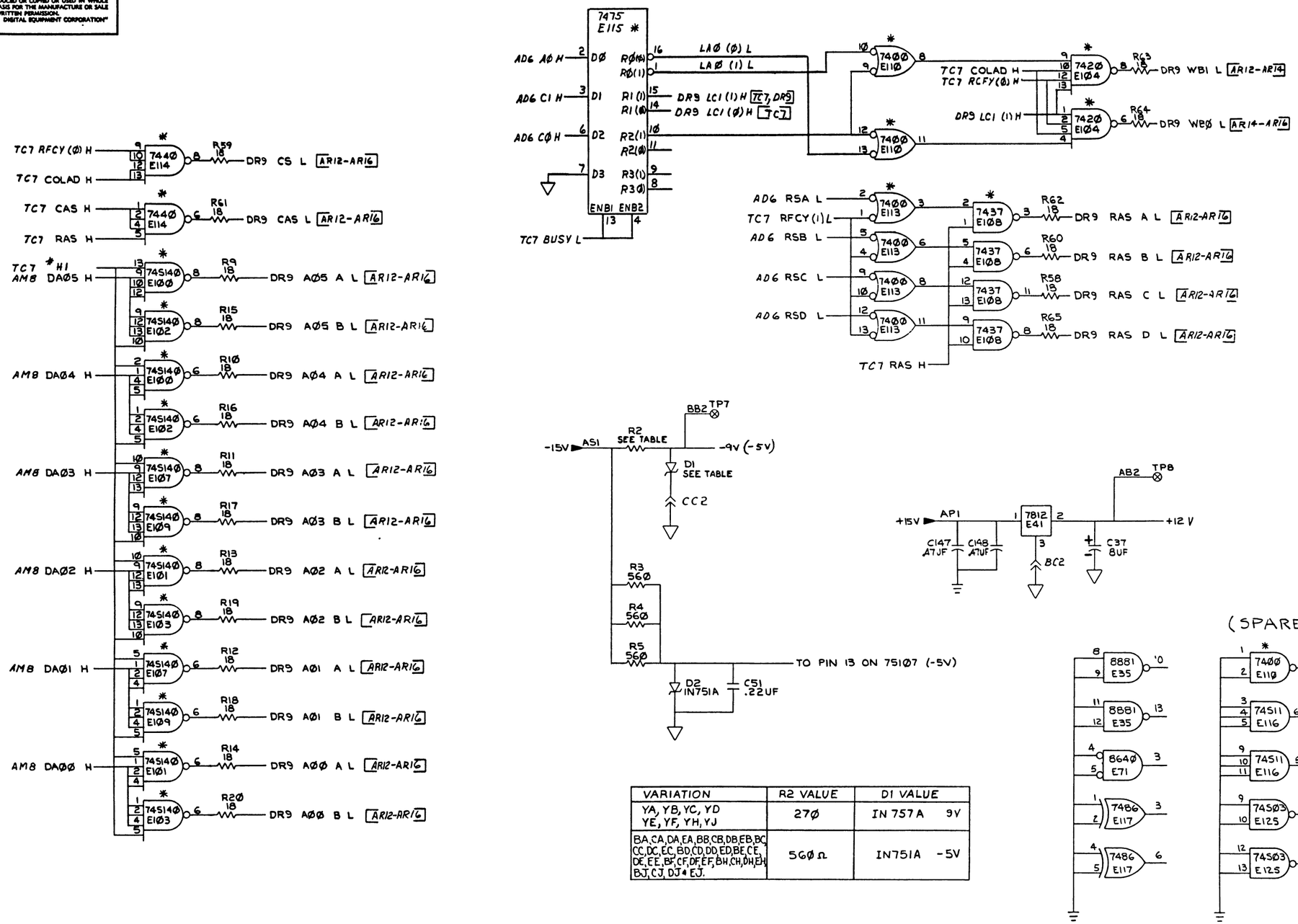

VARIATION	R2 VALUE	D1 VALUE
YA, YB, YC, YD YE, YF, YH, YJ	27Ø	IN 757A 9V
BA, CA, DA, EA, BB, CB, DB, EB, BC, CC, DC, EC, BD, CD, DD, ED, BE, CE, DE, EE, BF, CF, DF, EF, BH, CH, DH, EH, BJ, CJ, DJ & EJ.	56Ø Ω	IN751A -5V

REVISIONS		
CHK	CHANGE NO	REV

TITLE	SIZE	CODE	NUMBER	REV.
UNIBUS MOS MEMORY (DR9)	D	CS	M7847-Ø-1	K
SCALE —	SHEET 9 OF 16	DIST		

"THIS DRAWING AND SPECIFICATIONS, HEREIN ARE THE PROPERTY OF DIGITAL EQUIPMENT CORPORATION AND SHALL NOT BE REPRODUCED OR COPIED OR USED IN WHOLE OR IN PART AS THE BASIS FOR THE MANUFACTURE OR SALE OF ITEMS WITHOUT WRITTEN PERMISSION
COPYRIGHT © 1 7' DIGITAL EQUIPMENT CORPORATION"

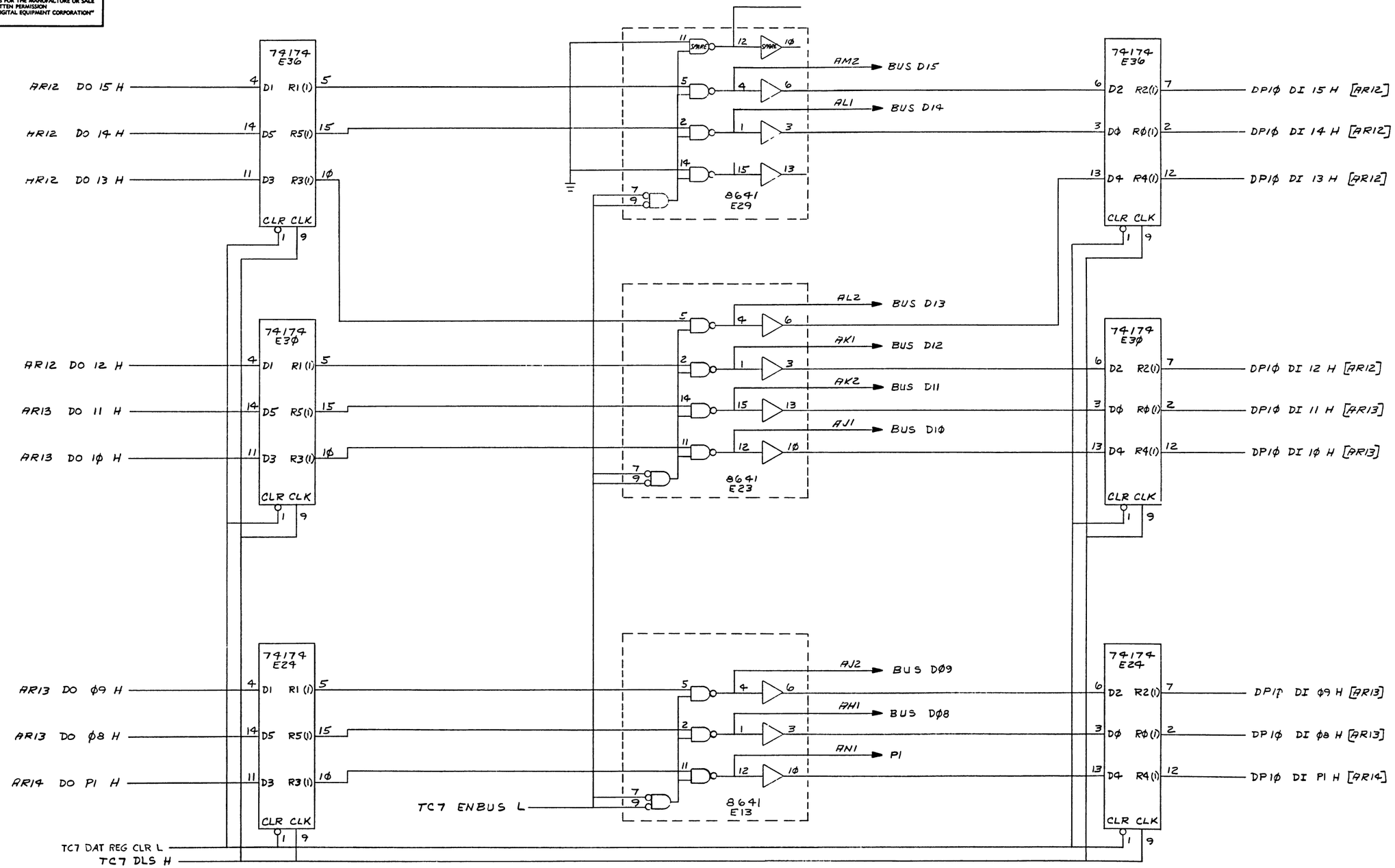

REVISIONS		
CHK	CHANGE NO	REV

(DATA PATH)

TITLE	SIZE	CODE	NUMBER	REV.
UNIBUS MOS MEMORY (DPIØ)	D	CS	M7847-Ø-1	K
SCALE — // — SHEET 10 OF 16	DIST.			

"THIS DRAWING AND SPECIFICATIONS, HEREIN, ARE THE PROPERTY OF DIGITAL EQUIPMENT CORPORATION AND SHALL NOT BE REPRODUCED OR COPIED OR USED IN WHOLE OR IN PART AS THE BASIS FOR THE MANUFACTURE OR SALE OF ITEMS WITHOUT WRITTEN PERMISSION.
COPYRIGHT © 1972, DIGITAL EQUIPMENT CORPORATION"

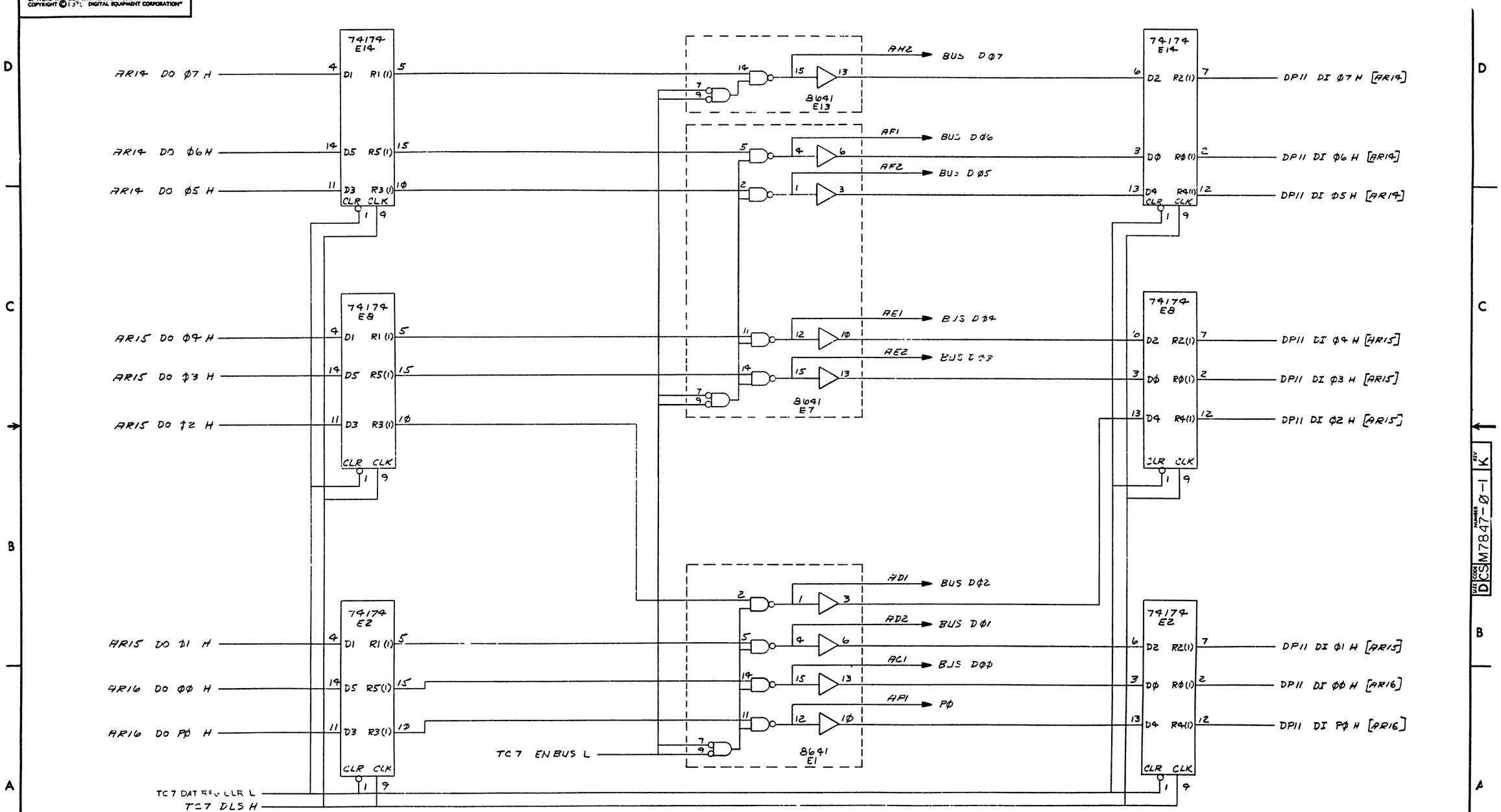

REVISIONS		
CHK	CHANGE NO	REV

(DATA PATH)

TITLE UNIBUS MOS MEMORY (DP11)

SIZE D CODE CS NUMBER M7847-Ø-1 REV. K

SCALE —//— SHEET 11 OF 16 DIST.

DEC FORM NO. 8RD 138

"THIS DRAWING AND SPECIFICATIONS HEREIN ARE THE PROPERTY OF DIGITAL EQUIPMENT CORPORATION AND SHALL NOT BE REPRODUCED OR COPIED OR USED IN WHOLE OR IN PART AS THE BASIS FOR THE MANUFACTURE OR SALE OF ITEMS WITHOUT WRITTEN PERMISSION COPYRIGHT © 1975 DIGITAL EQUIPMENT CORPORATION"

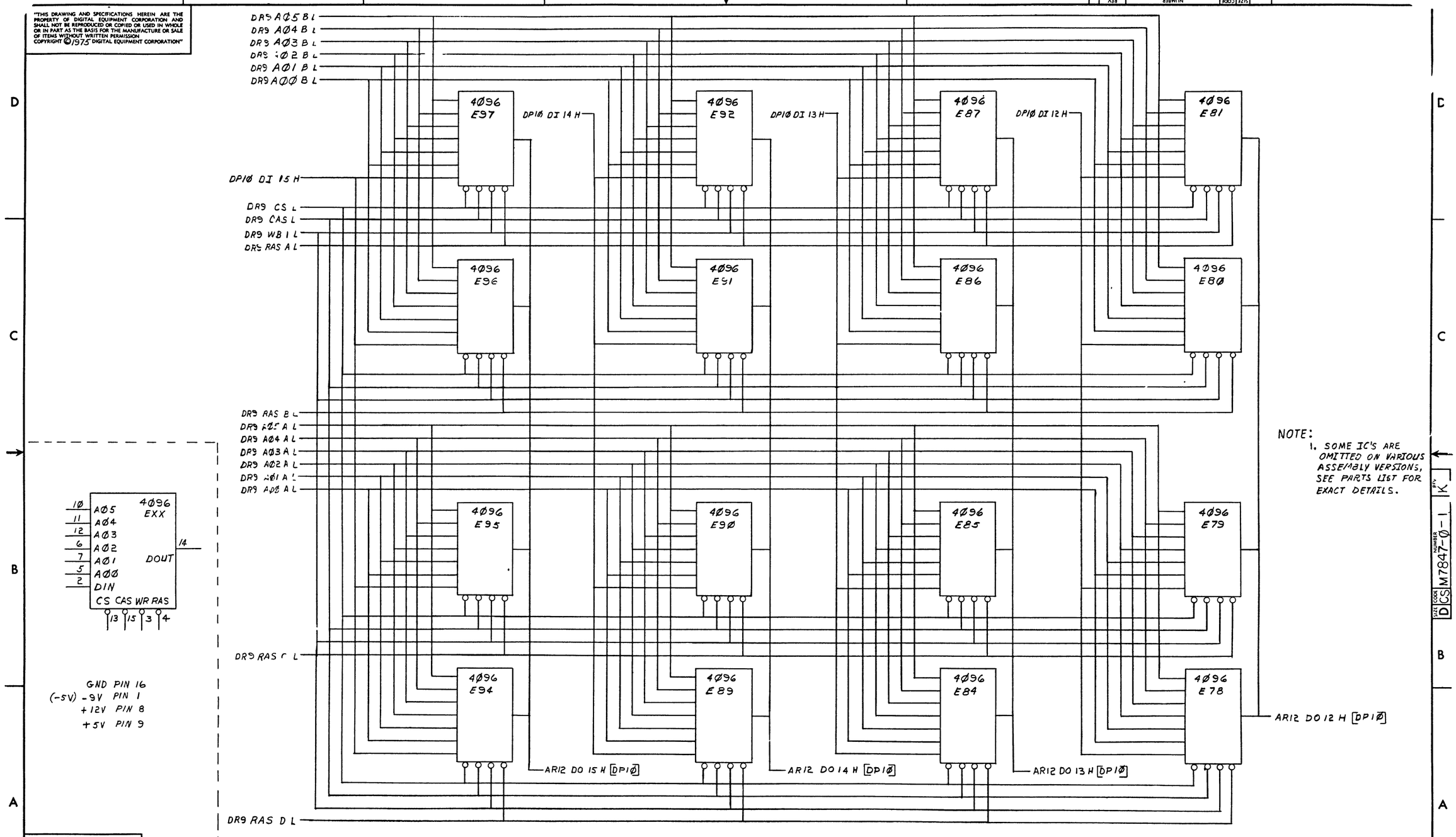

NOTE:
1. SOME IC'S ARE OMITTED ON VARIOUS ASSEMBLY VERSIONS, SEE PARTS LIST FOR EXACT DETAILS.

(ARRAY)

REVISIONS		
CHK	CHANGE NO	REV

TITLE	SIZE	CODE	NUMBER	REV.
UNIBUS MOS MEMORY (AR12)	D	CS	M7847-0-1	K
SCALE —	SHEET 12 OF 16	DIST.		

DEC FORM NO RHD 130

"THIS DRAWING AND SPECIFICATIONS, HEREIN, ARE THE PROPERTY OF DIGITAL EQUIPMENT CORPORATION AND SHALL NOT BE REPRODUCED OR COPIED OR USED IN WHOLE OR IN PART AS THE BASIS FOR THE MANUFACTURE OR SALE OF ITEMS WITHOUT WRITTEN PERMISSION.
COPYRIGHT © 1975 DIGITAL EQUIPMENT CORPORATION"

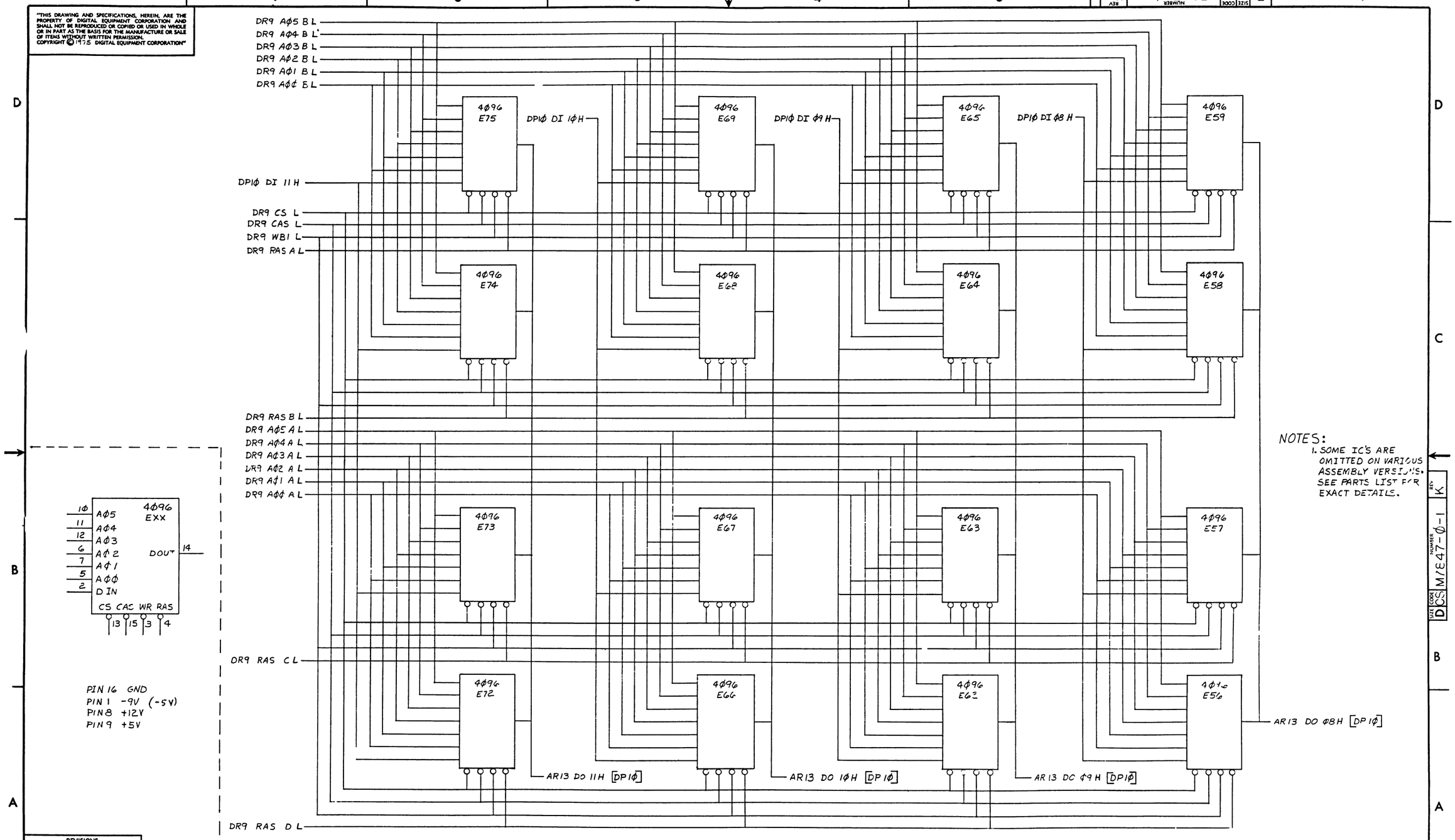

NOTES:
1. SOME IC'S ARE OMITTED ON VARIOUS ASSEMBLY VERSIONS. SEE PARTS LIST F/R EXACT DETAILS.

REVISIONS		
CHK	CHANGE NO	REV

(ARRAY)

TITLE	SIZE	CODE	NUMBER	REV.
UNIBUS MOS MEMORY (AR13)	D	CS	M7847-Ø-1	K
SCALE —	SHEET 13 OF 16	DIST.		

DEC FORM NO D60 130

"THIS DRAWING AND SPECIFICATIONS, HEREIN, ARE THE PROPERTY OF DIGITAL EQUIPMENT CORPORATION AND SHALL NOT BE REPRODUCED OR COPIED OR USED IN WHOLE OR IN PART AS THE BASIS FOR THE MANUFACTURE OR SALE OF ITEMS WITHOUT WRITTEN PERMISSION
COPYRIGHT © 1975 DIGITAL EQUIPMENT CORPORATION"

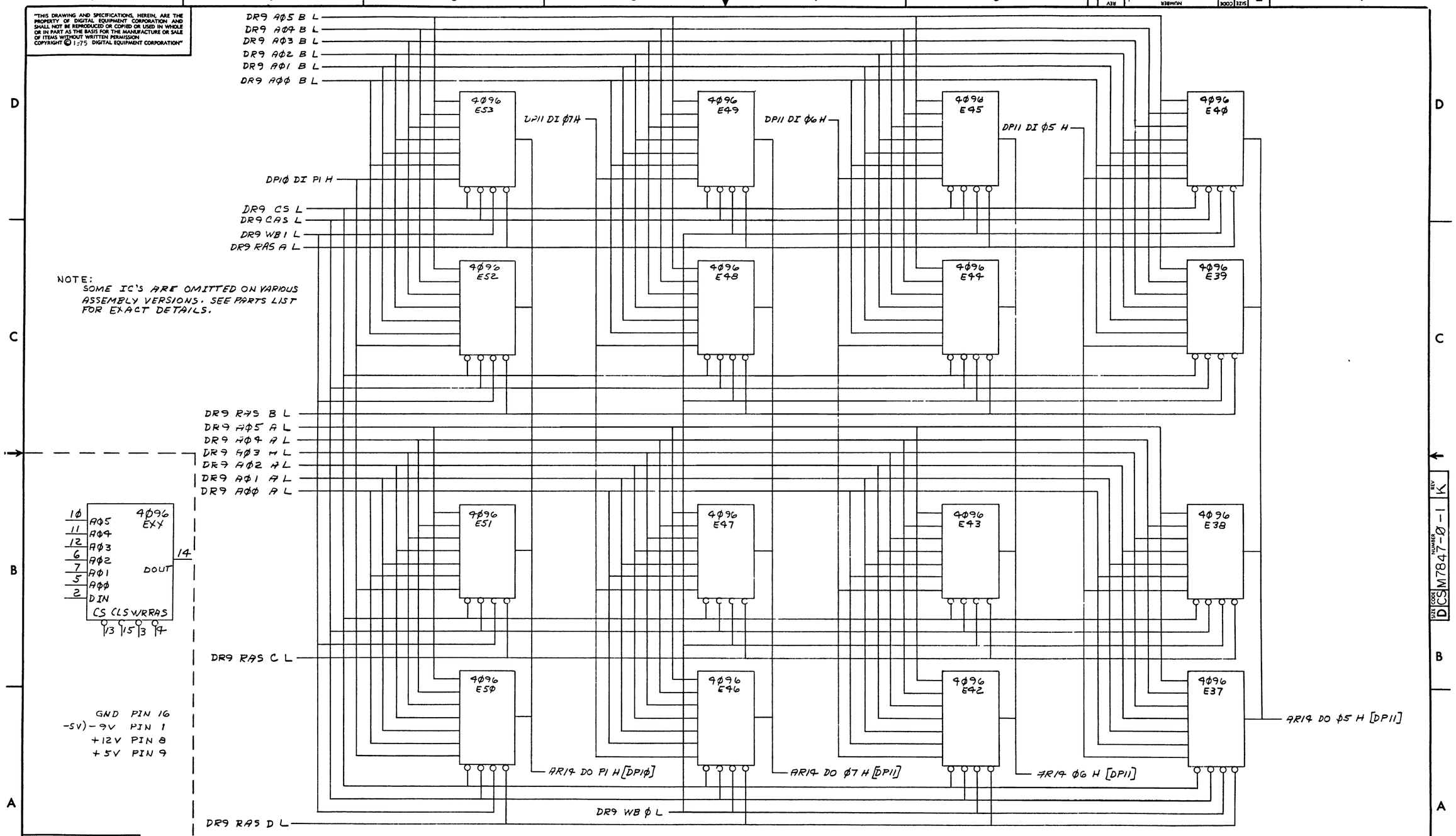

REVISIONS		
CHK	CHANGE NO	REV

(ARRAY)

TITLE	SIZE	CODE	NUMBER	REV.
UNIBUS MOS MEMORY (AR14)	D	CS	M7847-Ø-1	K
SCALE —	SHEET 14 OF 16		DIST.	

DEC FORM NO DNB 138

THIS DRAWING AND SPECIFICATIONS HEREIN ARE THE PROPERTY OF DIGITAL EQUIPMENT CORPORATION AND SHALL NOT BE REPRODUCED OR COPIED OR USED IN WHOLE OR IN PART AS THE BASIS FOR THE MANUFACTURE OR SALE OF ITEMS WITHOUT WRITTEN PERMISSION
COPYRIGHT © 1975 DIGITAL EQUIPMENT CORPORATION

NOTE: -
SOME IC'S ARE OMITTED ON VARIOUS ASSEMBLY VERSIONS. SEE PARTS LIST FOR EXACT DETAILS.

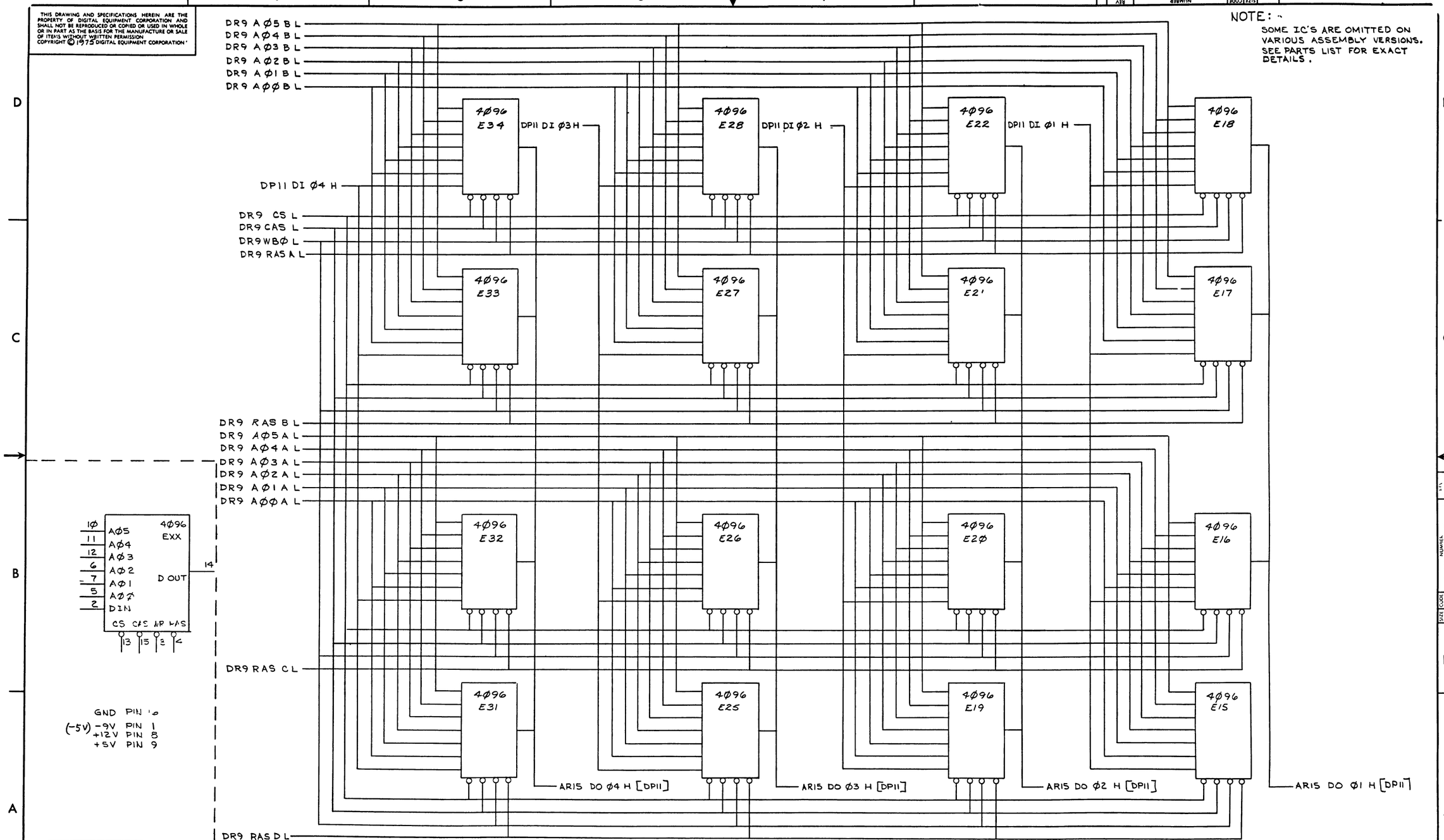

REVISIONS		
CHK	CHANGE NO	REV

(ARRAY)

TITLE	SIZE	CODE	NUMBER	REV.
UNIBUS MOS MEMORY (ARI5)	D	CS	M7847-Ø-1	K
SCALE — / —	SHEET 15 OF 16	DIST		

DEC FORM NO DRD 137

THIS DRAWING AND SPECIFICATIONS HEREIN ARE THE PROPERTY OF DIGITAL EQUIPMENT CORPORATION AND SHALL NOT BE REPRODUCED OR COPIED OR USED IN WHOLE OR IN PART AS THE BASIS FOR THE MANUFACTURE OR SALE OF ITEMS WITHOUT WRITTEN PERMISSION
COPYRIGHT © 1975 DIGITAL EQUIPMENT CORPORATION

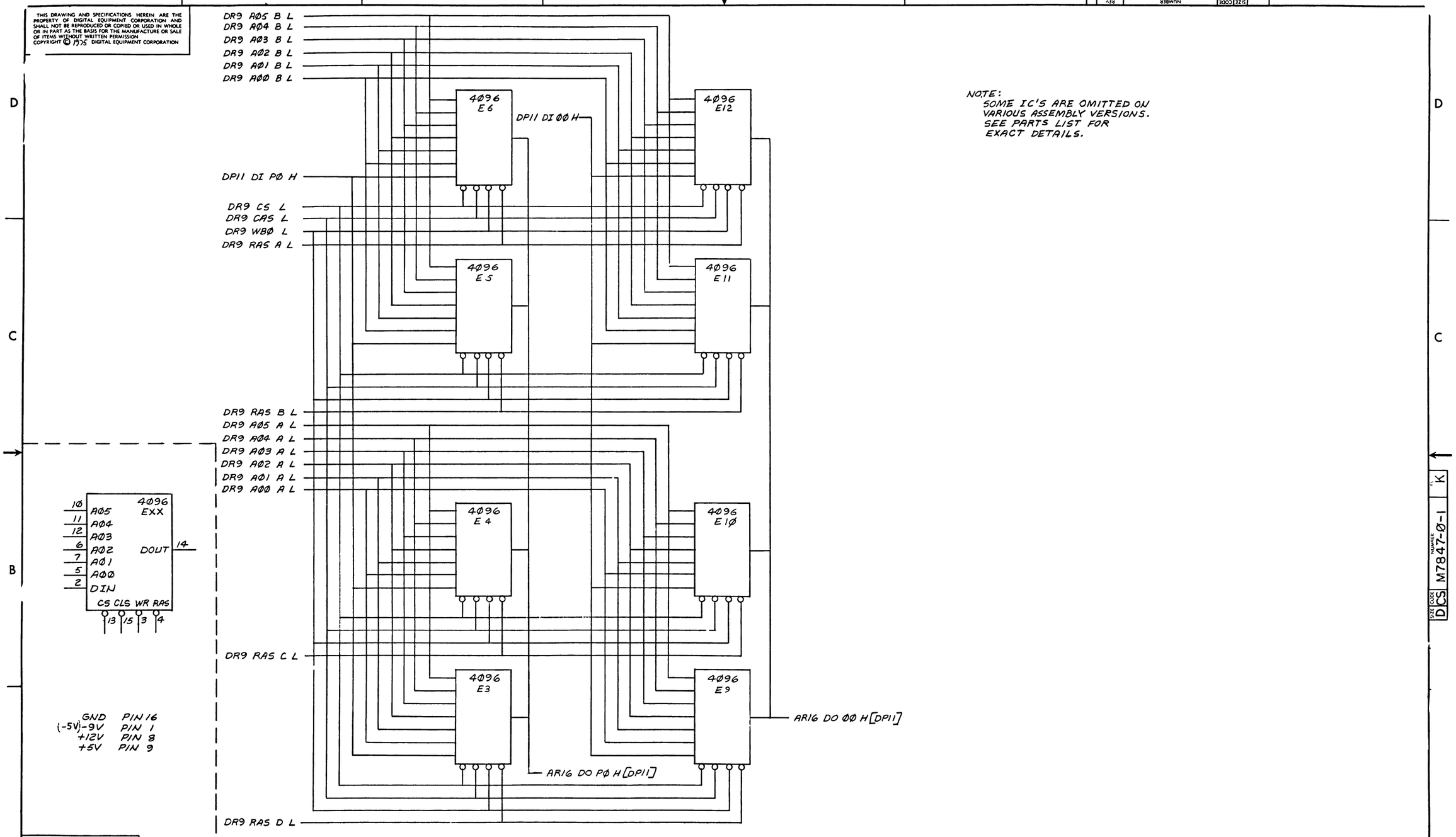

NOTE:
SOME IC'S ARE OMITTED ON VARIOUS ASSEMBLY VERSIONS. SEE PARTS LIST FOR EXACT DETAILS.

REVISIONS		
CHK	CHANGE NO	REV

(ARRAY)

TITLE	SIZE	CODE	NUMBER	REV.
UNIBUS MOS MEMORY (AR16)	D	CS	M7847-0-1	K
SCALE — / —	SHEET 16 OF 16	DIST		

BLANK

THE MATERIAL HEREIN IS FOR INFORMATION PURPOSES ONLY AND IS SUBJECT TO CHANGE WITHOUT NOTICE. DIGITAL EQUIPMENT CORPORATION ASSUMES NO RESPONSIBILITY FOR ANY ERRORS WHICH MAY APPEAR HEREIN."

FIELD MAINTENANCE PRINT SET

THIS DRAWING AND SPECIFICATIONS HEREIN ARE THE PROPERTY OF DIGITAL EQUIPMENT CORPORATION AND SHALL NOT BE REPRODUCED OR COPIED OR USED IN WHOLE OR IN PART AS THE BASIS FOR THE MANUFACTURE OR SALE OF ITEMS WITHOUT WRITTEN PERMISSION. COPYRIGHT © 1975 DIGITAL EQUIPMENT CORPORATION

B-TC-MM11-DP-3

TABLE OF CONTENTS

MM11-DP PRINT SET
TABLE OF CONTENTS

D-DD-MM11-DP	DRAWING DIRECTORY
D-CS-G652-Ø-1	16K X 18 BIT CORE MEMORY
D-TD-MM11-DP-2	TIMING DIAGRAM
D-UA-MM11-DP-Ø	MM11-DP MEMORY MODULE ASSY
B-DD-H222-Ø	DRAWING DIRECTORY
D-CS-5411554-Ø-1	H222 STACK BOARD
D-UA-H222-A-Ø	H222 CORE MEMORY STACK ASSY
D-CS-M785Ø-0-1	PARITY CONTROLLER
D-UA-5411554-0-0	16K MEMORY STACK
A-PL-5411554-0-0	16K MEM STK PARTS LIST

UNIT VARIATIONS COVERED BY THIS PRINT SET
MM11-DP
MM11-L

MM11-DP

Field Maintenance Print Set

Digital Equipment Corporation

PRINT SET ORDER NO.
MP 00032

REVISIONS		
REV.	A	B
CHG. NO.	MM11DP-1	MM11DP-2
DATE	MAY-76	FEB-77

USED ON OPTION/MODEL

SHEET I OF 1

DRN.	W. LUFKIN	DATE 24/OCT/75
CHK'D		DATE 24/OCT/75
PROJ. ENG.		DATE 10/28/75
FIELD SERV.		DATE 10/29/75

digital

TITLE: MM11-DP MEMORY MODULE

SIZE	CODE	NUMBER	REV.
B	TC	MM11-DP-3	B

DIST.

EN 01124 16 NOV 76 (327)

DRB 124

BLANK

digital EQUIPMENT CORPORATION MAYNARD MASSACHUSETTS

DRAWING DIRECTORY

"THIS DRAWING AND SPECIFICATIONS, HEREIN, ARE THE PROPERTY OF DIGITAL EQUIPMENT CORPORATION AND SHALL NOT BE REPRODUCED OR COPIED OR USED IN WHOLE OR IN PART AS THE BASIS FOR THE MANUFACTURE OR SALE OF ITEMS WITHOUT WRITTEN PERMISSION. COPYRIGHT © 1975 , DIGITAL EQUIPMENT CORPORATION"

CUSTOMER PRINT SET INDEX

SEQUENCE

SEQUENCE

THIS IS PRINT SET

NOTE: FOR FIELD MAINTENANCE PRINT SET SEE:

B-TC-MM11-DP-3

UNIT VARIATIONS		PRINT SET
VAR	TITLE	
MM11-DP	16K X 18 BIT MEMORY/MODULE	
MM11-D	16K X 16 BIT MEMORY/MODULE	

REVISIONS		
DATE	CHG. NO.	REV
MAY-76	MM11DP-1	A
FEB-77	MM11DP-2	B

USED ON OPTION/MODEL

SHEET 1 OF 2

DRN. W LUFKIN	DATE 24/OCT/75	TITLE MM11-DP MEMORY MODULE
CHK'D. W Lufkin	DATE 24/OCT/75	
PROJ ENG. D Strachan	DATE 10/28/75	
PROD. K.A Hill	DATE 10/29/75	SIZE B · CODE DD · NUMBER MM11-DP · REV B
FIELD SERV. [illegible]	DATE 1/[illegible]/75	DIST

DEC 16-13251-1062-VA-R1972

DRB 106

ELECTRICAL

CUSTOMER PRINT SET	MFG. SET	FIND NO.	DRAWING NO.	REV	NO OF SHT	DESCRIPTION	OPTION NO./FILE DATE
			B-TC-MM11-DP -3	#		MM11-DP FIELD MAINT. PRINT SET	
			MPØØØ32			MM11-DP PRINT SET	
			B-DD-MM11-DP			MM11-DP DRAWING DIRECTORY	
			D-TD-MM11-DP-2		2	MM11-DP TIMING DIAGRAM	
			D-CS-G652-Ø-1			16K X 18 BIT CORE MEMORY	

MECHANICAL

CUSTOMER PRINT SET	MFG SET	FIND NO.	DRAWING NO.	REV	NO OF SHT	DESCRIPTION	OPTION NO./FILE DATE
			D-UA-MM11-DP-Ø		1	MM11-DP MEMORY MODULE ASSY	
			D-UA-H222-A-Ø		1	H222 MEMORY STACK ASSY	

CUSTOMER PRINT SET CODES

X = PRINT OF DOCUMENT INCLUDED IN PRINT SET
C = INCLUDES ALL PRINTS INDICATED ON DOCUMENT
S = CONFIDENTIAL AUTHORIZED SIGNATURE REQUIRED

TITLE		SIZE	CODE	NUMBER	REV
MM11-DP MEMORY MODULE	SHEET 2 OF 2	B	DD	MM11-DP	B

DRB 108

THIS DRAWING AND SPECIFICATIONS HEREIN ARE THE PROPERTY OF DIGITAL EQUIPMENT CORPORATION AND SHALL NOT BE REPRODUCED OR COPIED OR USED IN WHOLE OR IN PART AS THE BASIS FOR THE MANUFACTURE OR SALE OF ITEMS WITHOUT WRITTEN PERMISSION
COPYRIGHT © 1973 DIGITAL EQUIPMENT CORPORATION

BANK SELECTION

S.A. INTER LEAVED	S.A. NON-INTER LEAVED	EA41	W1	W2	W3	W4
—	Ø	16K	OUT	OUT	OUT	IN
—	8K	24K	OUT	OUT	IN	OUT
Ø	16K	32K	OUT	OUT	IN	IN
8K	24K	40K	OUT	IN	OUT	OUT
16K	32K	48K	OUT	IN	OUT	IN
24K	40K	56K	OUT	IN	IN	OUT
32K	48K	64K	OUT	IN	IN	IN
40K	56K	72K	IN	OUT	OUT	OUT
48K	64K	80K	IN	OUT	OUT	IN
56K	72K	88K	IN	OUT	IN	OUT
64K	80K	96K	IN	OUT	IN	IN
72K	88K	104K	IN	IN	OUT	OUT
80K	96K	112K	IN	IN	OUT	IN
88K	104K	120K	IN	IN	IN	OUT
96K	112K	124K	IN	IN	IN	IN

NOTES:

1. INTERLEAVE CONTROL IS ACHIEVED AS FOLLOWS:
   (A) NON-INTERLEAVED
   W5 WG OUT
   (B) INTERLEAVED
   W5 IN, WG OUT } ONE MEMORY
   W5 OUT, WG IN } THE OTHER MEMORY
   (C) ADDRESS JUMPERS FOR THE COMBINED INTERLEAVED MEMORY ARE NOT THE SAME AS FOR THE NON-INTERLEAVED CASE (W1 THRU W4 MUST BE CUT THE SAME FOR BOTH INTERLEAVED MEMORIES). SEE BANK SELECTION CHART AT LEFT FOR BOTH INTERLEAVED AND NON-INTERLEAVED CASES.
2. UNDER NORMAL CONDITIONS (W8 OUT) THE MEMORY WILL NOT RESPOND TO ADDRESSES BETWEEN 124K AND 128K, BECAUSE THESE ADDRESSES ARE RESERVED FOR PERIPHERAL DEVICES ON THE UNIBUS. FOR SPECIAL APPLICATIONS WHERE THE RANGE OF PERIPHERAL ADDRESSES IS MORE RESTRICTED THAN THIS 4K RANGE THE MEMORY CAN BE CONFIGURED TO INCLUDE THE ADDITIONAL UNIBUS ADDRESSES AS FOLLOWS:
   W8 IN, W7 OUT } 124K TO 126K
   W8 IN, W7 IN } 124K TO 127K
   NOTE THAT FOR SYSTEMS WITHOUT MEMORY MANAGEMENT THIS MEANS THE USEFUL VIRTUAL ADDRESS SPACE FOR MEMORY CAN BE EXTENDED FROM 28K TO 30K OR 31K, BY SACRIFICING SOME PERIPHERAL SPACE.
   CAUTION
   SOME DIGITAL SOFTWARE MAY NOT BE COMPATABLE WITH THE REDUCED PERIPHERAL ADDRESS SPACE. TO ASSURE COMPATIBILITY W8 MUST BE OUT.
3. SCHEMATIC FOR H222 MEMORY STACK IS SHOWN ON CS 5411554-0-1.
   NOTES CONTINUED ON SHEET 2

SPARES

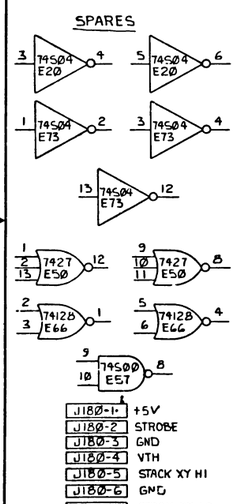

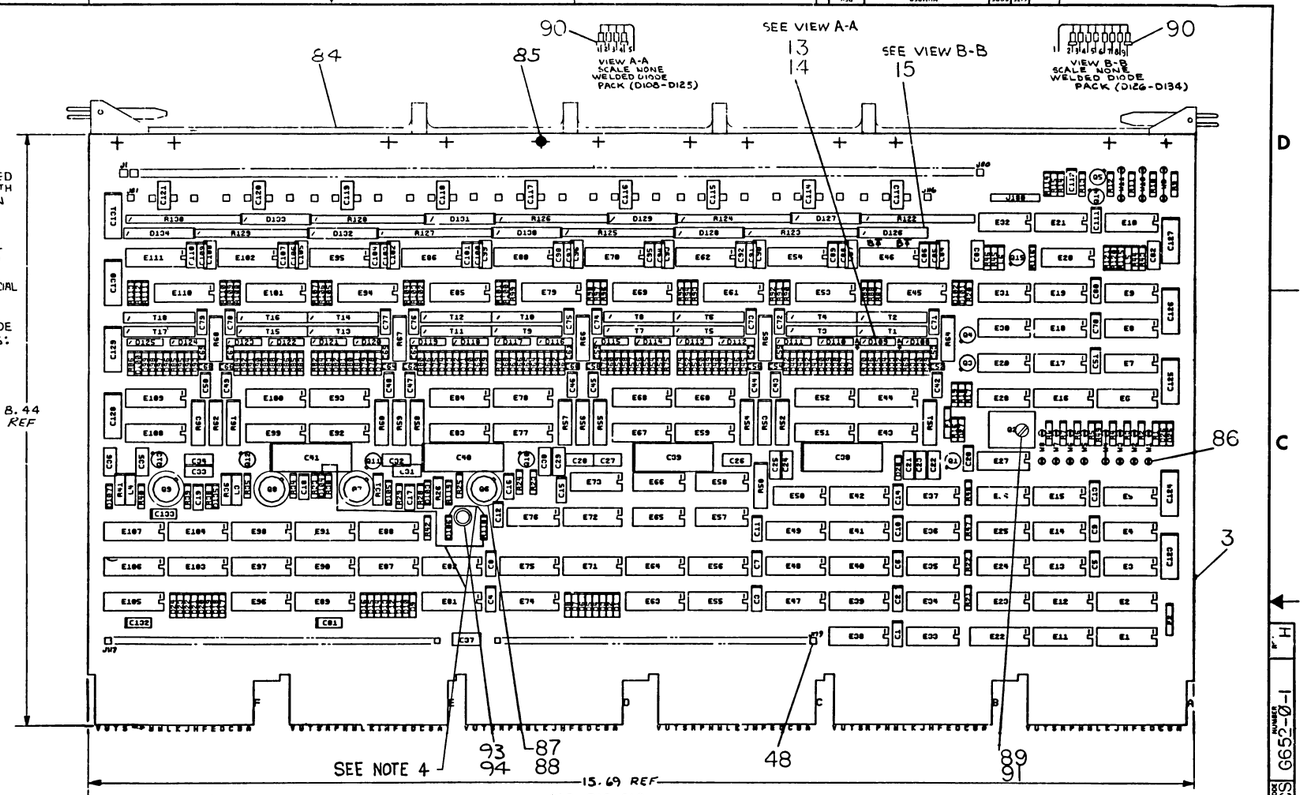

MEM9 BIT 16 E17 LOCK OUT	J78
BB2	J152 STACK XY
J180-T	J79 STACK XY LO
J180-5	J80 STACK XY HI
+20V	J153
+5V	J155
MEM1 X STACK CHG H	J149
MEM2 Y STACK CHG H	J150
CE1	J151 STACK V REF
GND J9	J60 GND
GND J26	J77 GND
GND J43	J154 GND

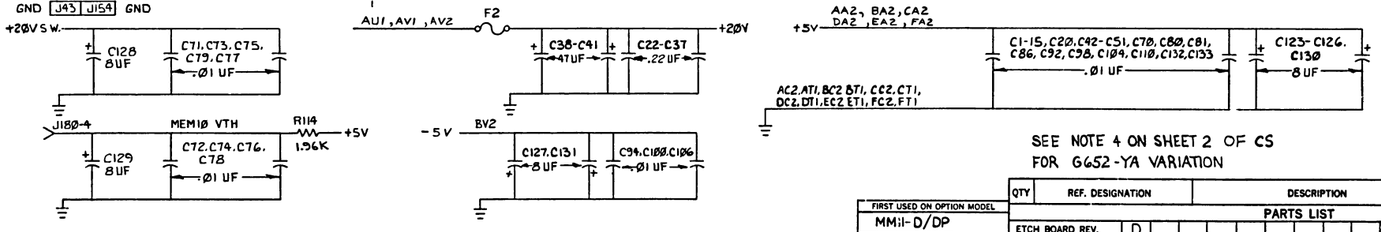

BUS GRANT LINES	
DK2	DL2
DM2	DN2
DP2	DR2
DS2	DT2

SEE NOTE 4 ON SHEET 2 OF CS FOR G652-YA VARIATION

8690	1	8	
8641	8	16	
75325	8	9	16
7520	9	10	
74157	8	16	
74153	8	16	
7483	12	5	
7475	12	5	
7442	8	16	
IC TYPE	GND	+5V	+20VSW

GND AND 5V ARE USUALLY PIN 7 AND 14 RESPECTIVELY EXCEPTIONS ARE STATED ABOVE

IC PIN LOCATIONS

REV	CHANGE NO	CHK
E	G652-00003	D. SMELSER 5/3/76
D	G652-00002	D. SMELSER 3/4/76
C	G652-00001	D. SMELSER 10-10-75
B	G652-00004	D. SMELSER 4 OCT 77
A	G652-00005	D. SMELSER 11-10-77

FIRST USED ON OPTION MODEL: MM11-D/DP

ETCH BOARD REV. D

QTY	REF. DESIGNATION	DESCRIPTION	PART NO.	ITEM NO

PARTS LIST

DEC NO.	EIA NO	DEC NO.	EIA NO.

SEMICONDUCTOR CONVERSION CHART

		DATE
DRN.	Robert Hopenwal	6-9-75
CHK'D	D. Smelser	7/31/75
ENG.	D. Smelser	7/31/75
PROJ. ENG.	D. Smelser	7/31/75
PROD.	R. A. Hill	7/31/75

NEXT HIGHER ASSY #

SCALE #

SHEET 1 OF 11

digital

TITLE 16K X 18 MEMORY ELECTRONICS

SIZE	CODE	NUMBER	REV.
D	CS	G652-0-1	H

DIST.

"THIS DRAWING AND SPECIFICATIONS HEREIN ARE THE PROPERTY OF DIGITAL EQUIPMENT CORPORATION AND SHALL NOT BE REPRODUCED OR COPIED OR USED IN WHOLE OR IN PART AS THE BASIS FOR THE MANUFACTURE OR SALE OF ITEMS WITHOUT WRITTEN PERMISSION. COPYRIGHT © 1975 , DIGITAL EQUIPMENT CORPORATION"

PARTS LIST

QTY	QTY	REF. DESIGNATIONS	DESCRIPTION	PART NO.	ITEM NO
REF	REF		ASSY/DRILLING HOLE LAYOUT	D-AH-G652-0-5	1
REF	REF		MODULE ECO HISTORY	B-MH-G652-0-6	2
1	1		ETCHED CIRCUIT BOARD	5011492	3
2	2	C82,C83	CAPACITOR, 82 pf, 100V, 5%, DM	1000015-00	4
1	1	C111	CAPACITOR, 22 pf, 100V, 5%, DM	1005820-00	5
22	22	C16 THRU C19,C84,C87,C90,C93 C96,C99,C102,C105,C108,C113 THRU C121	CAPACITOR, 120 pf, 100V, 5%, DM	1000018-00	6
18	18	C52 THRU C69	CAPACITOR, 5600 pf, 50V, 10%, CER	1011740-00	7
4	4	C38 THRU C41	CAPACITOR, 47 uf, 30V, AL EL	1012219-00	8
60	60	C1 THRU C15,C20,C21,C42 THRU C51,C70 THRU C81,C86 C88,C89 C91,C92,C94,C95,C97,C98,C100 C101,C103,C104,C106,C107,C85, C109,C110,C112,C132,C133	CAPACITOR, .01 uf, 50V, 20%, CER	1001610-00	9
16	16	C22 THRU C37	CAPACITOR, .22 uf, 50V+80%, -20%, CER	1010274-00	10
9	9	C123 THRU C131	CAPACITOR, 8 uf, 25V, AL EL	1012084-01	11
1	1	D28	DIODE ZENER IN751A 5.1V, 5%	1110994-00	12
9	9	D109,D111,D113,D115,D117, D119,D121,D123,D125	DIODE PACK COMMON CATHODE	7010918-0 0	13
9	9	D108,D110,D112,D114,D116, D118,D120,D122,D124	DIODE PACK COMMON ANODE	7010918-0-1	14
9	9	D126 THRU D134	DIODE PACK COMMON CATHODE	7010918-0-2	15
105	105	D1 THRU D27,D29 THRU D104, D107, D135	DIODE D872	1105275-00	16
1	1	D106	DIODE ZENER IN4738A,8.2V, 5%,1W	1116698-00	17
1	1	D105	DIODE ZENER IN4742,12V, 5%,1W	1109502-02	18
18	18	R51 THRU R68	RESISTOR, 21, 3W, 1% WW	1311738-01	19
2	2	R16,R17	RESISTOR, 75, 1/4W, 5%	1302379-00	20
6	6	R25,R30,R35,R40,R43,R46	RESISTOR, 100, 1/4W, 5%	1300229-00	21
1	1	R50	RESISTOR, 220, 3W, 1%, WW	1312123-00	22
24	24	R23,R28,R33,R38,R87,R88,R91 THRU R94,R97 THRU R100,R103 THRU R108,R109 THRU R112, R115,R116	RESISTOR, 1K, 1/4W, 5%	1300385-00	23
1	1	R114	RESISTOR, 1.96K, 1/4W, 1%	1304833-00	24
1	1	R47	RESISTOR, 3.16K, 1/8W, 1%	1303045-00	25
1	1	R49	RESISTOR, 3.3K, 1/4W, 5%	1300439-00	26
1	1	R19	RESISTOR, 4.7K, 1/4W, 5%	1300447-00	27
1	1	R48	RESISTOR, 4.99K, 1/8W, 1%	1305324-00	28
9	9	R89,R90,R95,R96,R101,R102, R107,R108,R113	RESISTOR, 9.09K, 1/8W, 1%	1304855-00	29
16	16	R1 THRU R8,R18,R20,R21,R22, R24,R29,R34,R39	RESISTOR, 10K, 1/4W, 5%	1300479-00	30
2	2	R13,R14	RESISTOR, 14.7K, 1/8W, 1%	1302841-00	31
1	1	R10	RESISTOR, 27K, 1/4W, 5%	1305346-00	32
1	1	R9	RESISTOR, 56K, 1/4W, 5%	1302395-00	33
1	1	R15	RESISTOR, 120K, 1/4W, 5%	1300539-00	34
1	1	R11	RESISTOR, 15K, 1/4W, 5%	1300496-00	35
18	18	R69 THRU R86	RESISTOR, 150, 1/4W, 5%	1300250-00	36
3	3	R45,R44,R119	RESISTOR, 47, 1/4W, 5%	1300202-00	37
2	2	R120,R121	RESISTOR, 56, 1/4W, 5%	1302602-00	38
1	1	R31	RESISTOR, 13, 1W, 1% WW	1312466-03	39
~~—~~	~~1~~	~~R118~~	~~RESISTOR, 750, 1/4W, 5%~~	~~1301401-00~~	~~40~~
1	1	R42	RESISTOR, 30, 1/4W, 5%	1302751-00	41
1	1	R12	RESISTOR, 4.64K, 1/8W, 1%	1304856-00	42
1	1	R26	RESISTOR, 11, 1W WW	1312466-01	43
1	1	R36	RESISTOR, 12, 1W WW	1312466-02	44
9	9	R122 THRU R130	RESISTOR PACK, 100, 1/8W, 1%	1311741-00	45
1	1	F1	FUSE, PICO 1 AMPERE	1210929-02	46
1	1	F2	FUSE, PICO 5 AMPERE	1205747-00	47
G652-YA	G652				

PARTS LIST

QTY	QTY	REF. DESIGNATIONS	DESCRIPTION	PART NO.	ITEM NO
179	179	J1 THRU J179	RECEPTACLE, SINGLE	1211728-00	48
1	1	J180	CONNECTOR, 7 PIN	1212104-00	49
2	2	Q14,Q15	TRANSISTOR, 3009B	1503100-00	50
2	2	Q3,Q4	TRANSISTOR, 6534B	1503409-01	51
5	5	Q5, Q10 THRU Q13	TRANSISTOR, 4258	1505321-00	52
1	1	Q1	TRANSISTOR, 6531B	1509338-00	53
4	4	Q8 THRU Q9	TRANSISTOR, 3762	1509649-01	54
1	1	Q2	TRANSISTOR, MJE 3055	1510555-00	55
18	18	T1 THRU T18	TRANSFORMER, INHIBIT DUAL	1812118-00	56
2	2	L3,L4	INDUCTOR, 0.47 uh, 10%	1810999-00	57
2	2	L5,L6	INDUCTOR, 100 uh	1610662-00	58
2	2	E9,E31	DELAY LINE, 250 NS	1811243-00	59
2	2	E26,E37	I.C. DEC 7400	1905575-00	60
1	1	E76	I.C. DEC 7408	1910741-00	61
1	1	E50	I.C. DEC 7427	1910878-00	62
1	1	E7	I.C. DEC 7430	1905578-00	63
2	2	E32,E65	I.C. DEC 7437	1910091-00	64
5	5	E49,E64,E82,E88,E97	I.C. DEC 7442	1910046-00	65
4	4	E39 THRU E42	I.C. DEC 7475	1909050-00	66
1	1	E6	I.C. DEC 7483	1909932-00	67
1	1	E10	I.C. DEC 74121	1910230-00	68
3	3	E8,E30,E66	I.C. DEC 74128	1912068-00	69
1	1	E16	I.C. DEC 74153	1909937-00	70
1	1	E72	I.C. DEC 74157	1910855-00	71
1	1	E19	I.C. DEC 74H50	1909060-00	72
3	3	E18,E27,E57	I C. DEC 74S00	1910532-00	73
5	5	E3,E4,E13,E14,E23	I C DEC 74S03	1910533-00	74
6	6	E5,E15,E17,E20,E24,E73	I.C. DEC 74S04	1910534-00	75
1	1	E21	I.C. DEC 74S10	1910538-00	76
1	1	E28	I C. DEC 74S20	1910539-00	77
1	1	E58	I.C. DEC 74S74	1910544-00	78
18	18	E45,E46,E53,E54,E61,E62,E69 E70,E79,E80,E85,E86,E94,E95 E101,E102,E110,E111	I.C. DEC 7520	1911748-00	79
38	38	E43,E44,E47,E48,E51,E52,E55 E58,E59,E60,E63,E67,E68,E71 E74,E75,E77,E78,E81,E83,E84 E87,E89 THRU E93,E96,E98 THRU E100,E103 THRU E109	I.C. DEC 75325	1910960-00	80
5	5	E25,E33 THRU E36	I.C. DEC 8640	1911489-00	81
6	6	E1,E2,E11,E12,E22,E38	I.C. DEC 8641-1	1811579-01	82
1	1	E29	I.C. DEC 8885	1910849-00	83
1	1		HANDLE	1210711-02	84
12	12		EYELET (HANDLE)	9008732-00	85
22	22		EYELET (SPLIT LUGS)	9008735-00	86
4	4	(USE WITH Q8 THRU Q9)	HEAT SINK, RED	1210001-00	87
4	4	(USE WITH Q8 THRU Q9)	TRANSIPAD	9007201-00	88
1	1		SCREW PPH #4-40 x 3/8	9006011-01	89
54	54		DIODE ASSEMBLY SPACER	9107771-00	90
1	1		NUT, KEP #4-40	9006557-00	91
		(SEE NOTES AND CHART SHEET #1)	WIRE, #22 AWG (SOLID)	9007580-01	92
1	1		SPACER, THD, ROUND #4-40 X 3/8	9006968-00	93
1	1		SCREW, NYLON, BINDER HD #4-40 X 3/8	9006401-04	94
—	1	R118	RESISTOR 750 1/4W 5%	1301401-00	95
1	—	R118	RESISTOR 22 1/4W 5%	1301969-00	96
A/R	—		WIRE #30 AWG GRN	9105740-55	97
	1	R41	RESISTOR 11, 1W, 1%	1312466-01	98
1		R41	RESISTOR 12, 1W, 1%	1312466-02	99
G652-YA	G652				

NOTES:

4. G652-YA VARIATION:
   ETCH CUT #1 SIDE 1 BETWEEN BOTTOM OF R118 AND FEEDTHRU.
   ETCH CUT #2 SIDE 2 BETWEEN TOP OF R118 AND E76 PIN 10.
   ETCH CUT #3 SIDE 2 BETWEEN CATHODE OF D104 AND CATHODE OF D105.
   COMPONENT CHANGE, RESISTOR, R118 CHANGED FROM 750Ω TO 22Ω 1/4W 5%.
   RESISTOR, R41 CHANGED FROM 11Ω TO 12Ω 1W, 1%.
   JUMPER #1 FROM CATHODE OF D104 TO BOTTOM OF R118
   JUMPER #2 FROM CATHODE OF D106 TO TOP OF R118
   JUMPER WIRE PART # 30 AWG GRY 9105740-55
5. G652-YA WILL NOT OPERATE WITH H222-A'S & B'S
   G652 WILL NOT OPERATE WITH H222-YA'S & YB'S

TITLE	SIZE	CODE	NUMBER	REV.
16K X 18 MEMORY ELECTRONICS	D	CS	G652-0-1	H
SCALE —//— SHEET 2 OF 11	DIST.			

"THIS DRAWING AND SPECIFICATIONS HEREIN ARE THE PROPERTY OF DIGITAL EQUIPMENT CORPORATION AND SHALL NOT BE REPRODUCED OR COPIED OR USED IN WHOLE OR IN PART AS THE BASIS FOR THE MANUFACTURE OR SALE OF ITEMS WITHOUT WRITTEN PERMISSION COPYRIGHT © 1975 DIGITAL EQUIPMENT CORPORATION"

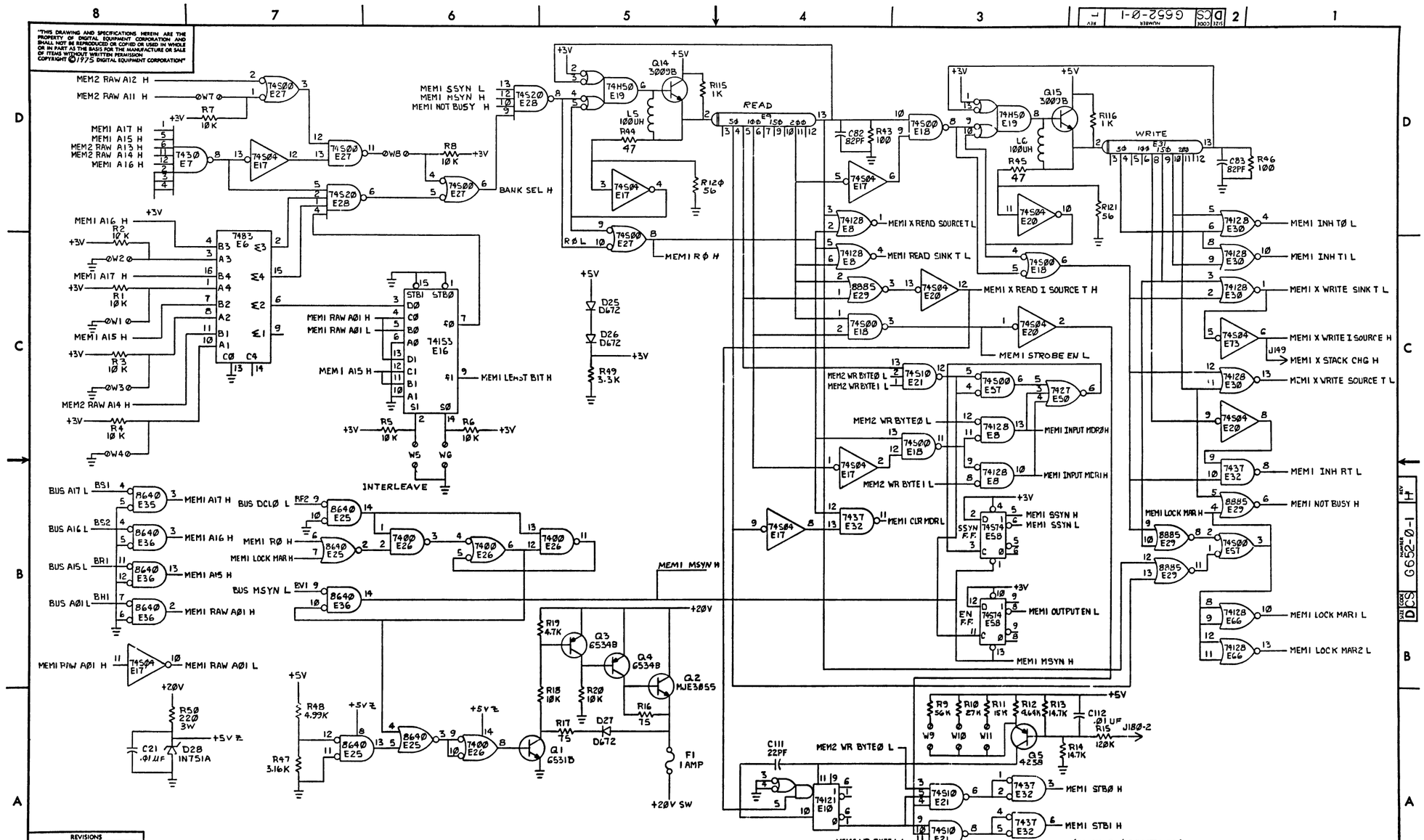

REVISIONS		
CHK	CHANGE NO	REV

TITLE 16K X18 MEMORY ELECTRONICS (MEM1)

SIZE D CODE CS NUMBER G652-0-1 REV. H

SCALE — SHEET 3 OF 11 DIST

DEC FORM NO DRD 138

"THIS DRAWING AND SPECIFICATIONS, HEREIN, ARE THE PROPERTY OF DIGITAL EQUIPMENT CORPORATION AND SHALL NOT BE REPRODUCED OR COPIED OR USED IN WHOLE OR IN PART AS THE BASIS FOR THE MANUFACTURE OR SALE OF ITEMS WITHOUT WRITTEN PERMISSION. COPYRIGHT © 1975 DIGITAL EQUIPMENT CORPORATION"

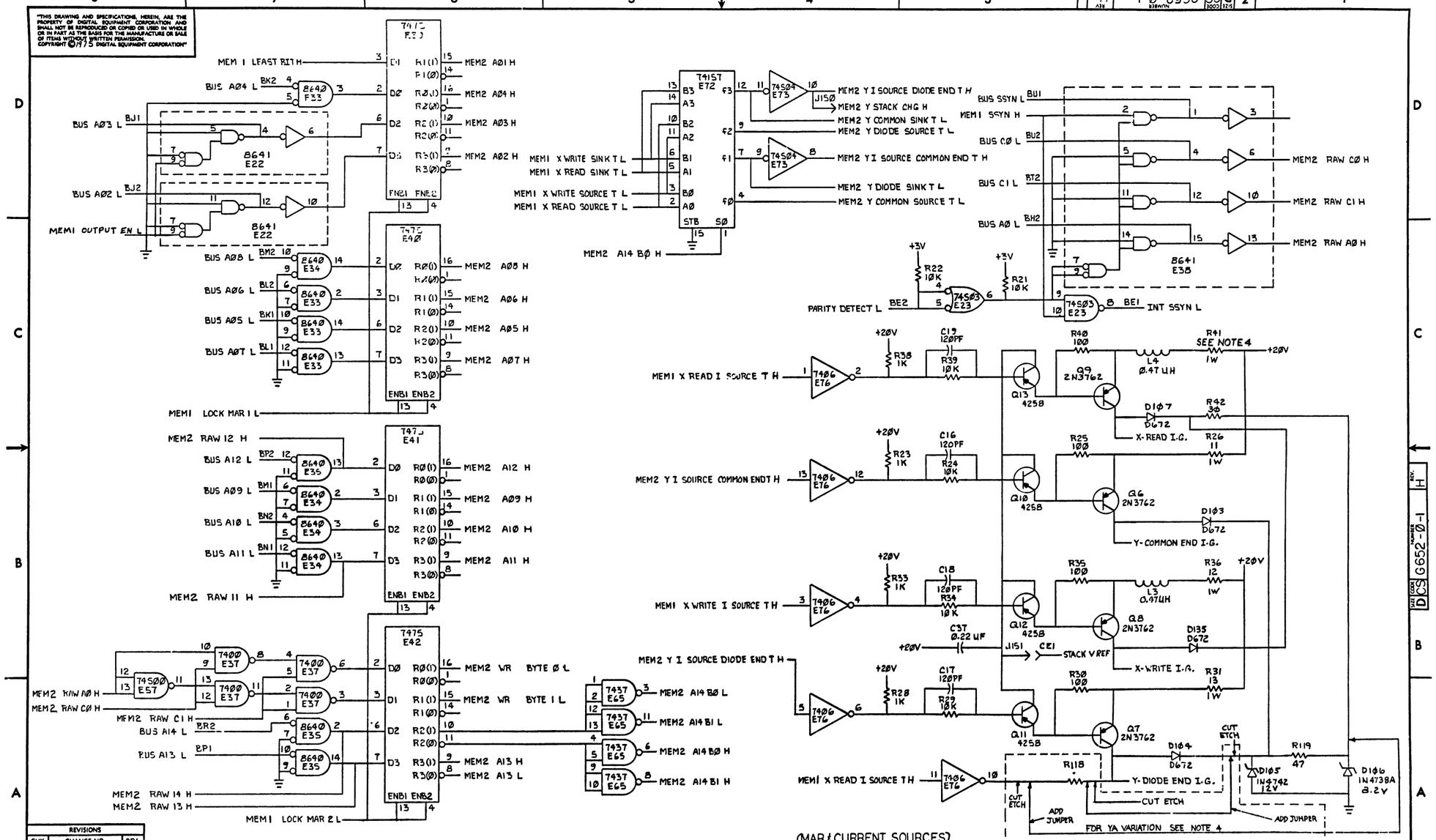

REVISIONS		
CHK	CHANGE NO.	REV.

TITLE	SIZE	CODE	NUMBER	REV.
16K x 18 MEMORY ELECTRONICS (MEM2)	D	CS	G652-0-1	H
SCALE — / —	SHEET 4 OF 11	DIST.		

DEC FORM NO. 940 150

"THIS DRAWING AND SPECIFICATIONS, HEREIN, ARE THE PROPERTY OF DIGITAL EQUIPMENT CORPORATION AND SHALL NOT BE REPRODUCED OR COPIED OR USED IN WHOLE OR IN PART AS THE BASIS FOR THE MANUFACTURE OR SALE OF ITEMS WITHOUT WRITTEN PERMISSION. COPYRIGHT © 1975 DIGITAL EQUIPMENT CORPORATION"

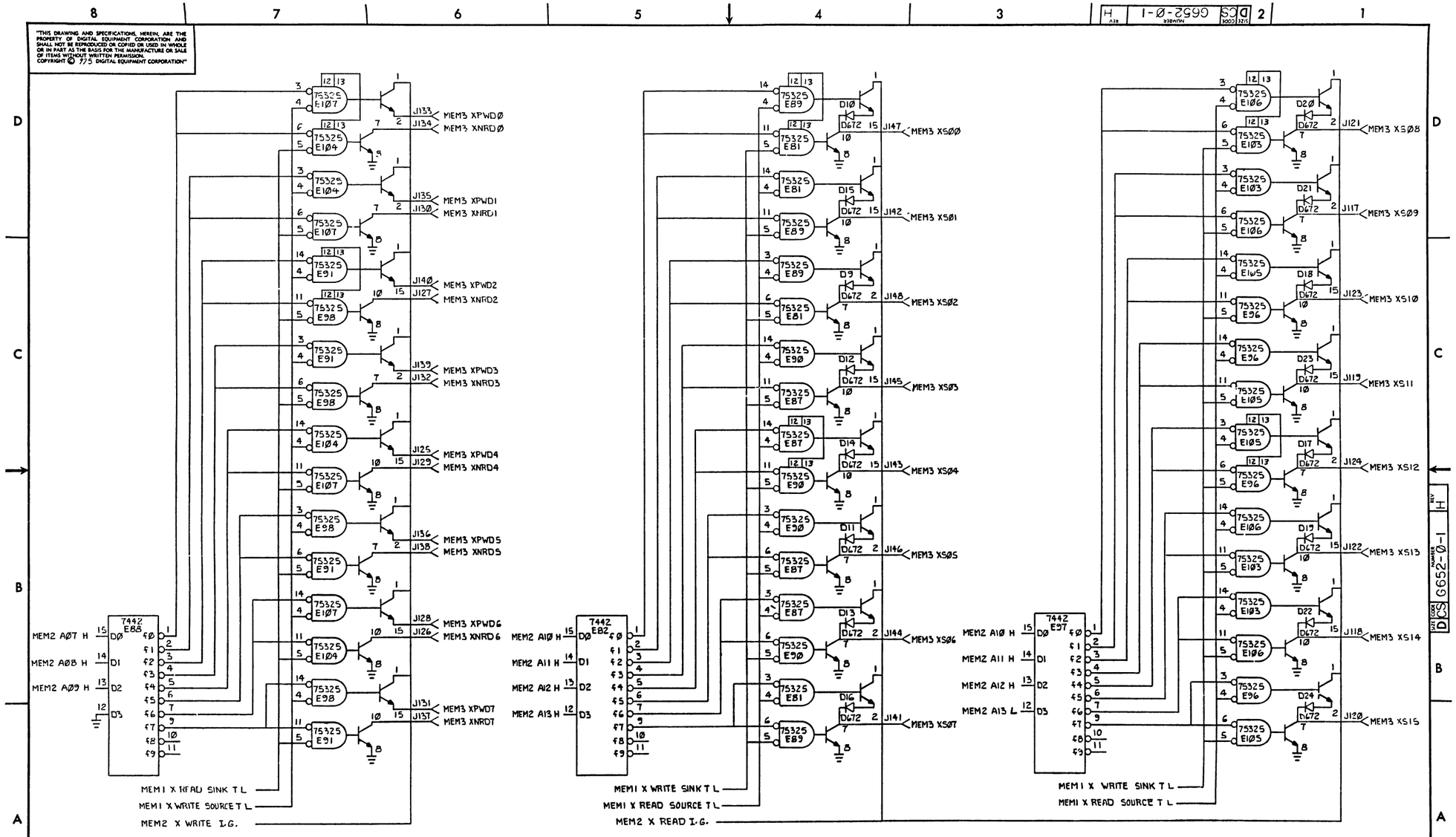

REVISIONS		
CHK	CHANGE NO	REV.

(X DRIVE)

TITLE	SIZE	CODE	NUMBER	REV.
16K x 18 MEMORY ELECTRONICS (MEM3)	D	CS	G652-0-1	H
SCALE —	SHEET 5 OF 11	DIST.		

DEC FORM NO. DRD 130

"THIS DRAWING AND SPECIFICATIONS, HEREIN, ARE THE PROPERTY OF DIGITAL EQUIPMENT CORPORATION AND SHALL NOT BE REPRODUCED OR COPIED OR USED IN WHOLE OR IN PART AS THE BASIS FOR THE MANUFACTURE OR SALE OF ITEMS WITHOUT WRITTEN PERMISSION COPYRIGHT © 1975 DIGITAL EQUIPMENT CORPORATION"

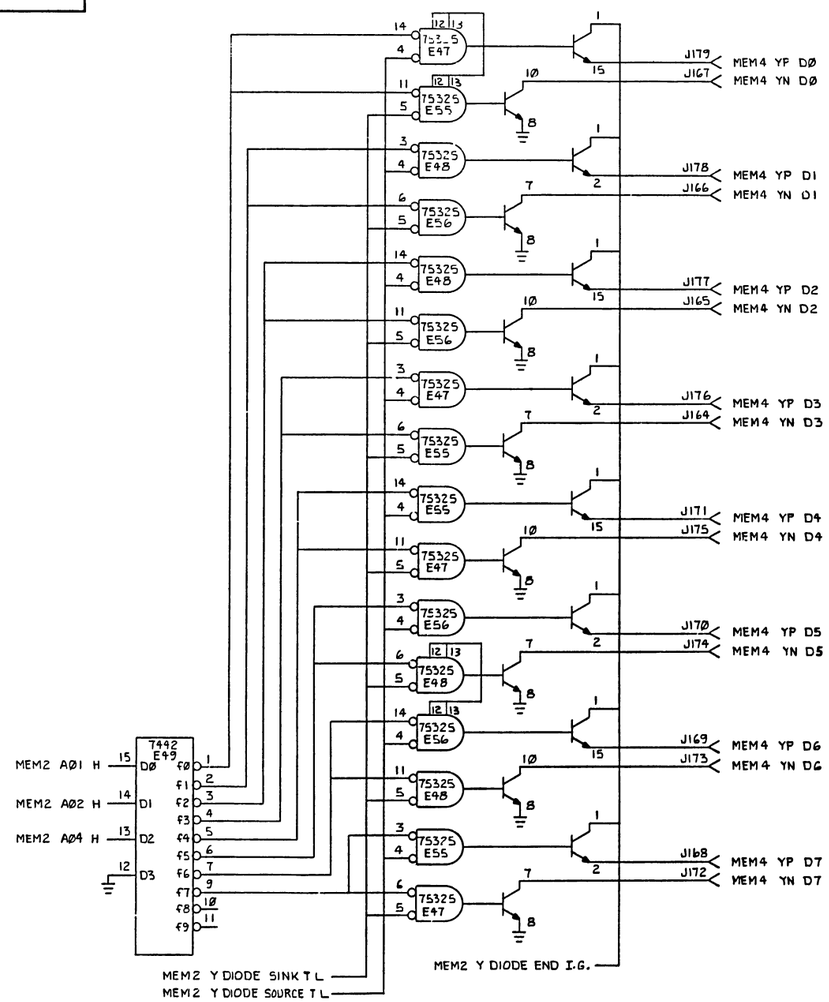

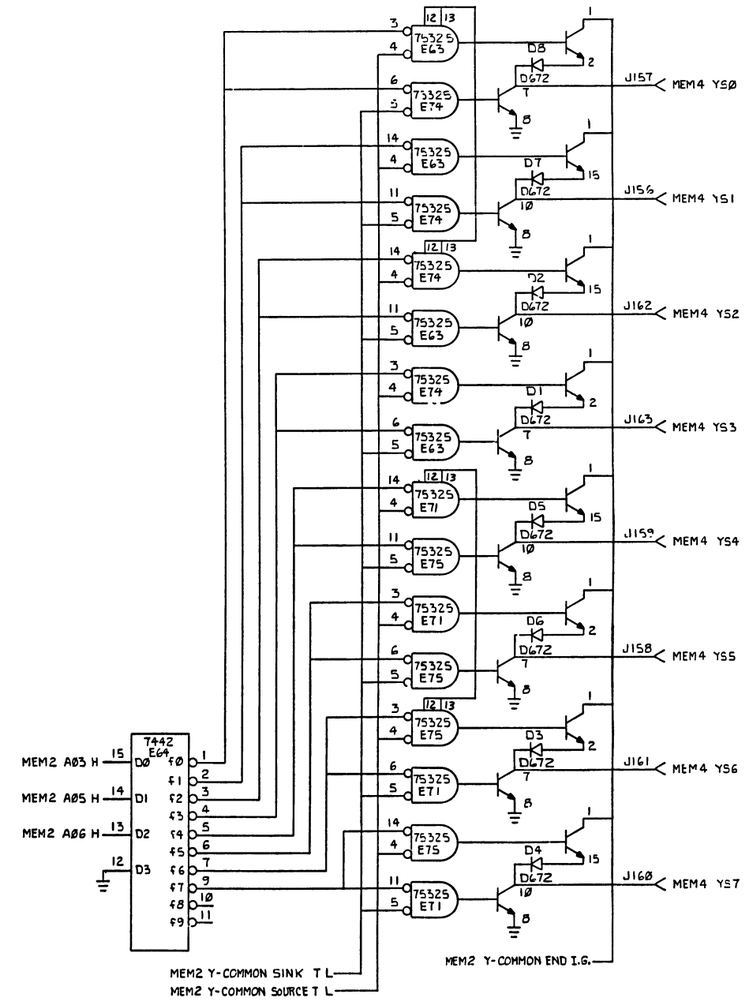

REVISIONS		
CHK	CHANGE NO.	REV.

(Y DRIVE)

TITLE 16K x 18 MEMORY ELECTRONICS (MEM4)

SIZE D CODE CS NUMBER G652-0-1 REV. H

SCALE — SHEET 6 OF 11 DIST.

DEC FORM NO D40 138

"THIS DRAWING AND SPECIFICATIONS HEREIN, ARE THE PROPERTY OF DIGITAL EQUIPMENT CORPORATION AND SHALL NOT BE REPRODUCED OR COPIED OR USED IN WHOLE OR IN PART AS THE BASIS FOR THE MANUFACTURE OR SALE OF ITEMS WITHOUT WRITTEN PERMISSION. COPYRIGHT © 1975 DIGITAL EQUIPMENT CORPORATION"

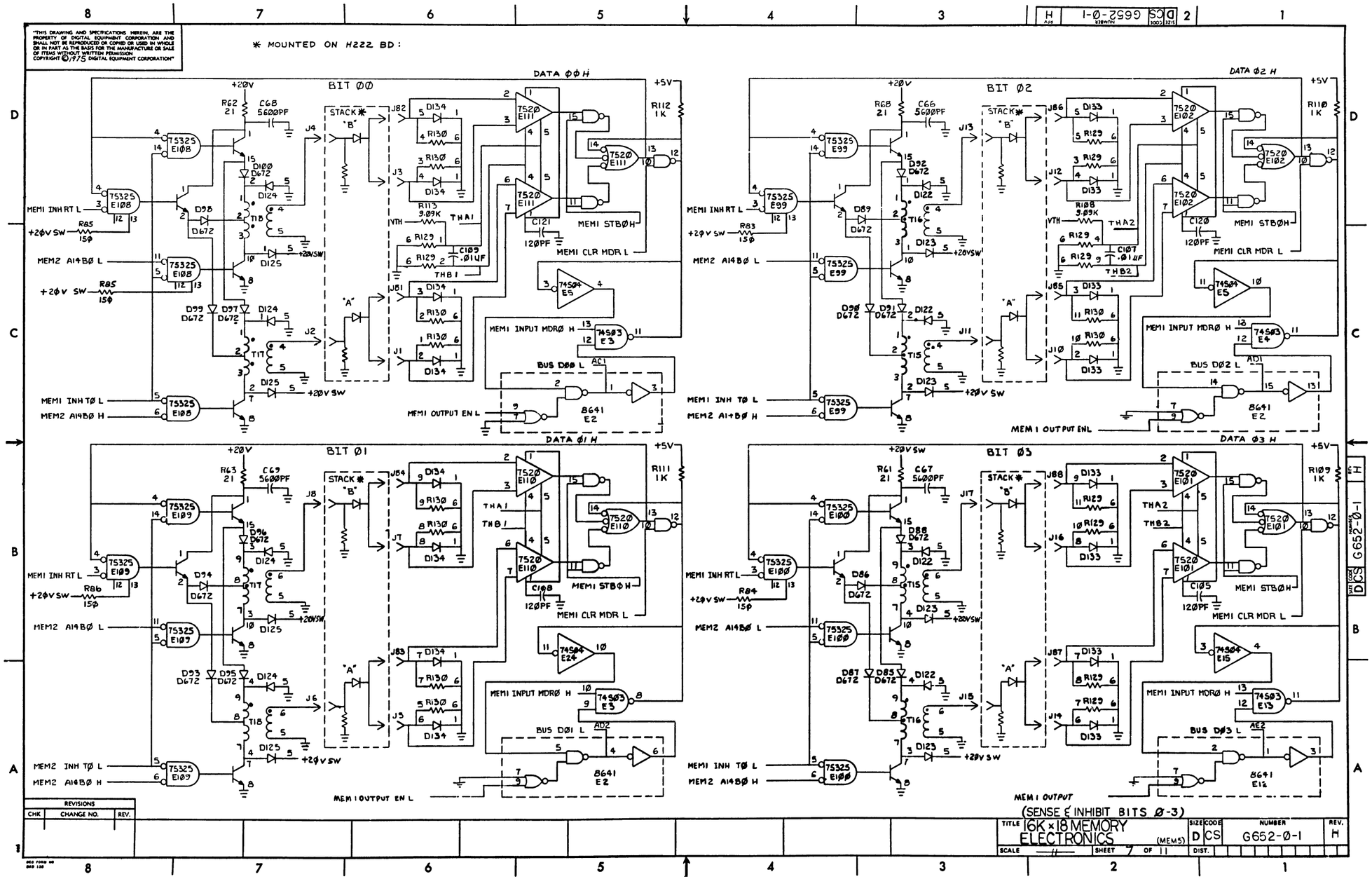

REVISIONS		
CHK	CHANGE NO.	REV.

TITLE	SIZE	CODE	NUMBER	REV.
16K×18 MEMORY ELECTRONICS (MEM5)	D	CS	G652-Ø-1	H
SCALE — SHEET 7 OF 11	DIST.			

"THIS DRAWING AND SPECIFICATIONS, HEREIN, ARE THE PROPERTY OF DIGITAL EQUIPMENT CORPORATION, AND SHALL NOT BE REPRODUCED OR COPIED OR USED IN WHOLE OR IN PART AS THE BASIS FOR THE MANUFACTURE OR SALE OF ITEMS WITHOUT WRITTEN PERMISSION. COPYRIGHT © 1975 DIGITAL EQUIPMENT CORPORATION"

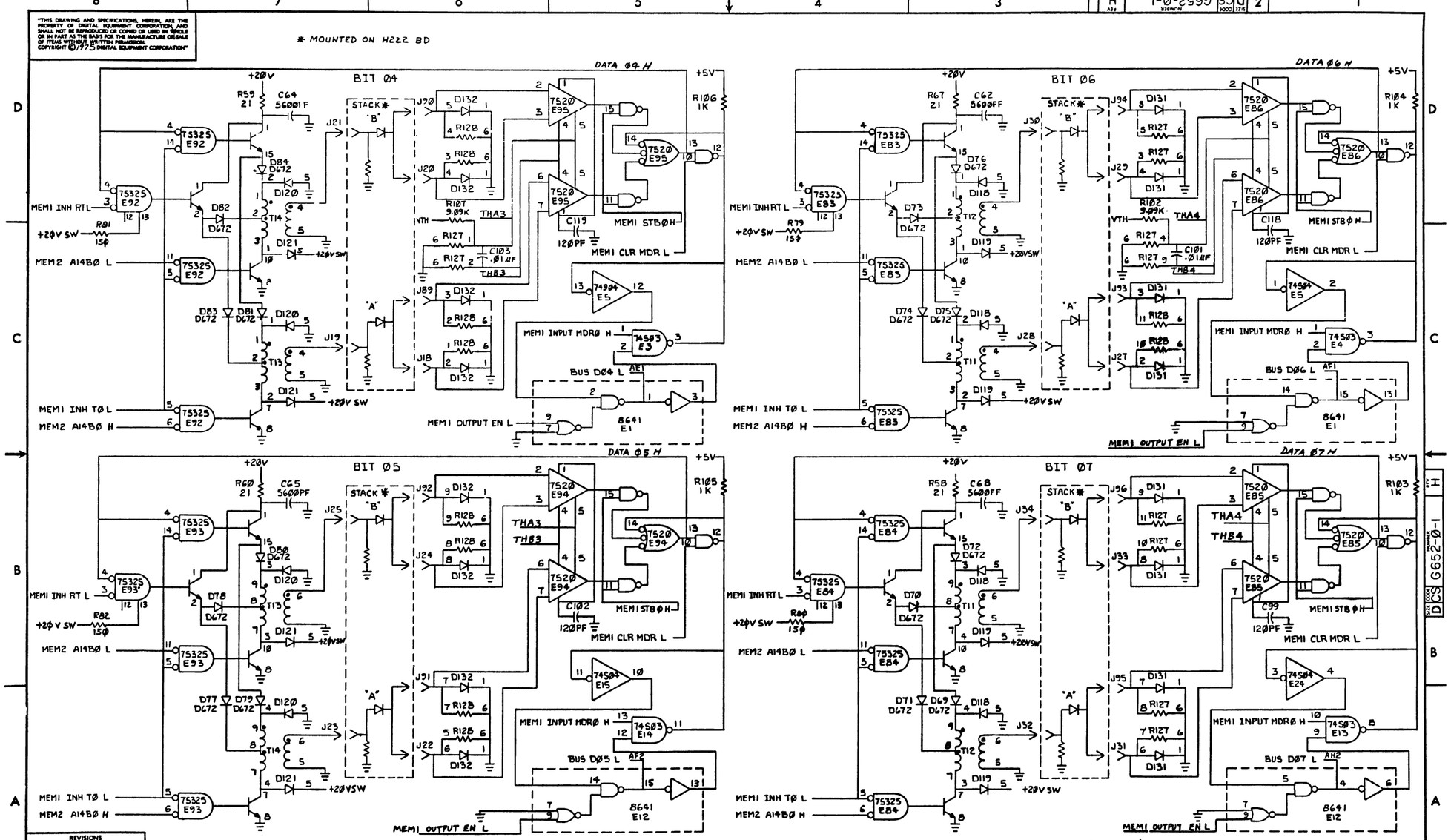

REVISIONS		
CHK	CHANGE NO.	REV

TITLE 16K×18 MEMORY ELECTRONICS (MEM6)

SIZE D CODE CS NUMBER G652-Ø-1 REV. H

SCALE — SHEET 8 OF 11 DIST.

"THIS DRAWING AND SPECIFICATIONS, HEREIN, ARE THE PROPERTY OF DIGITAL EQUIPMENT CORPORATION AND SHALL NOT BE REPRODUCED OR COPIED OR USED IN WHOLE OR IN PART AS THE BASIS FOR THE MANUFACTURE OR SALE OF ITEMS WITHOUT WRITTEN PERMISSION. COPYRIGHT © 1975 DIGITAL EQUIPMENT CORPORATION"

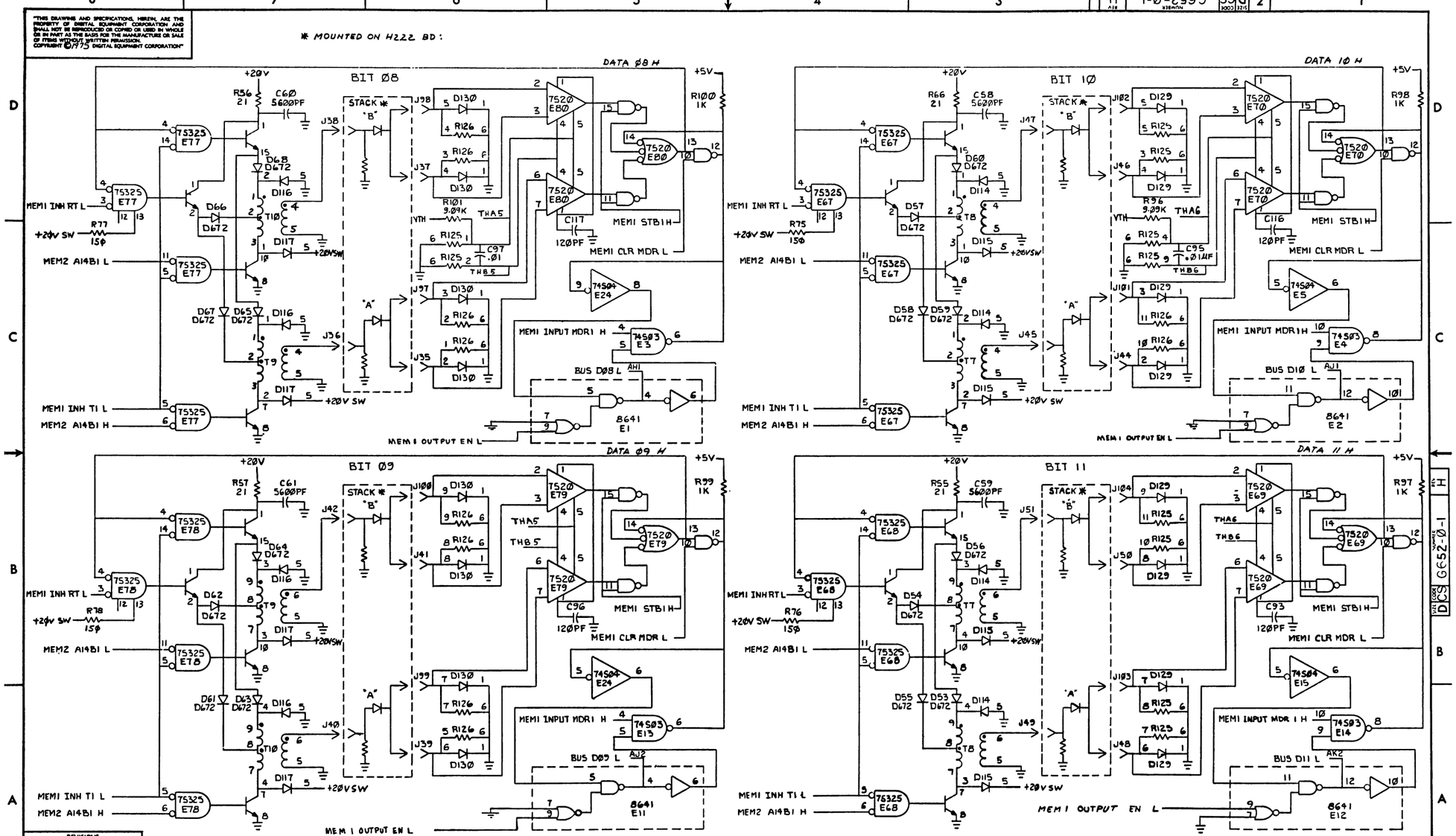

REVISIONS		
CHK	CHANGE NO.	REV

TITLE 16K x 18 MEMORY ELECTRONICS (MEM7)
SIZE D CODE CS NUMBER G652-Ø-1 REV. H
SCALE — SHEET 9 OF 11 DIST

"THIS DRAWING AND SPECIFICATIONS, HEREIN, ARE THE PROPERTY OF DIGITAL EQUIPMENT CORPORATION AND SHALL NOT BE REPRODUCED OR COPIED OR USED IN WHOLE OR IN PART AS THE BASIS FOR THE MANUFACTURE OR SALE OF ITEMS WITHOUT WRITTEN PERMISSION. COPYRIGHT © '73 DIGITAL EQUIPMENT CORPORATION"

* MOUNTED ON H222 BD

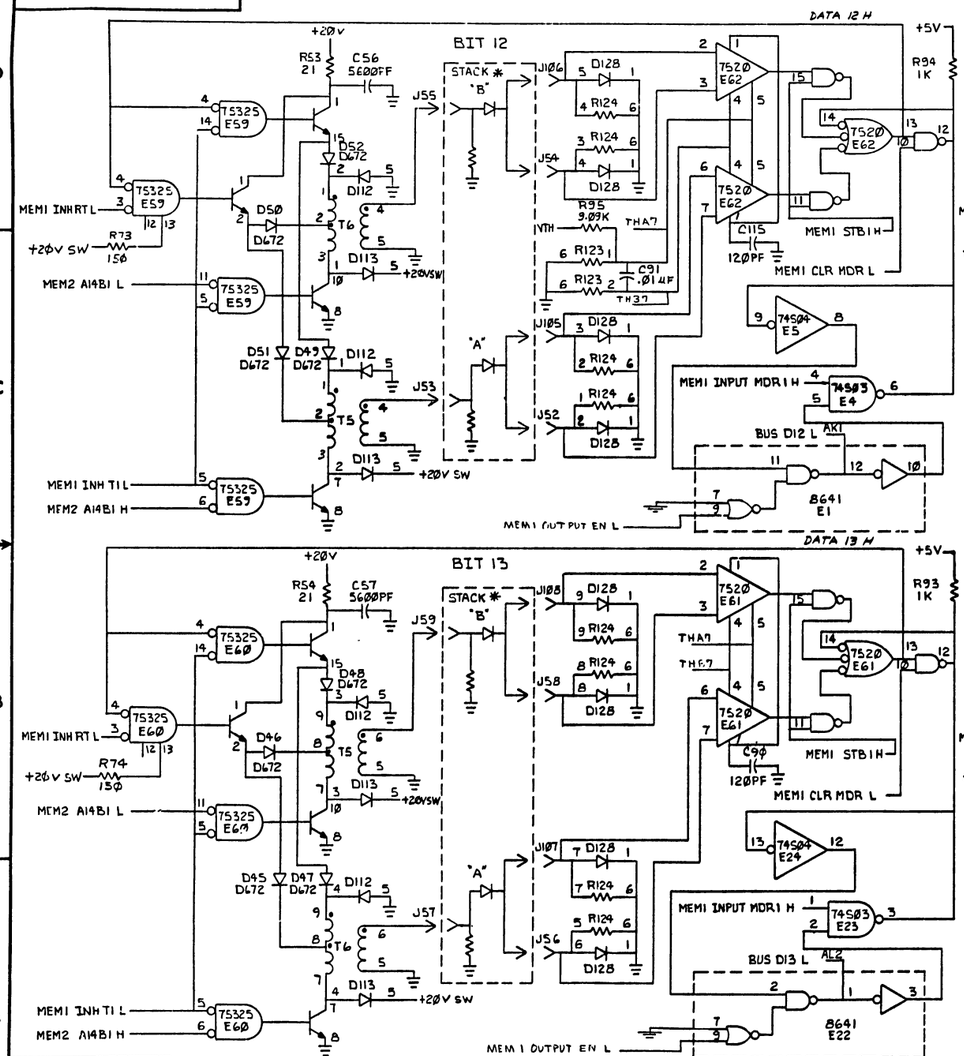

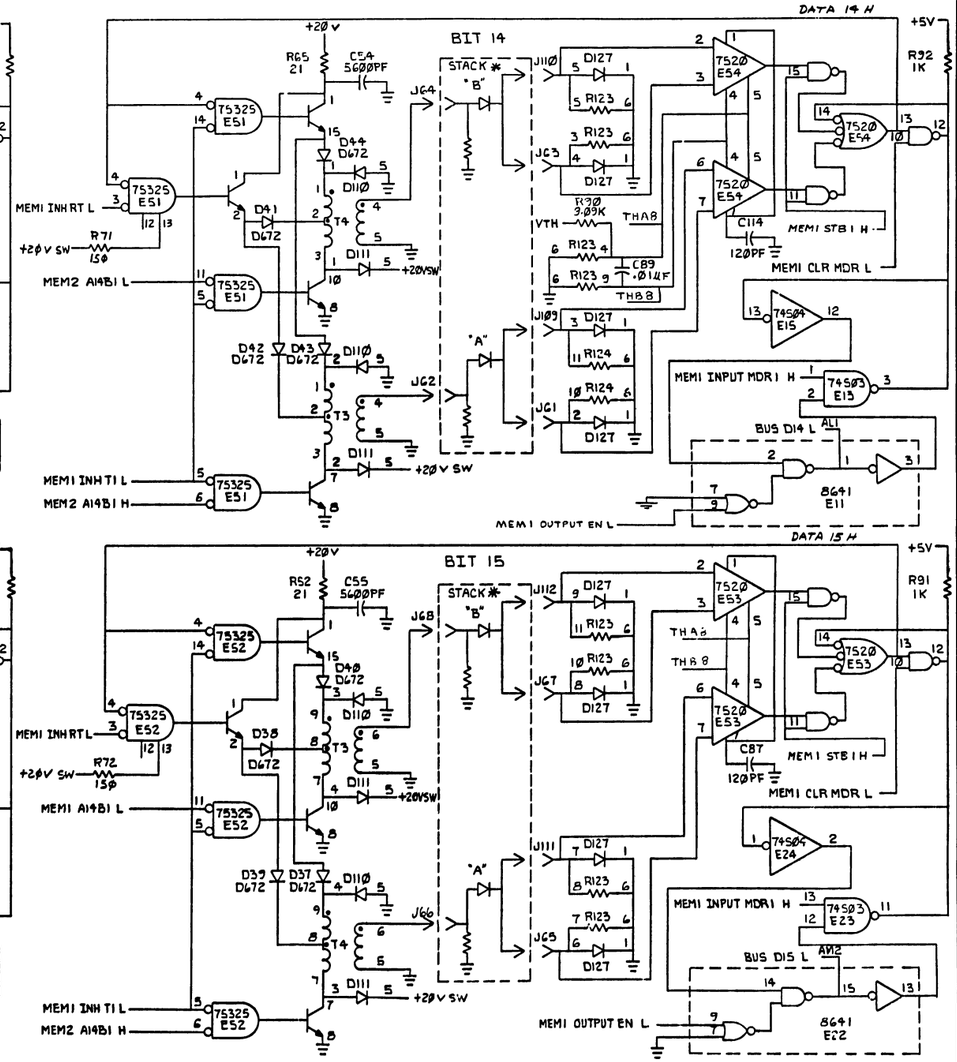

(SENSE & INHIBIT BITS 12-15)

REVISIONS		
CHK	CHANGE NO.	REV.

TITLE	SIZE	CODE	NUMBER	REV.
16K x 18 MEMORY ELECTRONICS (MEM18)	D	CS	G652-0-1	H
SCALE — / /	SHEET 10 OF 11	DIST.		

"THIS DRAWING AND SPECIFICATIONS, HEREIN, ARE THE PROPERTY OF DIGITAL EQUIPMENT CORPORATION AND SHALL NOT BE REPRODUCED OR COPIED OR USED IN WHOLE OR IN PART AS THE BASIS FOR THE MANUFACTURE OR SALE OF ITEMS WITHOUT WRITTEN PERMISSION. COPYRIGHT ©1975 DIGITAL EQUIPMENT CORPORATION"

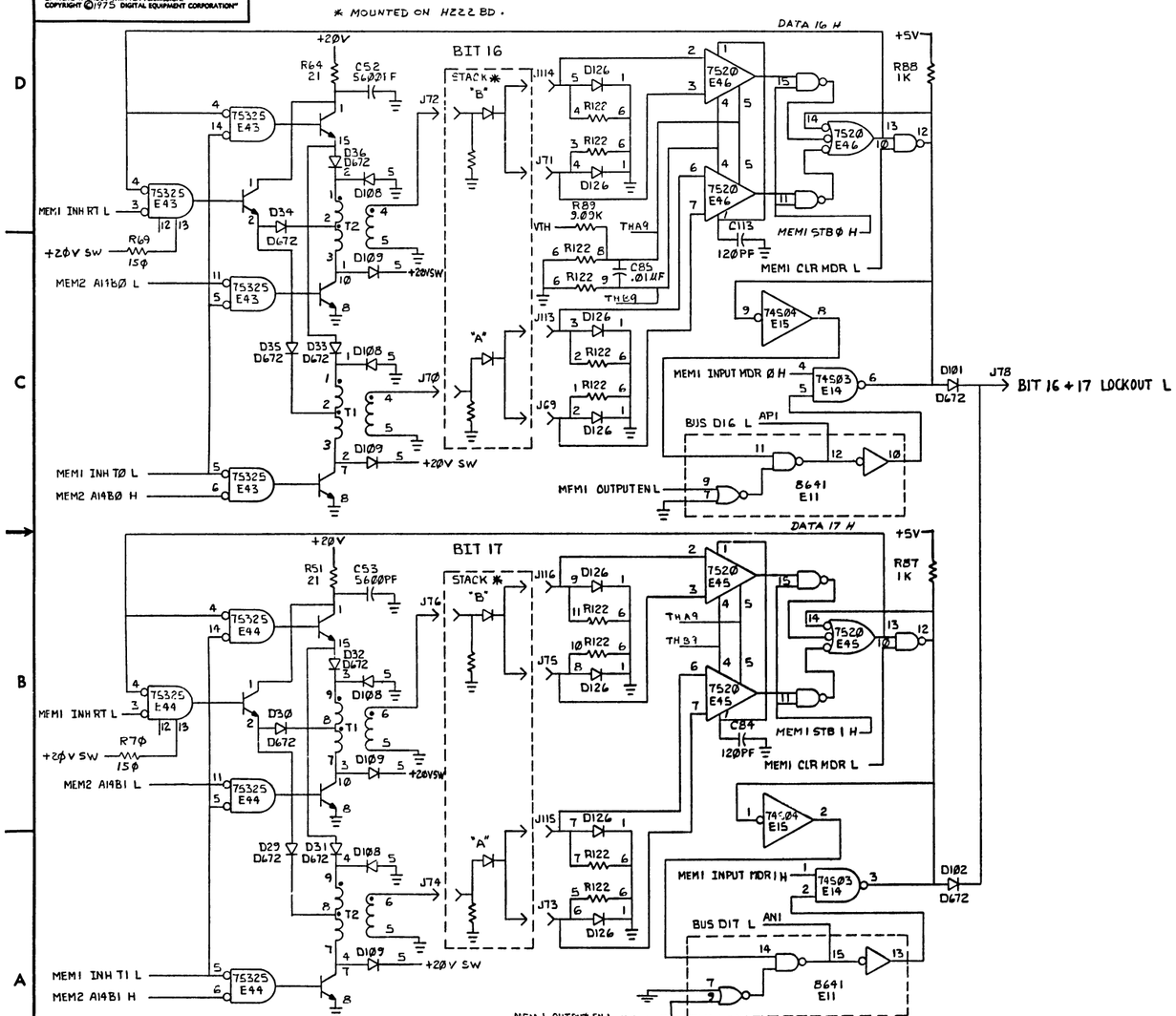

(SENSE & INHIBIT BITS 16 & 17)

REVISIONS		
CHK	CHANGE NO.	REV.

TITLE	SIZE	CODE	NUMBER	REV.
16K x 18 MEMORY ELECTRONICS (MEM9)	D	CS	G652-0-1	H
SCALE —//—	SHEET 1 OF 1	DIST.		

DEC FORM NO 2000 150

"THIS DRAWING AND SPECIFICATIONS, HEREIN, ARE THE PROPERTY OF DIGITAL EQUIPMENT CORPORATION AND SHALL NOT BE REPRODUCED OR COPIED OR USED IN WHOLE OR IN PART AS THE BASIS FOR THE MANUFACTURE OR SALE OF ITEMS WITHOUT WRITTEN PERMISSION COPYRIGHT © 1975, DIGITAL EQUIPMENT CORPORATION"

DAT O

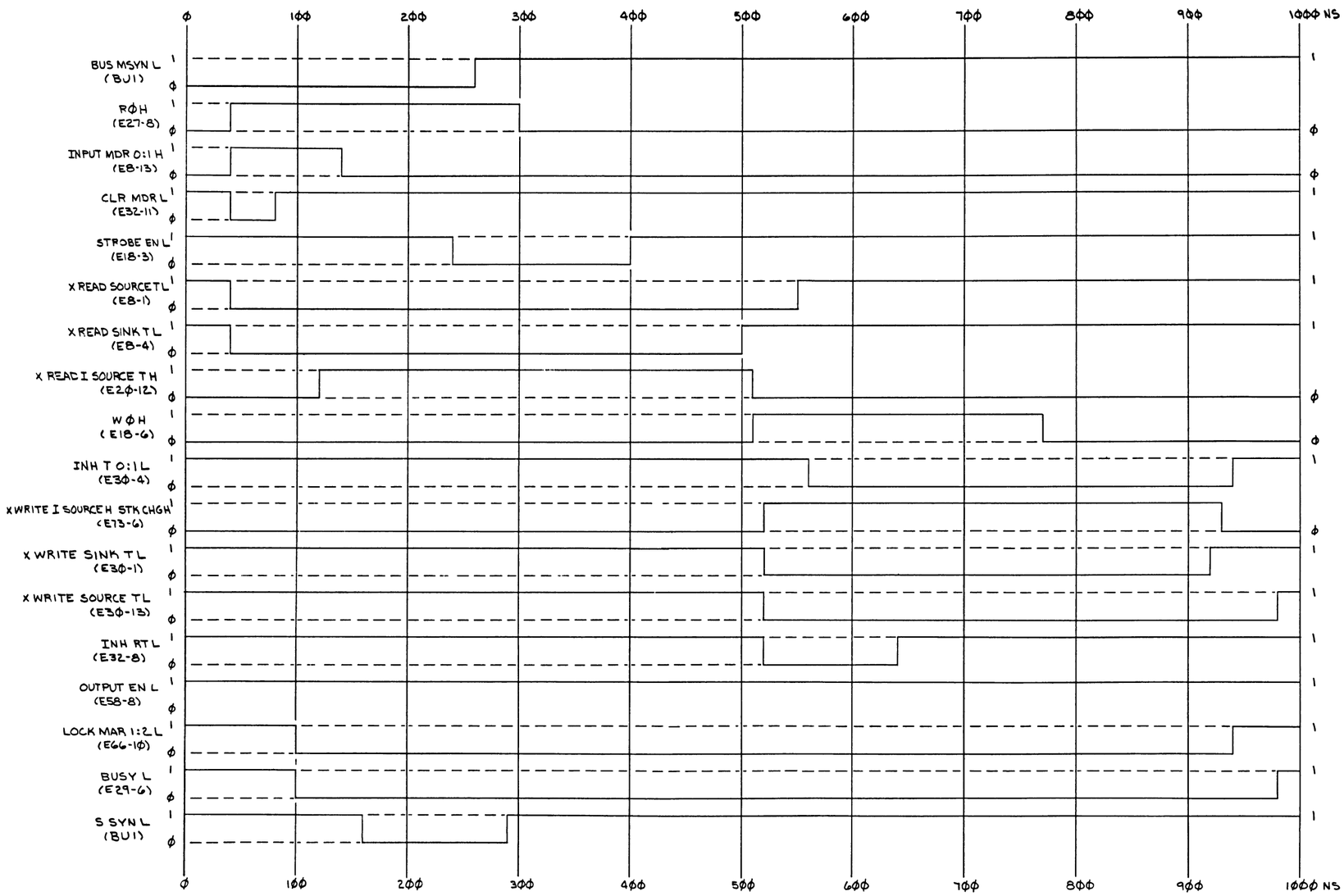

DRN W. LUFKIN	16 SEPT 1975	FIRST USED ON MMII-DP	digital
CHK'D	26 OCT 1975		
ENG	10/28/75	TITLE MMII-DP TIMING DIAGRAM	
PROJ ENG	10/28/75		
PROD RQ Hale	23 OCT 75		
NEXT HIGHER ASSY B-DD-MMII-DP		SIZE D / CODE TD / NUMBER MMII-DP-2	REV.
SCALE —			
SHEET 1 OF 2		DIST	

REVISIONS: CHK | CHANGE NO. | REV

DEC FORM NO. DRD 102 D

SIZE D CODE TD NUMBER MMII-DP-2 REV

"THIS DRAWING AND SPECIFICATIONS, HEREIN ARE THE PROPERTY OF DIGITAL EQUIPMENT CORPORATION AND SHALL NOT BE REPRODUCED OR COPIED OR USED IN WHOLE OR IN PART AS THE BASIS FOR THE MANUFACTURE OR SALE OF ITEMS WITHOUT WRITTEN PERMISSION
COPYRIGHT © 1975 DIGITAL EQUIPMENT CORPORATION"

DAT I

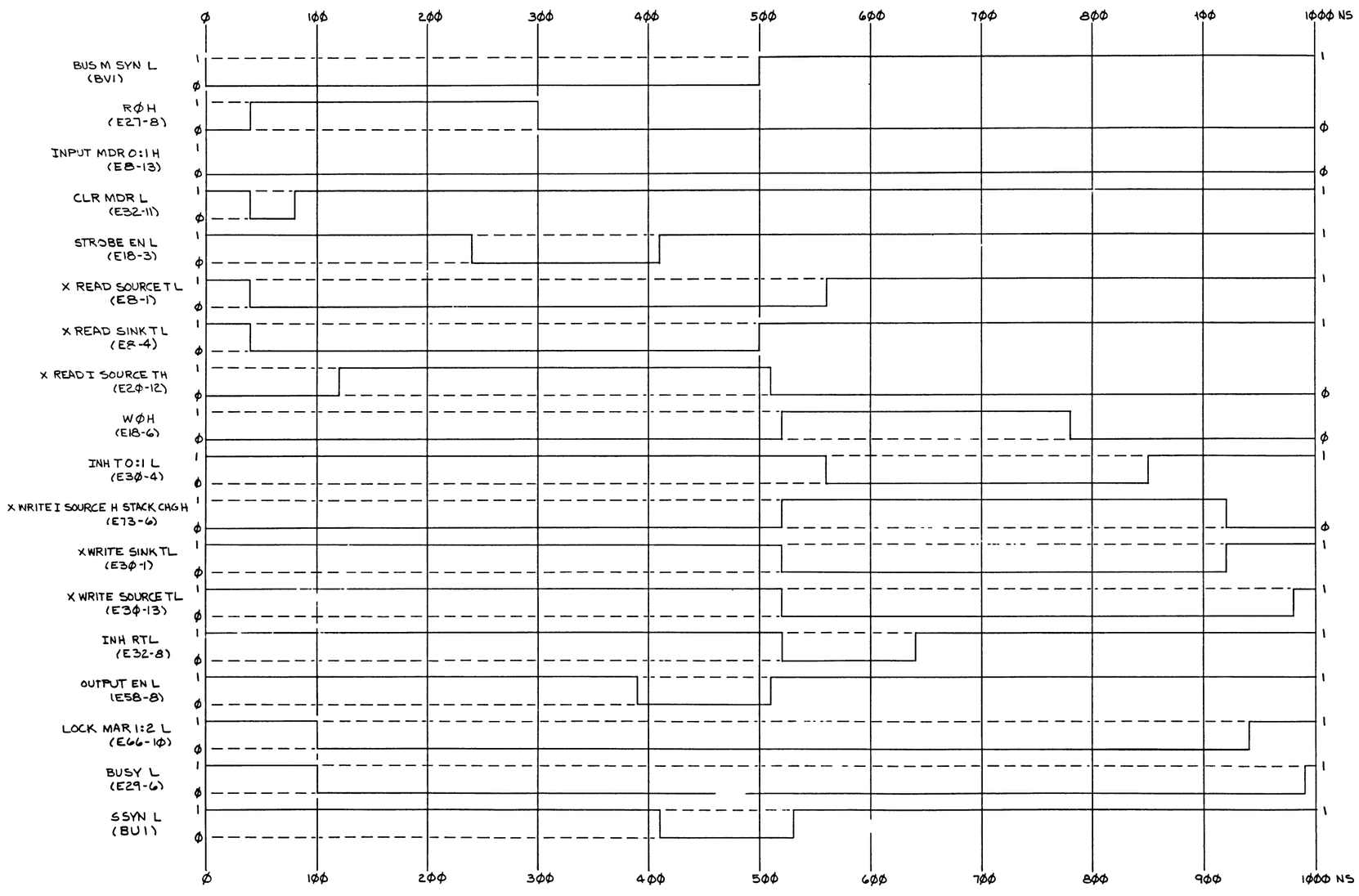

REVISIONS		
CHK	CHANGE NO	REV

TITLE	SIZE	CODE	NUMBER	REV.
MMII-DP TIMING DIAGRAM	D	TD	MMII-DP-2	
SCALE —	SHEET 2 OF 2	DIST.		

DEC FORM NO. DRD 138

"THIS DRAWING AND SPECIFICATIONS, HEREIN, ARE THE PROPERTY OF DIGITAL EQUIPMENT CORPORATION AND SHALL NOT BE REPRODUCED OR COPIED OR USED IN WHOLE OR IN PART AS THE BASIS FOR THE MANUFACTURE OR SALE OF ITEMS WITHOUT WRITTEN PERMISSION. COPYRIGHT © 1975, DIGITAL EQUIPMENT CORPORATION"

LEGEND			
VARIATION		DESCRIPTION	DWG. NUMBER
MM11-D WILL INCLUDE MODULE COMBINATION C OR D	D	GG52-YA 16K x 18 CORE MEM.	D-CS-GG52-0-1
		H222-YB STACK BOARD (16 BIT)	D-UA-H222-B-0
	C	GG52 16K x 18 CORE MEM.	D-CS-GG52-0-1
		H222-B STACK BOARD (16 BIT)	D-UA-H222-B-0
MM11 DP WILL INCLUDE MODULE COMBINATION A OR B	B	GG52-YA 16K x 18 CORE MEM.	D-CS-GG52-0-1
		H222-YA STACK BOARD (18 BIT)	D-UA-H222-A-0
	A	GG52 16K x 18 CORE MEM.	D-CS-GG52-0-1
		H222-A STACK BOARD (18 BIT)	D-UA-H222-A-0

NOTE :

1. MM11-DP MEMORY MODULE ASSEMBLY (16K X 18 BIT) MAY BE SUBSTITUTED FOR MM11-D MODULE ASSEMBLY (16K x 16 BIT).
2. GG52-YA'S WILL NOT OPERATE WITH H222'S.
3. H222-YA'S & YB'S WILL NOT OPERATE WITH GG52'S.

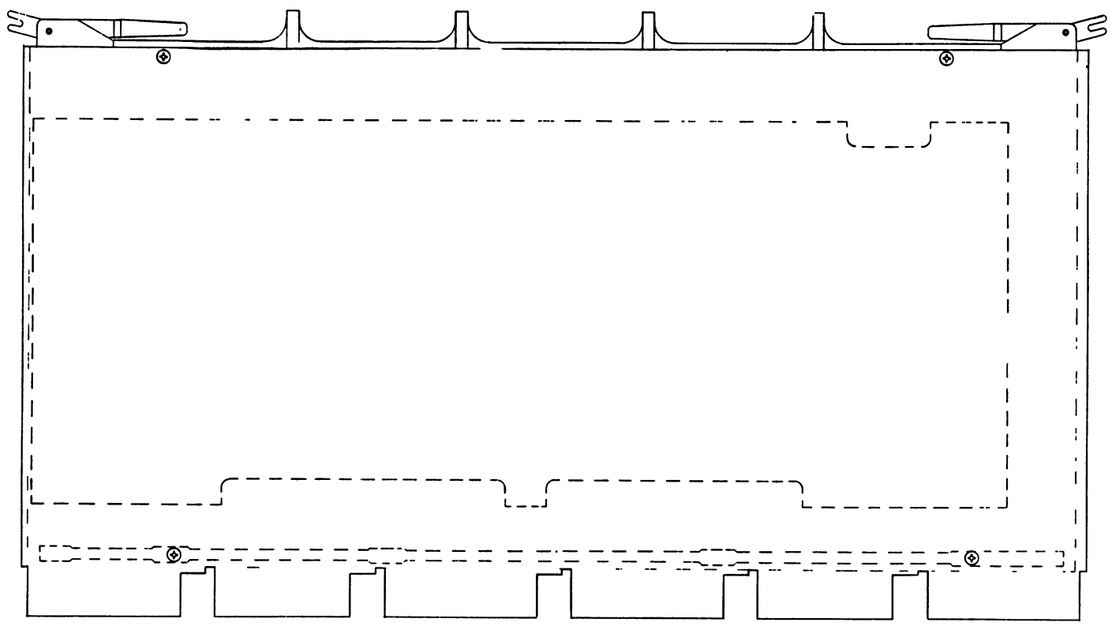

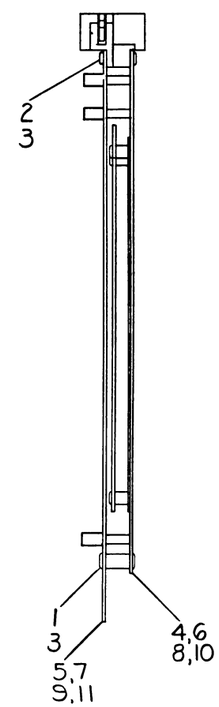

4	4	WASHER, LOCK #2 INT TOOTH	9006631-00	6
2	2	SCR, PHL PAN HD. SS #2-56 X .31 LG	9006002-01	5
2	2	SCR, PHL PAN HD. SS #2-56 X .19	9006000-01	4
1	1	16K X 18 CORE MEMORY (GG52)	D-CS-G652-Ø-1	3
1		H222 STACK BOARD (16 BIT)	D-UA-H222-B-Ø	2
	1	H222 STACK BOARD (18 BIT)	D-UA-H222-A-Ø	1
		DESCRIPTION	DWG /PART NO	ITEM NO.

QUANTITY & VARIATION	MM11-D	MM11-DP

UNLESS OTHERWISE SPECIFIED DIMENSIONS ARE IN INCHES

ANGLES ±0° 30'	CLASS OF ACCURACY (CHECK ONE)	NOMINAL DIMENSION RANGE INCHES					
		OVER 0 TO 0.2	OVER 0.2 TO 1.2	OVER 1.2 TO 4.0	OVER 4.0 TO 12.0	OVER 12.0 TO 40.0	OVER 40.0 TO 80.0
SURFACE QUALITY IN MICROINCHES	MEDIUM ☐	±.004	±.008	±.012	±.016	±.024	±.04
	PREFERRED ☐	±.012	±.016	±.026	±.04	±.063	±.1

THIRD ANGLE PROJECTION

REMOVE BURRS AND BREAK SHARP CORNERS

DO NOT SCALE DWG

MATERIAL SEE PARTS LIST

FINISH

DRN W. LUFKIN	7/24/75	FIRST USED ON MM11-DP
CHK'D	8/21/75	digital
ENG.	8/22/75	TITLE MM11-DP MEMORY MODULE ASSEMBLY
PROJ. ENG.	8/22/75	
PROD.	8/26/75	
NEXT HIGHER ASSY.	B-DD-MM11-DP	SIZE D · CODE UA · NUMBER MM11-DP-Ø · REV. A
SCALE 1/1		
SHEET 1 OF 1		DIST.

REVISIONS			
CHK	CHANGE NO.	REV.	
K/T	MM11DP-00002	A	
B Quinn	22 Feb 77		
D SMELSER			
D Lufkin	3/10/77		

DEC FORM NO. DRD 100-C

digital EQUIPMENT CORPORATION MAYNARD MASSACHUSETTS

DRAWING DIRECTORY

"THIS DRAWING AND SPECIFICATIONS, HEREIN, ARE THE PROPERTY OF DIGITAL EQUIPMENT CORPORATION AND SHALL NOT BE REPRODUCED OR COPIED OR USED IN WHOLE OR IN PART AS THE BASIS FOR THE MANUFACTURE OR SALE OF ITEMS WITHOUT WRITTEN PERMISSION. COPYRIGHT © 1975, DIGITAL EQUIPMENT CORPORATION"

CUSTOMER PRINT SET INDEX

SEQUENCE

SEQUENCE

THIS IS PRINT SET

UNIT VARIATIONS		PRINT SET
VAR	TITLE	
H222-A	16K X 18 BIT DEC	
H222-B	16K X 16 BIT DEC	
H222-YA	16K X 18 BIT CONTROL DATA	
H222-YB	16K X 16 BIT CONTROL DATA	

REVISIONS		
DATE	CHG. NO.	REV
5-76	H222-1	A
2-77	H222-2	B

USED ON OPTION/MODEL

SHEET 1 OF 2

DRN. N. LUFKIN	DATE 24/OCT/75	TITLE H222 MEMORY STACK
CHK'D. N. Lufkin	DATE 24/OCT/75	
PROJ ENG. D. Fowler	DATE 10/28/75	
PROD. R.A. Hill	DATE 10/29/75	SIZE B · CODE DD · NUMBER H222-Ø · REV B
FIELD SERV. G. M. Evans	DATE 11/4/75	DIST

DEC 16-(1329)-1062-1A-A972

DRB 106

CUSTOMER PRINT SET	MFG SET	ELECTRICAL FIND NO	DRAWING NO.	REV	NO OF SHT	DESCRIPTION	OPTION NO / FILE DATE
			B-DD-H222-Ø		2	DRAWING DIRECTORY	
			D-CS-5411554-0-1			H222 STACK BOARD	
			E-IA-7011661-0-0		2	CORE PLANE WIRING ASSEMBLY	

CUSTOMER PRINT SET	MFG SET	MECHANICAL FIND NO.	DRAWING NO.	REV	NO OF SHT	DESCRIPTION	OPTION NO / FILE DATE
			D-UA-H222-A-0		1	H222 CORE MEMORY STACK ASSY	
			D-PA-1211725-0-0		1	STIFFENER, FINGER END	
			D-PS-1211726-0-0		1	STIFFENER, HANDLE END	
			D-MD-5511796-0-0		1	CORE SUPPORT (16K x 16/18 BIT)	
			D-MD-5511797-0-0		1	COVER (16K X 16/18 BIT)	
			A-PL-5411554-0-0			PARTS LIST	
			D-AH-5411554-0-5			MEMORY STACK SUB	

CUSTOMER PRINT SET CODES		TITLE		SIZE	CODE	NUMBER	REV
	X = PRINT OF DOCUMENT INCLUDED IN PRINT SET C = INCLUDES ALL PRINTS INDICATED ON DOCUMENT S = CONFIDENTIAL AUTHORIZED SIGNATURE REQUIRED	H222 MEMORY STACK	SHEET 2 OF 2	B	DD	H222-Ø	B

DRB 108

"THIS DRAWING AND SPECIFICATIONS, HEREIN, ARE THE PROPERTY OF DIGITAL EQUIPMENT CORPORATION AND SHALL NOT BE REPRODUCED OR COPIED OR USED IN WHOLE OR IN PART AS THE BASIS FOR THE MANUFACTURE OR SALE OF ITEMS WITHOUT WRITTEN PERMISSION. COPYRIGHT © 1975, DIGITAL EQUIPMENT CORPORATION"

"Y" DIODE MATRIX

NOTE:
PREFIX FOR J156-J179 IS MEM4.

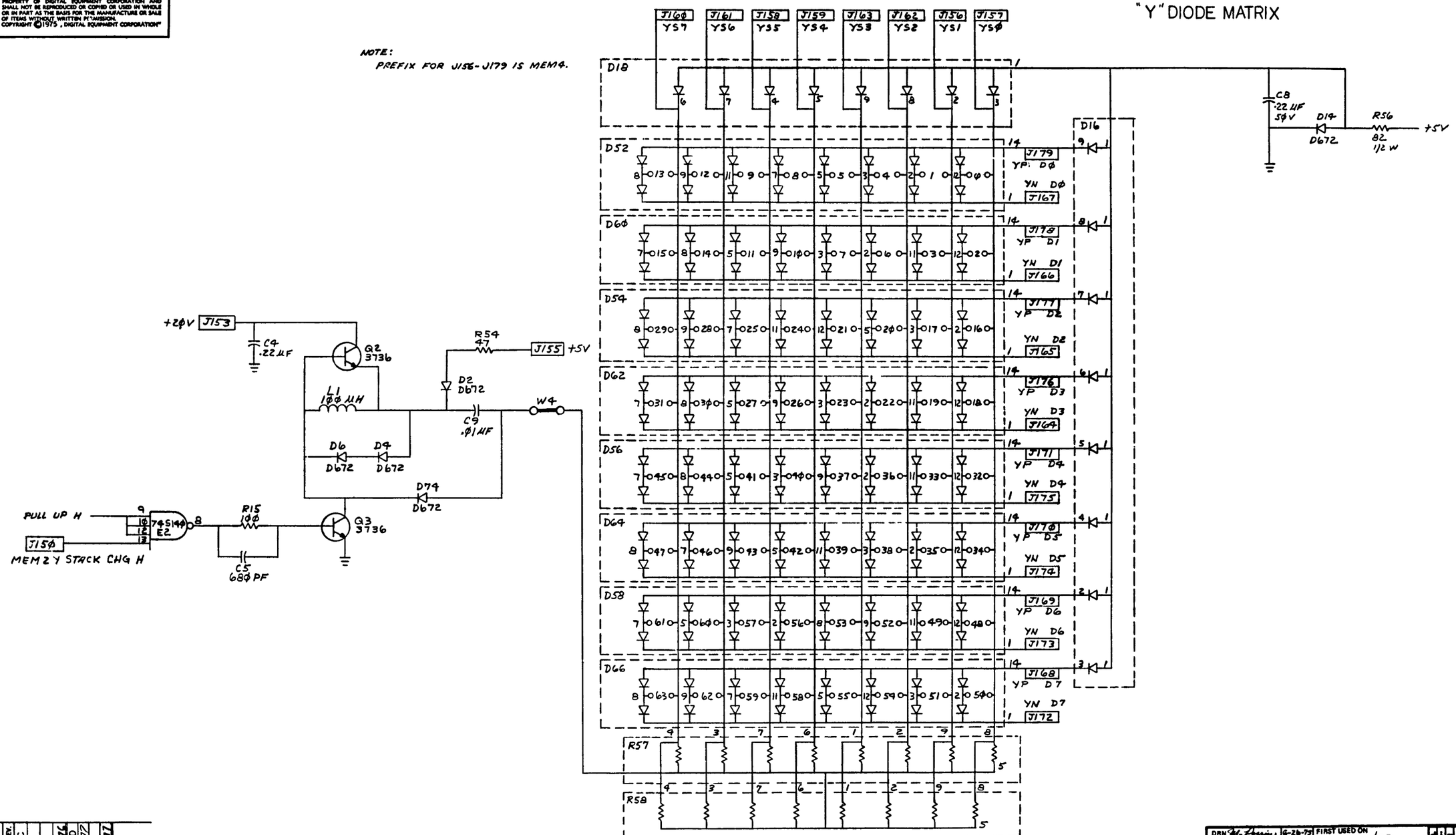

REVISIONS			
CHK	CHANGE NO.	REV.	
	5411554-00001	C	D.SMELSER 6-9-76
	5411554-00002	D	D. SMELSER 3/30/77

DEC FORM NO. DRD 102-0

DRN		6-26-75
CHK'D		7/14/75
ENG		7/14/75
PROJ. ENG		7/14/75
PROD		7/14/75
NEXT HIGHER ASSY.	D-UA-H222-0	
SCALE	—	
SHEET	1 OF 3	

FIRST USED ON MMIID/DP

digital

TITLE 16K X 16, 18 MEMORY STACK

SIZE	CODE	NUMBER	REV.
D	CS	5411554-0-1	D

DIST.

"THIS DRAWING AND SPECIFICATIONS, HEREIN, ARE THE PROPERTY OF DIGITAL EQUIPMENT CORPORATION AND SHALL NOT BE REPRODUCED OR COPIED OR USED IN WHOLE OR IN PART AS THE BASIS FOR THE MANUFACTURE OR SALE OF ITEMS WITHOUT WRITTEN PERMISSION. COPYRIGHT © 1971 DIGITAL EQUIPMENT CORPORATION"

"X" DIODE MATRIX

NOTE:
PREFIX FOR J117-J148 IS MEM3.

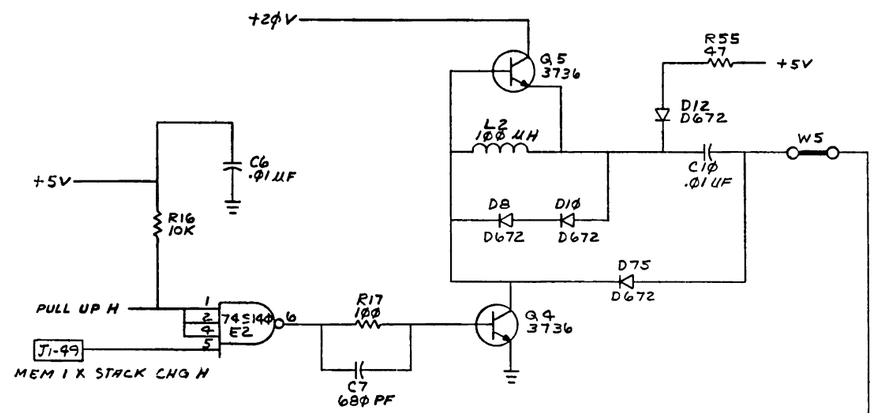

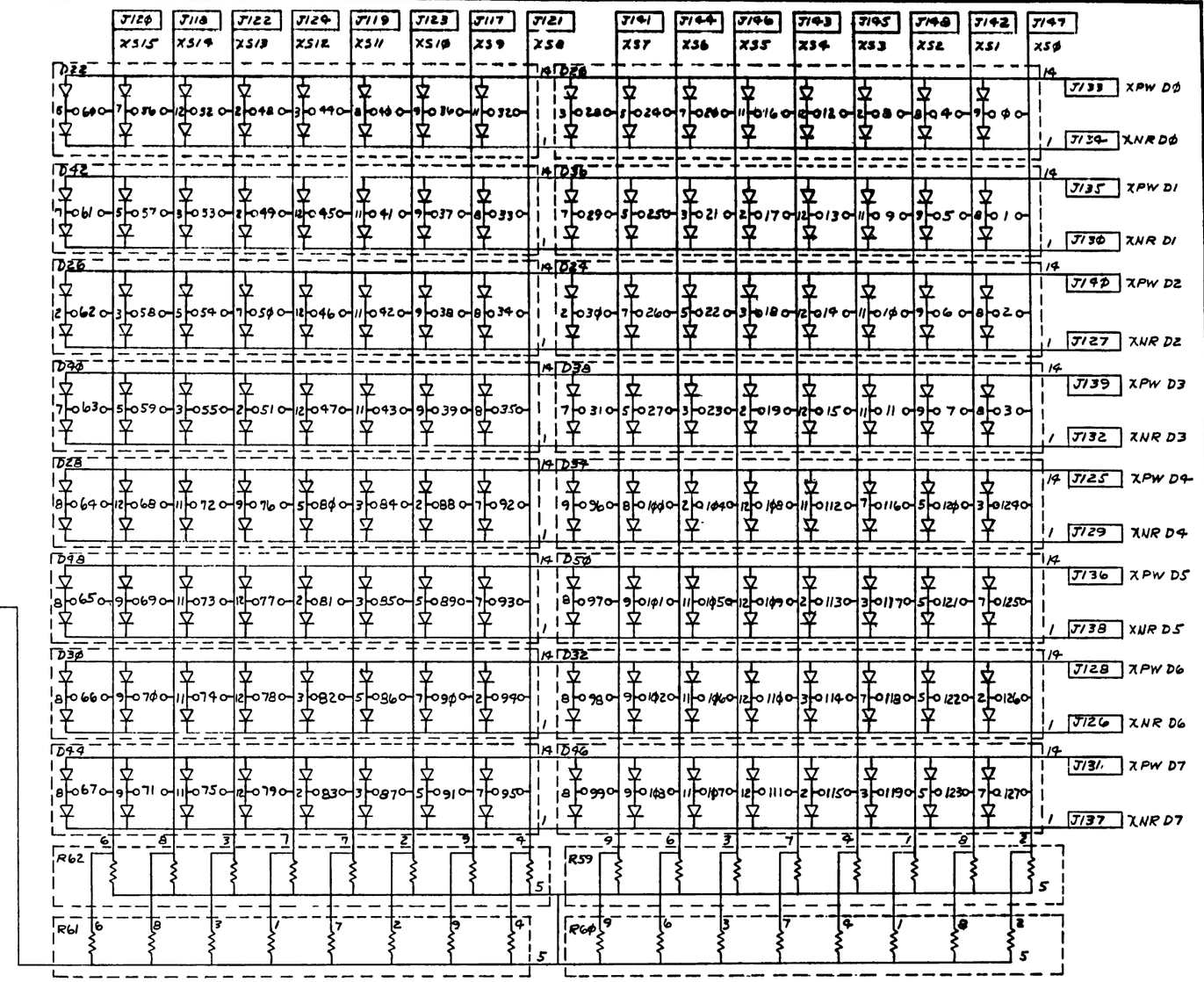

REVISIONS		
CHK	CHANGE NO.	REV.

TITLE 6K X 16, 18 MEMORY STACK
SCALE — SHEET 2 OF 3
SIZE D CODE CS NUMBER 5411554-0-1 REV. D
DIST.

"THIS DRAWING AND SPECIFICATIONS, HEREIN, ARE THE PROPERTY OF DIGITAL EQUIPMENT CORPORATION AND SHALL NOT BE REPRODUCED OR COPIED OR USED IN WHOLE OR IN PARTS AS THE BASIS FOR THE MANUFACTURE OR SALE OF ITEMS WITHOUT WRITTEN PERMISSION. COPYRIGHT © 1975 DIGITAL EQUIPMENT CORPORATION"

NOTES:
1. R18 THRU R53 ARE 1K, 1/4W ±5%
2. UNLESS OTHERWISE SPECIFIED: ALL DIODES ARE D672
3. W3 MUST BE INSTALLED FOR A 16 BIT MEMORY -- H222B, OR H222A USED WITHOUT A PARITY CONTROLLER (M7850).
4. W1 & W2 ARE USED TO ADJUST VREF

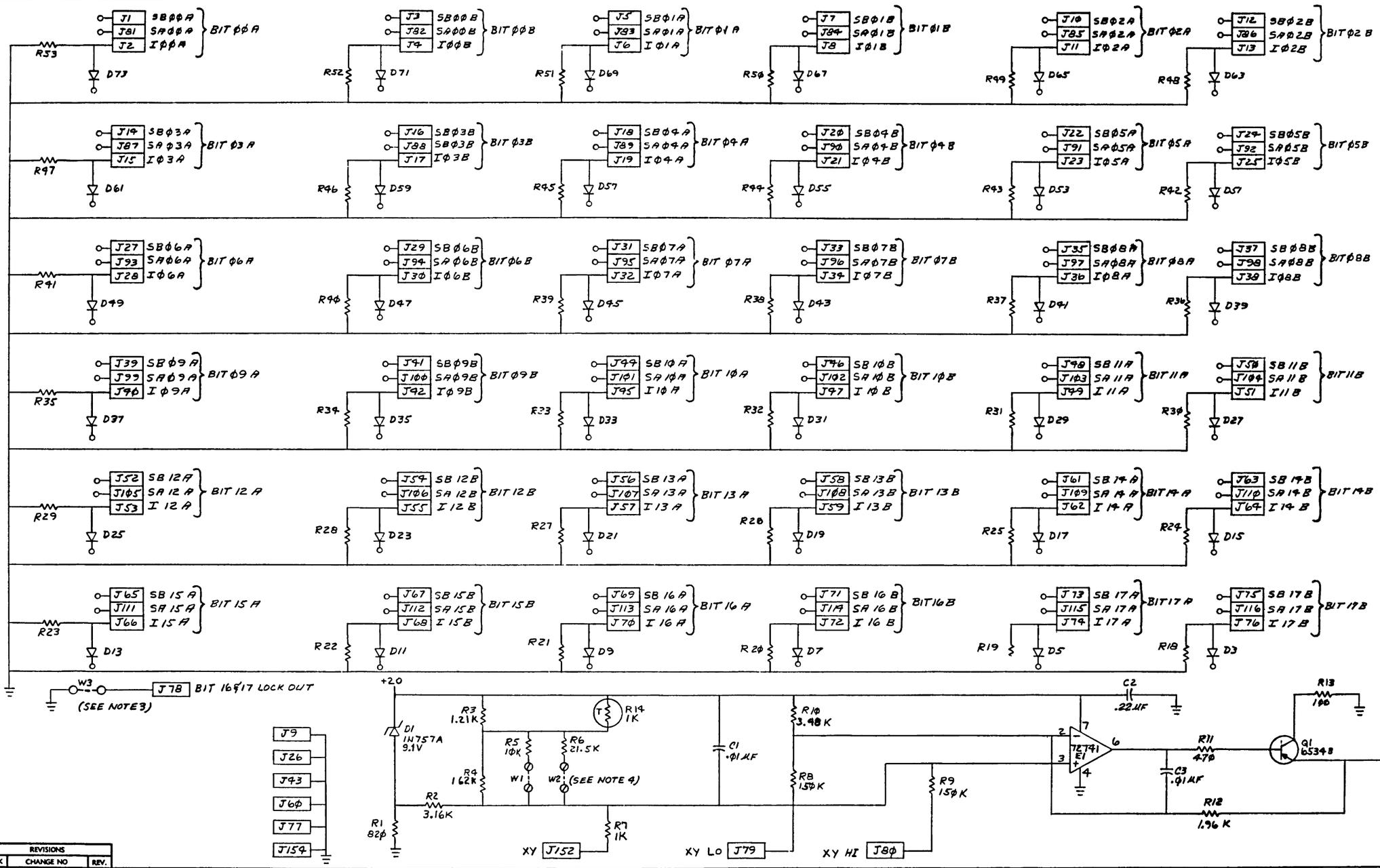

REVISIONS		
CHK	CHANGE NO	REV.

TITLE	SIZE	CODE	NUMBER	REV.
16K X 16, 18 MEMORY STACK	D	CS	5411554-0-1	D
SCALE —	SHEET 3 OF 3	DIST.		

"THIS DRAWING AND SPECIFICATIONS, HEREIN, ARE THE PROPERTY OF DIGITAL EQUIPMENT CORPORATION AND SHALL NOT BE REPRODUCED OR COPIED OR USED IN WHOLE OR IN PART AS THE BASIS FOR THE MANUFACTURE OR SALE OF ITEMS WITHOUT WRITTEN PERMISSION. COPYRIGHT © 1975, DIGITAL EQUIPMENT CORPORATION"

LEGEND			
NUMBER	NUMBER	VARIATION	USED ON
H222-YA	H222 A	16K X 18 BIT	MM11-DP
H222-YB	H222 B	16K X 16 BIT	MM11-D

NOTES:

1. BOND ITEM 1 (CORE PLANE) TO ITEM 3 (STACK BOARD) WITH ITEM 14 (ADHESIVE).
2. SWAGE ITEM 1 (CORE PLANE) AND ITEM 3 (STACK BOARD) TOGETHER WITH ITEM 7 (STANDOFF).
3. USE ITEM 15 (PROTECTIVE COATING) TO COAT ALL MAGNETIC WIRE TERMINATIONS AFTER ELECTRICAL TEST. (REF E-IA-7011661-0-0)
4. BOND TWISTED CABLES TO ITEM 1 (CORE PLANE) WITH ITEM 13 (ADHESIVE). SEE E-IA-7011661-0-0.
5. BOND X & Y DRIVE LOOPS IN PLACE WITH ITEM 13 (ADHESIVE). SEE E-IA-7011661-0-0 NOTES
6. REFER TO E-IA-7011661-0-0 WHEN SOLDERING WIRE TERMINATIONS TO ITEM 3 (STACK BOARD).
7. ASSEMBLE ITEMS 9 & 10 (STIFFENERS) TO ITEM 3 (STACK BOARD) USING ITEMS 6 & 17 .
8. ATTACH ITEM 8 (COVER) TO ITEM 3 (STACK BOARD) USING ITEM 5 (NYLON SCREW).
9. APPLY ITEM 11 (WARRANTY SEAL) WHERE SHOWN.
10. APPLY ITEM 12 (NAME PLATE) TO SIDE 2 OF ITEM 3 (STACK BOARD) AS SHOWN.
11. MARK ITEM 3 (STACK BOARD) ON SIDE 2 WITH DEC PART NUMBER, SEQUENTIAL SERIAL NUMBER, AND CIRCUIT SCHEMATIC REVISION USING ITEM 4 (INK) AND ITEM 16 (EPOXY). EXAMPLE: H222-A-001-CS-B.
12. TRIM AMP POSTS AND COMPONENT LEADS TO BE .05 IN THIS AREA OF SIDE 2.
13. INSTALL ITEM 17 (LOCKWASHER) "TORQUE HAND TIGHT".

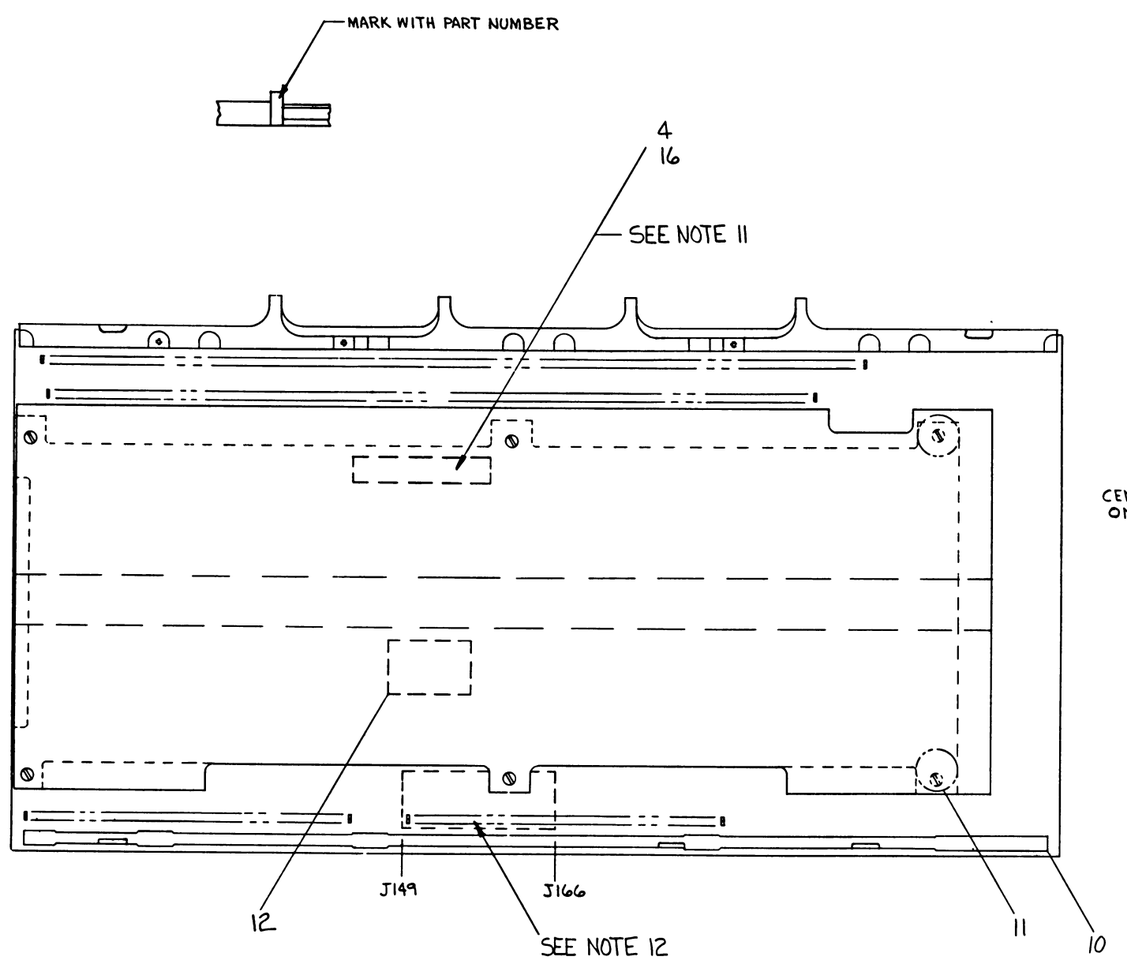

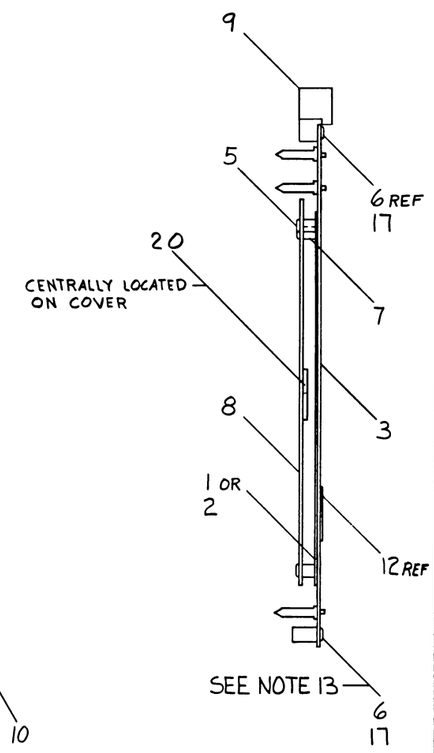

H222-YB	H222-YA	H222-B	H222-A	DESCRIPTION	DWG./PART NO.	ITEM NO.
1	1	1	1	TAPE FOAM ADHESIVE 1/4x1/4x.06	9008456-01	20
1	–	–	–	CORE PLANE WIRING ASSY.	E-IA-7011661-3-0	19
1	1	–	–	CORE PLANE WIRING ASSY.	E-IA-7011661-2-0	18
8	8	8	8	WASHER, LOCK #2 INT TOOTH	9006631-00	17
A/R	A/R	A/R	A/R	EPOXY	4901082-00	16
A/R	A/R	A/R	A/R	PROTECTIVE COATING (F145)	4901083-00	15
A/R	A/R	A/R	A/R	ADHESIVE (RTV 3145)	4901086-00	14
A/R	A/R	A/R	A/R	ADHESIVE (RTV 3140)	4901085-00	13
1	1	1	1	NAME PLATE	~~9009238-00~~	12
2	2	2	2	WARRANTY SEAL		11
1	1	1	1	STIFFENER, FINGER END	D-PS-1211725-0-0	10
1	1	1	1	STIFFENER, HANDLE END	D-PS-1211726-0-0	9
1	1	1	1	COVER	D-MD-5511797-0-0	8
6	6	6	6	STANDOFF .25 DIA X .19 LG	9009677-00	7
8	8	8	8	SCR, PHL PAN HD SS #2-56X.19	9006000-01	6
6	6	6	6	SCR, SLT BNDR HD NYLON #4 40 X.19	9009233-04	5
A/R	A/R	A/R	A/R	INK, BLACK	4901084-00	4
1	1	1	1	H222 STACK BOARD	5411554	3
–	–	1	–	CORE PLANE WIRING ASSY	E-IA-7011661-1-0	2
–	–	–	1	CORE PLANE WIRING ASSY	E-IA-7011661-0-0	1

QUANTITY & VARIATION

UNLESS OTHERWISE SPECIFIED DIMENSIONS ARE IN INCHES

CLASS OF ACCURACY (CHECK ONE)	OVER 0 TO 0.2	OVER 0.2 TO 1.2	OVER 1.2 TO 4.0	OVER 4.0 TO 12.0	OVER 12.0 TO 40.0	OVER 40.0 TO 80.0
MEDIUM	±.004	±.008	±.012	±.016	±.024	±.04
PREFERRED	±.012	±.016	±.026	±.04	±.063	±0.1

ANGLES ±0° 30'

SURFACE QUALITY IN MICROINCHES

THIRD ANGLE PROJECTION

REMOVE BURRS AND BREAK SHARP CORNERS

DO NOT SCALE DWG

MATERIAL SEE PARTS LIST

FINISH

DRN.	W. LUFKIN	7/17/75
CHK'D		8/21/75
ENG.		8/22/75
PROJ. ENG.		8/22/75
PROD.		8/26/75

NEXT HIGHER ASSY. D-UA-MM11-DP-0

SCALE 1/1

SHEET 1 OF 1

FIRST USED ON MM11-DP

digital

TITLE H222 CORE MEMORY STACK ASSEMBLY

SIZE	CODE	NUMBER	REV.
D	UA	H222-0-0	B

DIST.

REV.	CHK.	CHANGE NO.	REVISIONS
A		H-222-00002	
B		H222-00003	

D. SMELSER 2/14/77

D. SMELSER 12 DEC 77

D. SMELSER 12/26/77

DEC FORM NO. DRD 100-C

"THIS DRAWING AND SPECIFICATIONS HEREIN ARE THE PROPERTY OF DIGITAL EQUIPMENT CORPORATION AND SHALL NOT BE REPRODUCED OR COPIED OR USED IN WHOLE OR IN PART AS THE BASIS FOR THE MANUFACTURE OR SALE OF ITEMS WITHOUT WRITTEN PERMISSION
COPYRIGHT © 1975 DIGITAL EQUIPMENT CORPORATION"

NOTES:

1. ALL RESISTORS 1/4 W, 5% UNLESS OTHERWISE NOTED.
   ALL CAPACITORS ARE 100V, 20% UNLESS OTHERWISE NOTED.
2. JUMPER CONTROL OPERATIONS AS FOLLOWS:
   W1 THRU W4 SELECT CSR ADDRESS, W5 CAPACITOR FOR S SYN DLY, NOT USED.
3. E32 IS A SPARE LOCATION.

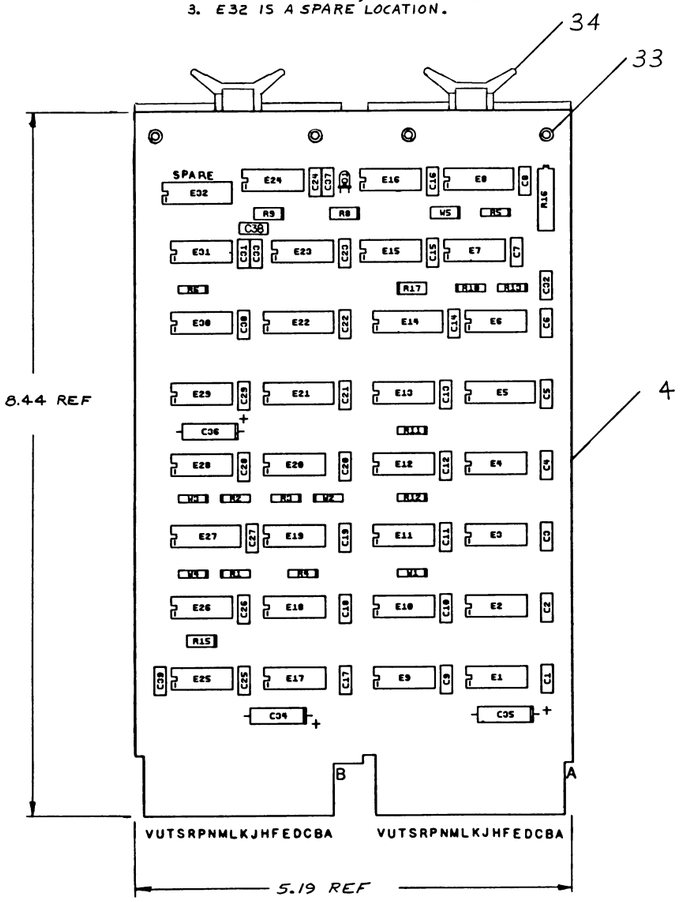

SPARES:

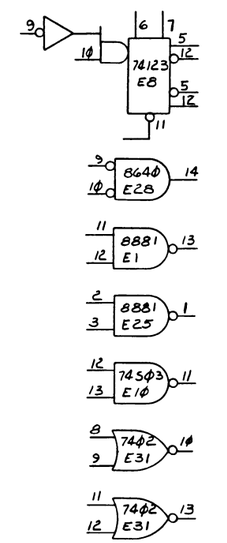

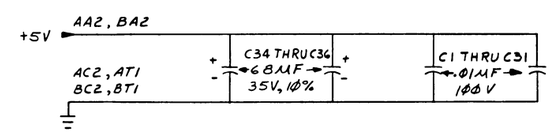

QTY	REF. DESIGNATION	DESCRIPTION	PART NO.	ITEM NO
REF		CIRCUIT SCHEMATIC	D-CS-M7850-0-1	REF
REF		X-Y COORDINATE HOLE LOCATION	K-CO-M7850-0-4	1
REF		ASSY/DRILLING HOLE LAYOUT	D-AH-M7850-0-5	2
REF		MODULE ECO HISTORY	B-MH-M7850-0-6	3
1		ETCHED CIRCUIT BOARD	5010651-00	4
1	C39	CAP 470 PF, 100V, 5% (DM)	1000024-00	5
2	C33, C37	CAP 330 PF, 100V, 5% (DM)	1000023-00	6
32	C1 THRU C32	CAP .01 MF, 100 V, 20% DISC	1001610-01	7
3	C34, C35, C36	CAP 6.8 MF, 35V, 10% STANT	1005306-00	8
1	D1	DIODE, L.E.D.	1110324-00	9
5	R1 THRU R5	RES 4.7K 1/4W 5%	1300447-00	10
3	R8, R9, R15	RES 100 1/4W 5%	1300229-00	11
5	R6, R10, R11, R12, R17	RES 470 1/4W 5%	1300316-00	12
1	R13	RES 1K 1/4W 5%	1300365-00	13
1	R16	RES 10K 3/4W 20% (76 PR.RST)	1309143-10	14
1	E24	I.C. 7400	1905575-00	15
1	E30	I.C. 7430	1905578-00	16
1	E31	I.C. 7402	1909004-00	17
1	E19	I.C. 314A	1909704-00	18
1	E23	I.C. 7408	1910155-00	19
4	E1, E9, E17, E25	I.C. 8881	1909705-00	20
1	E16	I.C. 74H04	1909931-00	21
1	E27	I.C. 7485	1910224-00	22
1	E8	I.C. 74123	1910436-00	23
1	E10	I.C. 74503	1910533-00	24
1	E15	I.C. 74574	1910544-00	25
1	E21	I.C. 74174	1910652-00	26
2	E5, E22	I.C. 74157	1910655-00	27
9	E2, E3, E11, E12, E18 E20, E26, E28, E29	I.C. 8640	1911469-00	28
2	E4, E13	I.C. 745280	1911573-00	29
1	E14	I.C. 8266	1909934-00	30
2	E6, E7	I.C. 7474	1905547-00	31
4	W1 THRU W4	INSULATED JUMPER	9009185-00	32
4		EYELET	9006732-00	33
2		HANDLE, FLIP-CHIP (MAGENTA)	9008337-6	34

PARTS LIST

ETCH BOARD REV. B

FIRST USED ON OPTION MODEL

8640	1	8
8266	8	16
74157	8	16
74174	8	16
74123	8	16
7485	8	16
314A	1	8
IC TYPE	GND	+5V

GND AND 5V ARE USUALLY PIN 7 AND 14 RESPECTIVELY EXCEPTIONS ARE STATED ABOVE

IC PIN LOCATIONS

DEC NO.	EIA NO.	DEC NO.	EIA NO

SEMICONDUCTOR CONVERSION CHART

REVISIONS: REV B — CHANGE NO. M7850-00001 — J MANTON 1-3-75 — CHK

DRN. W. LUFKIN DATE 2-5-75
CHK'D. DATE 2/17/75
ENG. DATE 2/18/75
PROJ. ENG. DATE 2/18/75
PROD. DATE 2/28/75
NEXT HIGHER ASSY
SCALE
SHEET 1 OF 3

digital

TITLE PARITY MODULE

SIZE D CODE CS NUMBER M7850-0-1 REV. B

DIST.

DEC FORM NO DRB 120.8

"THIS DRAWING AND SPECIFICATIONS, HEREIN, ARE THE PROPERTY OF DIGITAL EQUIPMENT CORPORATION AND SHALL NOT BE REPRODUCED OR COPIED OR USED IN WHOLE OR IN PART AS THE BASIS FOR THE MANUFACTURE OR SALE OF ITEMS WITHOUT WRITTEN PERMISSION. COPYRIGHT © 1973 DIGITAL EQUIPMENT CORPORATION"

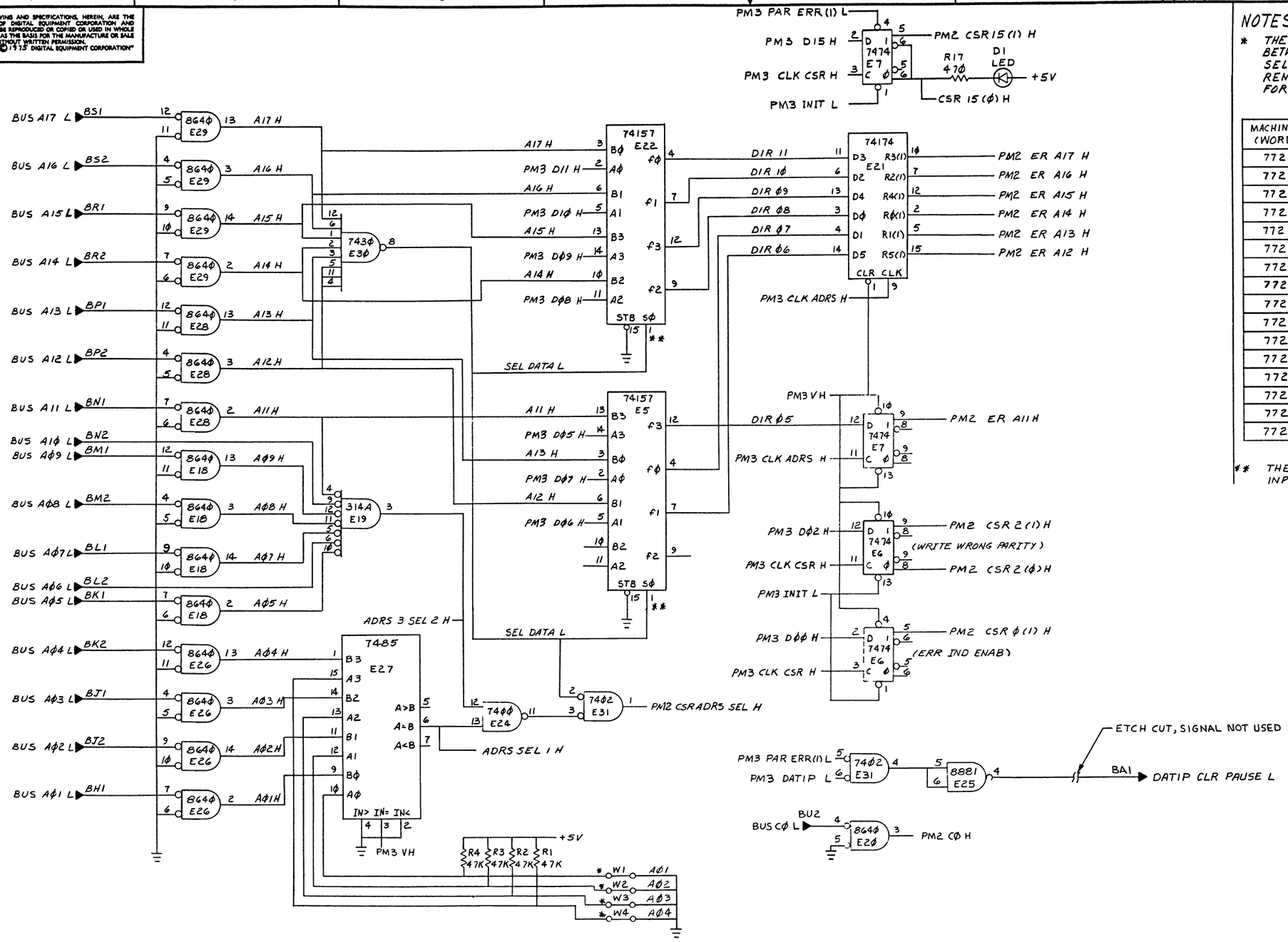

NOTES:

* THE CSR REGISTER ADDRESS IS LOCATED BETWEEN 772100 AND 772136. IT IS SELECTED WITH JUMPERS W1 THRU W4. REMOVING A JUMPER SELECTS A "ONE" FOR THAT BIT POSITION. (*)

MACHINE ADDRESS (WORDS) 8	W4 A4	W3 A3	W2 A2	W1 A1
772100	IN	IN	IN	IN
772102	IN	IN	IN	OUT
772104	IN	IN	OUT	IN
772106	IN	IN	OUT	OUT
772110	IN	OUT	IN	IN
772112	IN	OUT	IN	OUT
772114	IN	OUT	OUT	IN
772116	IN	OUT	OUT	OUT
772120	OUT	IN	IN	IN
772122	OUT	IN	IN	OUT
772124	OUT	IN	OUT	IN
772126	OUT	IN	OUT	OUT
772130	OUT	OUT	IN	IN
772132	OUT	OUT	IN	OUT
772134	OUT	OUT	OUT	IN
772136	OUT	OUT	OUT	OUT

** THE "A" INPUTS ARE SELECTED WHEN THE SEL INPUT GOES LOW. (**)

REVISIONS		
CHK	CHANGE NO	REV

TITLE: PARITY MODULE (PM2)
SIZE: D CODE: CS NUMBER: M7850-0-1 REV. B
SCALE: SHEET 2 OF 3 DIST.

DEC FORM NO DRD 138

"THIS DRAWING AND SPECIFICATIONS, HEREIN ARE THE PROPERTY OF DIGITAL EQUIPMENT CORPORATION AND SHALL NOT BE REPRODUCED OR COPIED OR USED IN WHOLE OR IN PART AS THE BASIS FOR THE MANUFACTURE OR SALE OF ITEMS WITHOUT WRITTEN PERMISSION COPYRIGHT © 1975 DIGITAL EQUIPMENT CORPORATION"

NOTES:

* B INPUTS SELECTED WHEN SEL IS LOW (*)

** SET R16 TO 110 NSEC. ± 10 NS FROM SIGNAL ON PIN BE1 GOING LOW TO SIGNAL ON PIN BB2 GOING HIGH. (@ 1.5V LEVEL) (**)

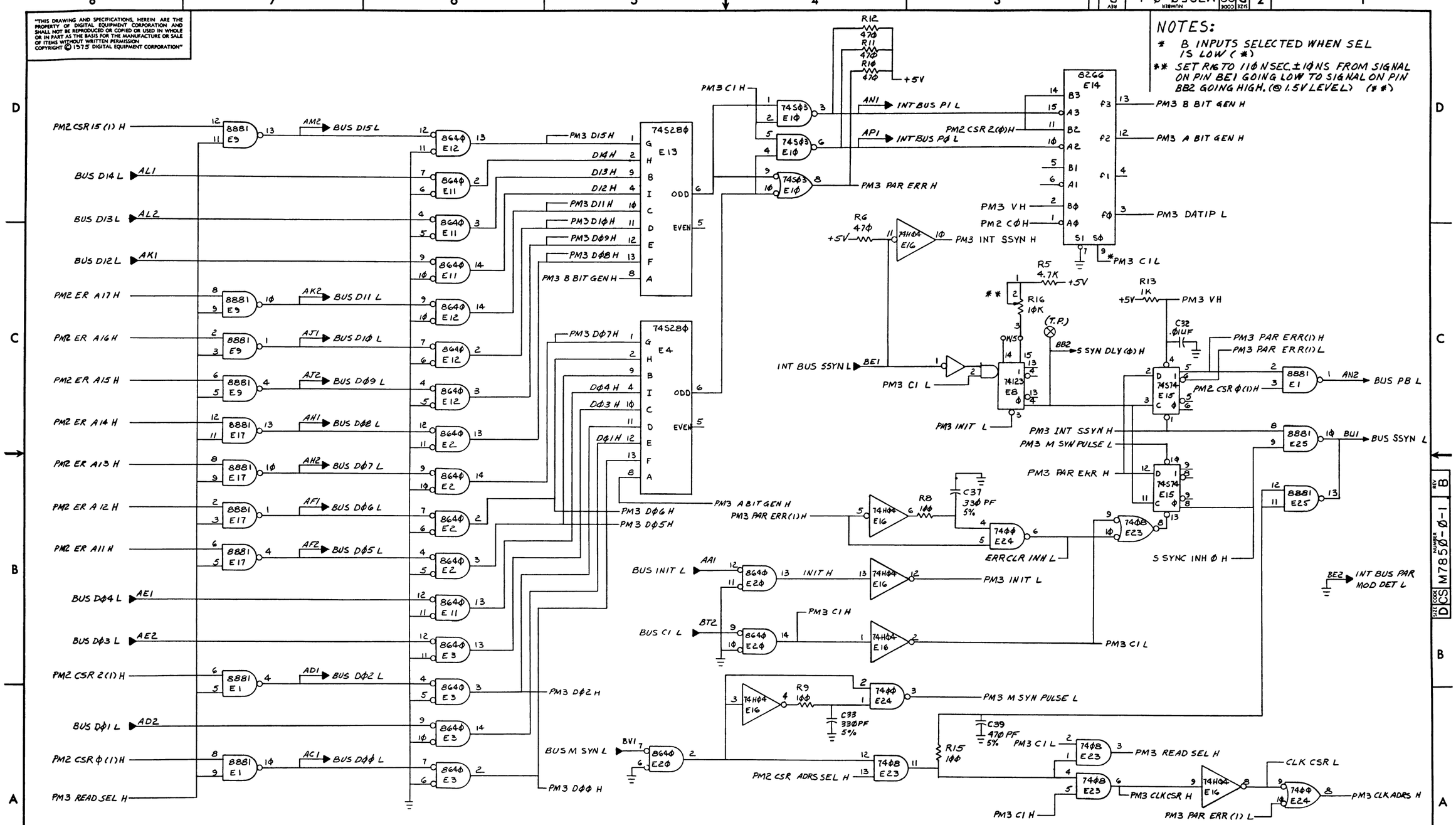

REVISIONS		
CHK	CHANGE NO	REV

TITLE	SIZE	CODE	NUMBER	REV.
PARITY MODULE (PM3)	D	CS	M7850-0-1	B
SCALE	SHEET 3 OF 3	DIST.		

DEC FORM NO DRD 138

THESE DRAWINGS AND THE INFORMATION CONTAINED THEREIN ARE THE PROPERTY OF THE DIGITAL EQUIPMENT CORPORATION AND SHALL NOT BE REPRODUCED OR COPIED OR USED IN WHOLE OR IN PART AS THE BASIS FOR THE MANUFACTURE OR SALE OF ITEMS WITHOUT WRITTEN PERMISSION.
COPYRIGHT © 1977 DIGITAL EQUIPMENT CORPORATION

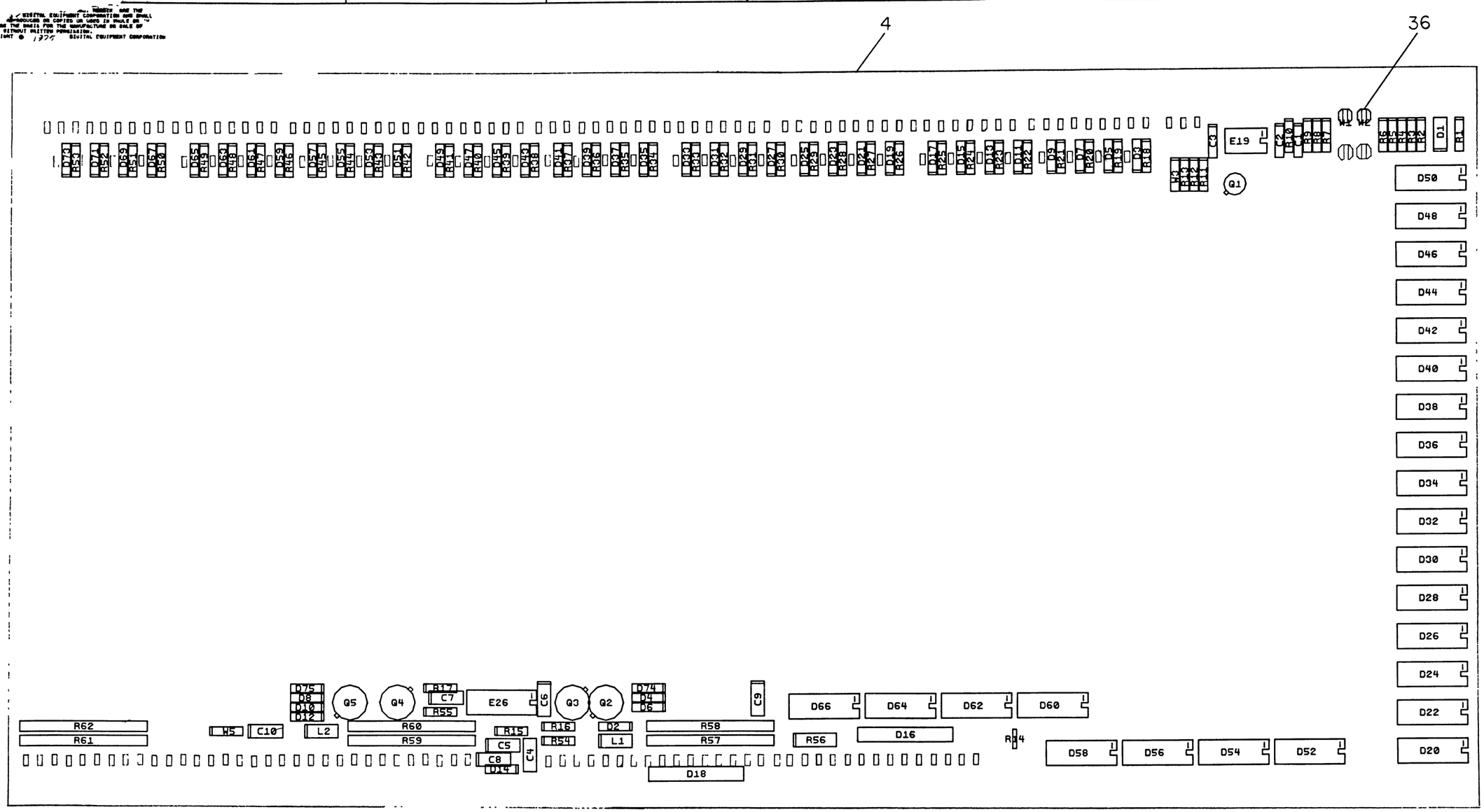

DIGITAL EQUIPMENT CORPORATION
MAYNARD, MASSACHUSETTS

PARTS LIST

MADE BY M. Poirier	CHECKED K. Varadjian	SECTION
DATE 7/7/75	DATE 7/7/75	
ENG D. Smelker	PROD R A Hill	ISSUED SECT.
DATE 7/14/75	DATE 7/14/75	

QUANTITY/VARIATION

ITEM NO.	DWG NO./PART NO.	DESCRIPTION	QTY	REFERENCE DESIGNATIONS
1	D-CS-5411554-0-1	CIRCUIT SCHEMATIC	REF	
2	D-AH-5411554-0-5	ASSY/DRILLING HOLE LAYOUT	REF	
3	B-MH-5411554-0-6	MODULE ECO HISTORY	REF	
4	5011493	ETCHED CIRCUIT BOARD	1	
5	1000926-00	CAP 680 PF 100V 5% DM	2	C5,C7
6	1001610-01	CAP .01UF 100V CER	5	C1,C3,C6,C9,C10
7	1010274-00	CAP .22UF 50V CER	3	C4,C8,C2
8	1105275-00	DIODE D672	44	D2-D15,D17,D19,D21,D23,D25,D27
				D29,D31,D33,D35,D37,D39,D41,
				D43,D45,D47,D49,D51,D53,D55,D59
				D61,D63,D65,D67,D69,D71,D73,D74
				D75
9	1109990-00	DIODE,ZENER 1N757A 9.1V 5%	1	D1
10	7010918-3-0	DIODE NETWORK	2	D16,D18
11	1910010-00	DIODE PACK 2501	24	D20,D22,D24,D26,D28,D30,D32,D34
				D36,D38,D40,D42,D44,D46,D48,D50
				D52,D54,D56,D58,D60,D62,D64,D66
12	1300229-00	RES 100 1/4W 5%	3	,R13,R15,R17
13	1301775-00	RES 820 1/4W 5%	1	R1
14	1304862-00	RES 1.62K 1/8W 1%	1	R4
15	1302871-00	RES 1.21K 1/8W 1%	1	R3
16	1304833-00	RES 1.96K 1/8W 1%	1	R12,

TITLE	ASSY NO.	SIZE	CODE	NUMBER	REV.	ECO NO.
16K x 16, 18 MEMORY STACK	D-UA-5411554-0-0	A	PL	5411554-0-0	D	00002
	SHEET 1 OF 2	DIST.				

DEC FORM DEC 16-(325)-1031-N870
DRA

DIGITAL EQUIPMENT CORPORATION
MAYNARD, MASSACHUSETTS

PARTS LIST

MADE BY M. Poirier	CHECKED K. Varadjian	SECTION
DATE 7/7/75	DATE 7/7/75	
ENG D. Smelker	PROD R A Hill	ISSUED SECT.
DATE 7/14/75	DATE 7/14/75	

QUANTITY/VARIATION

ITEM NO.	DWG NO./PART NO.	DESCRIPTION	QTY	REFERENCE DESIGNATIONS
17	1303045-00	RES 3.16K 1/4W 1%	1	R2
18	1300479-00	RES 10K 1/4W 5%	1	R16
19	1303312-00	RES 10K 1/8W 1%	1	R5
20	1300316-00	RES 470 1/4W 5%	1	R11
21	1303155-00	RES 21.5K 1/8W 1%	1	R6
22	1302396-00	RES 150K 1/4W 5%	2	R8,R9
23	1301781-00	RES 82 1/2W 5%	1	R56
24	1300202-00	RES 47 1/4W 5%	2	R54,R55
25	1300365-00	RES 1K 1/4W 5%	37	R18-R53,R7
26	1310071-00	RES 1K 1% THERMISTER	1	R14
27	1311742-00	RES NETWORK 220 1/4W 1%	6	R57-R62
28	1503366-00	TRANS 2N3736	4	Q2-Q5
29	1503409-01	TRANS 6534B	1	Q1
30	1610662-00	INDUCTOR 100UH	2	L1,L2
31	1910298-00	I.C. 72741	1	E1
32	1910546-00	I.C. 74S140	1	E2
33	1211727-00	CONTACT, MALE	179	J1-J179
34	9009185-00	JUMPER, INSULATED (.4 LONG)	1	W5
35	9107560-01	JUMPER, BUSS WIRE (#22 AWG)	4	W1-W4 (OPTIONAL)
36	9006735-00	EYELET (SPLIT LUG)	4	
37	1305114-00	RES 3.48K 1/8W 1%	1	R10

TITLE	ASSY NO.	SIZE	CODE	NUMBER	REV.	ECO NO.
16K x 16, 18 MEMORY STACK	D-UA-5411554-0-0	A	PL	5411554-0-0	D	
	SHEET 2 OF 2	DIST.				

DEC FORM DEC 16-(325)-1031-N870
DRA

BLANK

"THE MATERIAL HEREIN IS FOR INFORMATION PURPOSES ONLY AND IS SUBJECT TO CHANGE WITHOUT NOTICE. DIGITAL EQUIPMENT CORPORATION ASSUMES NO RESPONSIBILITY FOR ANY ERRORS WHICH MAY APPEAR HEREIN."

FIELD MAINTENANCE PRINT SET

"THIS DRAWING AND SPECIFICATIONS, HEREIN, ARE THE PROPERTY OF DIGITAL EQUIPMENT CORPORATION AND SHALL NOT BE REPRODUCED OR COPIED OR USED IN WHOLE OR IN PART AS THE BASIS FOR THE MANUFACTURE OR SALE OF ITEMS WITHOUT WRITTEN PERMISSION. COPYRIGHT © 1977 , DIGITAL EQUIPMENT CORPORATION."

TABLE OF CONTENTS

B-TC-MM11-YP-1	MM11-DP PRINT SET
	TABLE OF CONTENTS
B-DD-MM11-YP	DRAWING DIRECTORY
B-DD-G657-Ø	32K SPC ELECTRONICS
D-TD-M11-YP-2	TIMING DIAGRAM
D-UA-MM11-YP-Ø	MM11-YP MEMORY MODULE ASSY.
B-DD-H228-B	DRAWING DIRECTORY
D-CS-5412149-Ø-1	32K SPC MEMORY
D-UA-H228-B-Ø	H228 CORE MEMORY STACK ASSY.
D-CS-M785Ø-Ø-1	PARITY CONTROLLER
B-PL-5412149-0-0	32K SPC MEMORY
B-PL-G657-0-0	32K ELECTRONICS
D-UA-G657-0-0	32K ELECTRONICS (SHTS. 1 & 6 ONLY)
D-UA-5412149-0-0	32K SPC MEMORY (SHTS 1 & 4 ONLY)
D-CS-G657-0-1	32K SPC ELECTRONICS

UNIT VARIATIONS COVERED BY THIS PRINT SET
MM11-Yp

MM11-YP

Field Maintenance Print Set

Digital Equipment Corporation

PRINT SET ORDER NUMBER MPØØ317

REVISIONS		
REV.	A	
CHG. NO.	MM11-YP-1	
DATE	10-77	

EN-01124-16-MAY78-(327)

USED ON OPTION/MODEL	
SHEET 1 OF 1	

DRN.	E. DeVeres	DATE	18 May 77
CHK'D	R. Rudelle	DATE	18 MAY 77
PROJ. ENG.	W Coates	DATE	20 APR 77
FIELD SERV.	J. Holdsworth	DATE	8 June 77

digital

TITLE: MM11-YP MEMORY MODULE

SIZE	CODE	NUMBER	REV.
B	TC	MM11-YP-1	A

DIST.

DRB 124

BLANK

"THE MATERIAL HEREIN IS FOR INFORMATION PURPOSES ONLY AND IS SUBJECT TO CHANGE WITHOUT NOTICE. DIGITAL EQUIPMENT CORPORATION ASSUMES NO RESPONSIBILITY FOR ANY ERRORS WHICH MAY APPEAR HEREIN."

DRAWING DIRECTORY

"THIS DRAWING AND SPECIFICATIONS, HEREIN, ARE THE PROPERTY OF DIGITAL EQUIPMENT CORPORATION AND SHALL NOT BE REPRODUCED OR COPIED OR USED IN WHOLE OR IN PART AS THE BASIS FOR THE MANUFACTURE OR SALE OF ITEMS WITHOUT WRITTEN PERMISSION. COPYRIGHT © DIGITAL EQUIPMENT CORPORATION.

NOTE: FIELD MAINTENANCE PRINT SET SEE: MPØØ317

UNIT VARIATIONS

VAR	TITLE
MM11-YP	32K X 18 BIT MEMORY/MODULE

REVISIONS	
REV.	A
CHANGE NO.	MM11YP-2
CHK	

USED ON OPTION/MODEL

SHEET 1 OF 2

DRN.	E. DeVeres	DATE	18 May 77
CHK'D.	D. Rudelle	DATE	18 MAY 77
PROJ. ENG.	W Coates	DATE	20 APR 77
PROD.	Pa Hill	DATE	21 MAY 77

TITLE digital

MM11-YP MEMORY MODULE

SIZE	CODE	NUMBER	REV
B	DD	MM11-YP	A

DIST.

DRB 106A

ML

FIND NO.	DRAWING NO.	DESCRIPTION	TYPE
1	MPØØ317	MM11-YD PRINT SET	REF
	B-TC-MM11-YP-1	MM11-YP FIELD MAINT. PRINT SET	REF
	D-UA-MM11-YP-Ø	MM11-YP MEMORY MODULE ASSY	E/M
	D-TD-MM11-YP-2	MM11-YP TIMING DIAGRAM	REF
2	E-UA-H228-B-Ø	H228-B CORE MEMORY STACK ASSY	E/M
	B-DD-H228-B	H228 CORE MEMORY STACK	REF
	D-UA-5412149-0-0	32K SPC MEMORY	
3	D-UA-G657-Ø-Ø	32K SPC ELECTRONICS	E/M
	B-DD-G657-Ø	32K SPC ELECTRONICS	REF
4	D-AD-7013560-0-0	CONN JUMPER ASSY	M
	C-IA-7417954-0-0	CONN ASSY	E/M
	D-PS-1213577-0-0	COVER HOUSING	M

FIND NO.	DRAWING NO.	DESCRIPTION	TYPE

TYPE: E ELECTRICAL
M MECHANICAL
E/M ELECTRO/MECHANICAL

digital

TITLE MM11-YP MEMORY MODULE

SHEET 2 OF 2 | SIZE B | CODE DD | NUMBER MM11-YP | REV A

DRB 108A

ML

SIZE	CODE	NUMBER	REV.
B	DD	G657-0	A

DRAWING NO.	NO. OF SHTS	PART NO.	DESCRIPTION	REVISIONS
B-DD-G657-0	1		32K SPC ELECTRONICS	* A
D-UA-G657-0-0	6		32K SPC ELECTRONICS	B C
K-PL-G657-0-DBP	4		32K SPC ELECTRONICS	B C
D-CS-G657-0-1	18		32K SPC ELECTRONICS	B C
D-MD-5012147-0-0	8		DRILL & ETCH DRAWING	B B
		5012147	ETCHED BOARD	C C
G657-0-L			P.C. DESIGN DATA BASE	REF -
G657-0-PL			INSERTION P/L DATA BASE	REF -

NOTES:

REVISIONS	DATE	CHG NO.	REV.
	7-78	00001	A

"THIS DRAWING AND SPECIFICATIONS, HEREIN, ARE THE PROPERTY OF DIGITAL EQUIPMENT CORPORATION AND SHALL NOT BE REPRODUCED OR COPIED OR USED IN WHOLE OR IN PART AS THE BASIS FOR THE MANUFACTURE OR SALE OF ITEMS WITHOUT WRITTEN PERMISSION.
COPYRIGHT © 1977, DIGITAL EQUIPMENT CORPORATION"

digital

USED ON OPTION/MODEL
MM11-YP

DRN.	LORA METZGER	28 APR 77
CHK'D	R. Mannion 29 APR 77	29 APR 77
ENG.	W. Coates	29 APR 77
PROD.	Ra Hill	29 Apr 77

TITLE: 32K SPC ELECTRONIC

SIZE	CODE	NUMBER	REV.
B	DD	G657-0	A

SHEET 1 OF 1

DRB 126 EN-01149-16-N176(325)

"THIS DRAWING AND SPECIFICATIONS, HEREIN, ARE THE PROPERTY OF DIGITAL EQUIPMENT CORPORATION AND SHALL NOT BE REPRODUCED OR COPIED OR USED IN WHOLE OR IN PART AS THE BASIS FOR THE MANUFACTURE OR SALE OF ITEMS WITHOUT WRITTEN PERMISSION. COPYRIGHT © 1977, DIGITAL EQUIPMENT CORPORATION"

MMII-YP TIMING

TIME (N.SEC.)

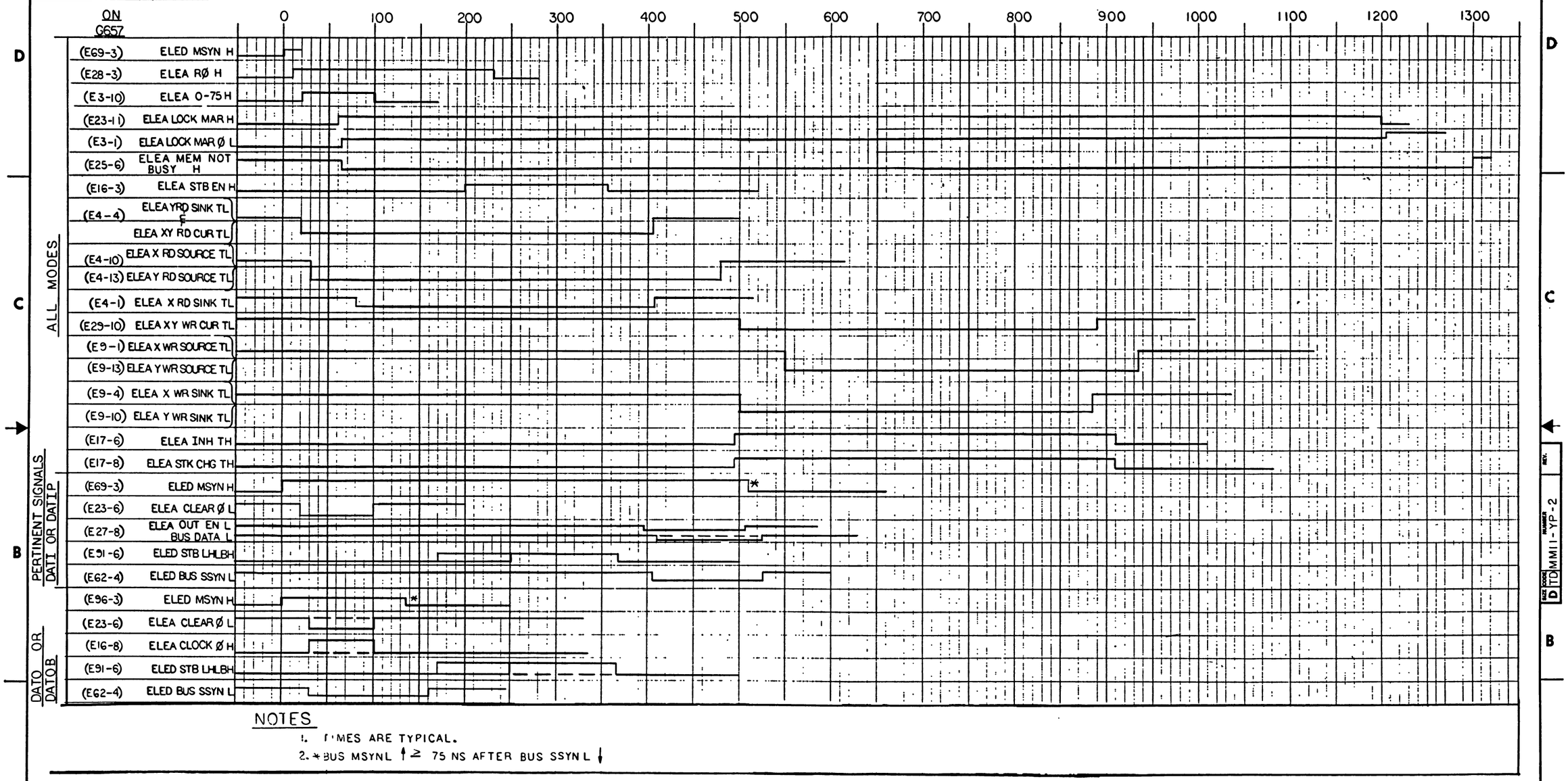

NOTES

1. TIMES ARE TYPICAL.
2. * BUS MSYNL ↑ ≥ 75 NS AFTER BUS SSYN L ↓

DRN. E. DeVeau	28 Jan 77	FIRST USED ON MMII-YP
CHK'D R. Thomas	29 APR 77	digital
ENG. W Carter	29 APR 77	TITLE MMII-YP TIMING DIAGRAM
PROJ. ENG. W Carter	29 APR 77	
PROD. R.G. Hill	29 Apr 77	
NEXT HIGHER ASSY.		
B-DD-MMII-YP		SIZE D CODE TD NUMBER MMII-YP-2 REV.
SCALE NONE		
SHEET 1 OF 2		DIST.

REVISIONS: REV. / CHANGE NO. / CHK.

B.S.R. 2-160

DGC FORM NO. DGC 340-0

"THIS DRAWING AND SPECIFICATIONS, HEREIN, ARE THE PROPERTY OF DIGITAL EQUIPMENT CORPORATION AND SHALL NOT BE REPRODUCED OR COPIED OR USED IN WHOLE OR IN PART AS THE BASIS FOR THE MANUFACTURE OR SALE OF ITEMS WITHOUT WRITTEN PERMISSION. COPYRIGHT © 1977, DIGITAL EQUIPMENT CORPORATION"

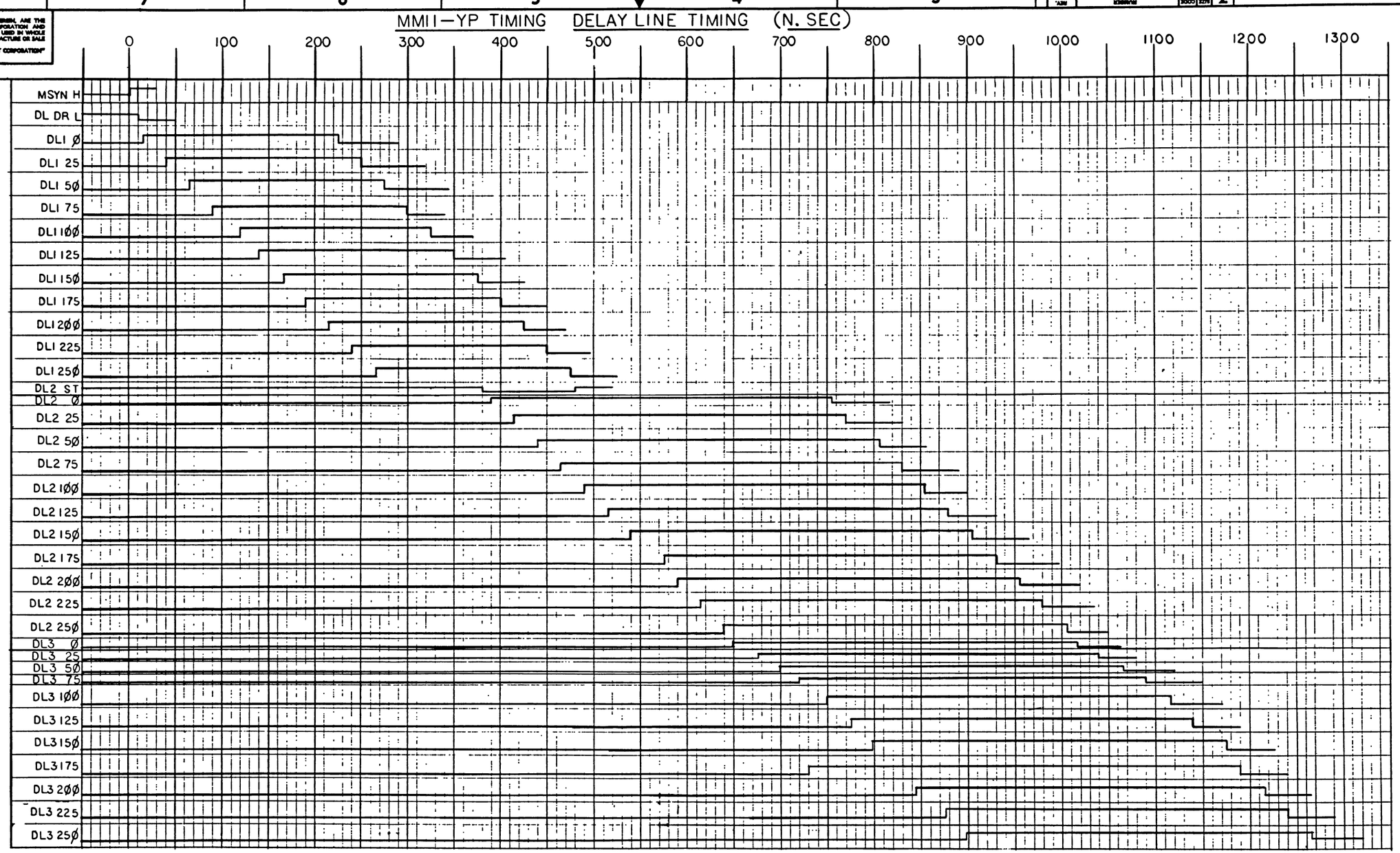

DRN. E. DeVeiso	28 Jan 77	FIRST USED ON MMII-YP	digital
CHK'D R. Morris	29 APR 77	TITLE MMII-YP TIMING DIAGRAM	
ENG. W. Coates	29 APR 77		
PROJ. ENG. W. Coates	29 APR 77		
PROD. RA Hill	29 Apr 77		
NEXT HIGHER ASSY. B-DD-MMII-YP		SIZE D CODE TD NUMBER MMII-YP-2	REV.
SCALE NONE			
SHEET 2 OF 2		DIST.	

REVISIONS: REV. / CHANGE NO. / CHK

SIZE D CODE TD NUMBER MMII-YP-2 REV.

DRAWING AND SPECIFICATIONS, HEREIN, ARE THE PROPERTY OF DIGITAL EQUIPMENT CORPORATION AND SHALL NOT BE REPRODUCED OR COPIED OR USED IN WHOLE OR IN PART AS THE BASIS FOR THE MANUFACTURE OR SALE OF ITEMS WITHOUT WRITTEN PERMISSION. COPYRIGHT © 1977 , DIGITAL EQUIPMENT CORPORATION

NOTES:
1. FLAT WASHER IS NEXT TO CONN. JUMPER ASSY.

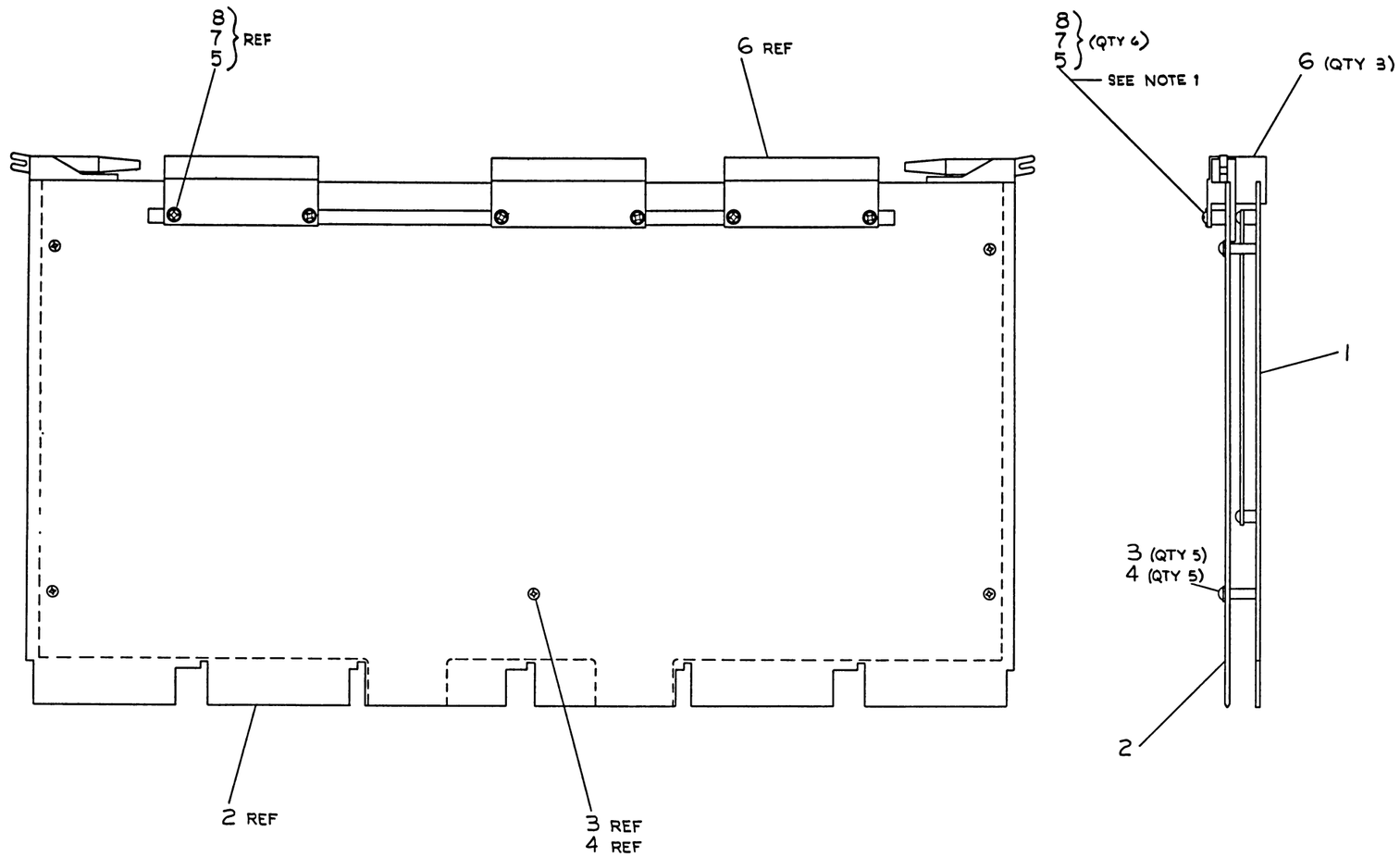

6	WASHER, LOCK .162 O.D X .094 I.D.	9006686	8
6	WASHER, FLAT .250 O.D. X .094 I.D.	9008877	7
3	CONN JUMPER ASSY	D-AD-7013560-0-0	6
6	SCR, METAL, #2-56 X .25 LG	9006001-01	5
5	WASHER, LOCK, #2 INT TOOTH	9006631-00	4
5	SCR, PHL PAN HD, #2-56 X .19	9006000-01	3
1	32K SPC ELECT	D-UA-G657-0-0	2
1	H228 STACK BOARD (18 BIT)	E-UA-H228-B-0	1
	DESCRIPTION	DWG./PART NO.	ITEM NO.

UNLESS OTHERWISE SPECIFIED DIMENSIONS ARE IN INCHES

ANGLES ±0° 30'	CLASS OF ACCURACY (CHECK ONE)	NOMINAL DIMENSION RANGE INCHES					
		OVER 0 TO 0.2	OVER 0.2 TO 1.2	OVER 1.2 TO 4.0	OVER 4.0 TO 12.0	OVER 12.0 TO 40.0	OVER 40.0 TO 80.0
SURFACE QUALITY IN MICROINCHES	MEDIUM	±.004	±.008	±.012	±.016	±.024	±.04
	PREFERRED	±.012	±.016	±.025	±.04	±.063	±.1

MMII-YP

QUANTITY & VARIATION

THIRD ANGLE PROJECTION

REMOVE BURRS AND BREAK SHARP CORNERS

DO NOT SCALE DWG

MATERIAL SEE PARTS LIST

FINISH

DRN. R.E. Hall 28 MAR 77
CHK'D D. Burcke 17 MAY 77
ENG. W. Coates 20 APR 77
PROJ. ENG. W. Coates 20 APR 77
PROD. R.A. Hall 19 MAY 77

FIRST USED ON MMII-YP

digital

TITLE MMII-YP MEMORY MODULE ASSEMBLY

NEXT HIGHER ASSY. B-DD-MMII-YP

SCALE NONE

SHEET 1 OF 1

SIZE	CODE	NUMBER	REV.
D	UA	MMII-YP-0	A

DIST.

REVISIONS

CHK	CHANGE NO.	REV.
EB	MMIIYP-00002	A
D. Burcke 7 Jun 77		
W. COATES		
W. Coates 7-14-78		

DEC FORM NO. DEC 100-0

ML

digital EQUIPMENT CORPORATION MAYNARD MASSACHUSETTS

DRAWING DIRECTORY

"THIS DRAWING AND SPECIFICATIONS, HEREIN, ARE THE PROPERTY OF DIGITAL EQUIPMENT CORPORATION AND SHALL NOT BE REPRODUCED OR COPIED OR USED IN WHOLE OR IN PART AS THE BASIS FOR THE MANUFACTURE OR SALE OF ITEMS WITHOUT WRITTEN PERMISSION. COPYRIGHT © 1977 , DIGITAL EQUIPMENT CORPORATION"

CUSTOMER PRINT SET INDEX

SEQUENCE

SEQUENCE

THIS IS PRINT SET

FOR FIELD MAINTENANCE PRINT SET REFER
TO MPØØ 317

UNIT VARIATIONS		PRINT SET
VAR	TITLE	

REVISION	REV	CHG. N	DATE

USED ON OPTION/MODEL	
MM11-YP	

DRN. E. DeVeres	DATE 4-mar 77	TITLE H228 CORE MEMORY STACK	
CHK'D. W. [illegible]	DATE 6 MAR 77		
PROJ ENG. W. Coates	DATE 29 APR 77		
PROD. RA Hill	DATE 29 MAY 77	SIZE B / CODE DD / NUMBER H228-B	REV
FIELD SERV.	DATE	DIST	

SHEET 1 OF 3

DRB 106

EM-01062-1A-16-MAR-1977-(2251)

"THIS DRAWING AND SPECIFICATIONS, HEREIN, ARE THE PROPERTY OF DIGITAL EQUIPMENT CORPORATION AND SHALL NOT BE REPRODUCED OR COPIED OR USED IN WHOLE OR IN PART AS THE BASIS FOR THE MANUFACTURE OR SALE OF ITEMS WITHOUT WRITTEN PERMISSION.
COPYRIGHT © 1977 DIGITAL EQUIPMENT CORPORATION"

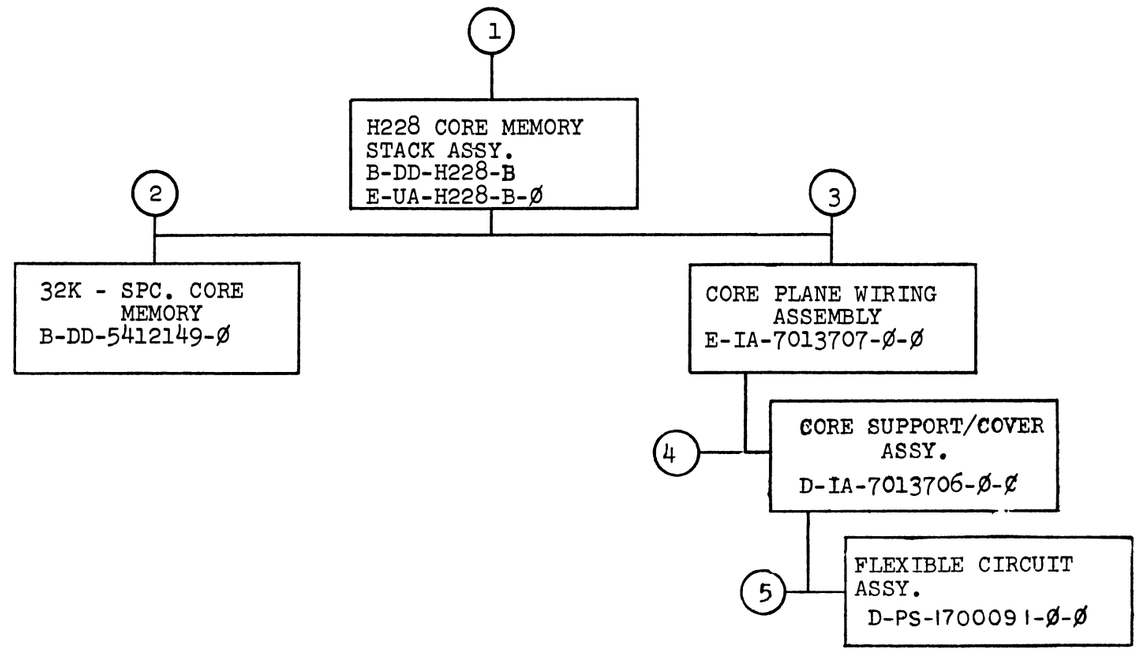

TITLE		SIZE	CODE	NUMBER	REV
H228 CORE MEMORY STACK	SHEET 2 OF 3	B	DD	H228-B	

DRB 107

FIND NO.	DRAWING NO.	DESCRIPTION	TYPE
1	MP00317	FIELD MAINTENANCE PRINT SET (MP)	-
	B-TC-H228-B-1	FIELD MAINTENANCE PRINT SET (TC)	-
	B-DD-H228-B	H228 CORE MEMORY STACK (DD)	M
	E-UA-H228-B-Ø	H228 CORE MEMORY STACK ASSY.	M
	D-PS-1214237-Ø-Ø	STIFFENER, SPACER (32K SPC)	M
2	B-DD-5412149-Ø	32K - SPC CORE MEMORY (DD)	E
3	E-IA-7013707-Ø-Ø	CORE PLANE WIRING ASSY.	E
5	D-PS-1700091-Ø-Ø	FIEXIBLE CIRCUIT ASSY.	E
	D-CS-5412743-Ø-1	FLEXIBLE CIRCUIT SCHEMATIC	E
4	D-IA-7013706-Ø-Ø	CORE SUPPORT/COVER ASSY.	M
	D-MD-7418246-Ø-Ø	COVER (32K - SPC.)	M
	D-MD-7418245-Ø-Ø	CORE SUPPORT (32K - SPC.)	M

FIND NO.	DRAWING NO.	DESCRIPTION	TYPE

TYPE: E ELECTRICAL
M MECHANICAL
E/M ELECTRO/MECHANICAL

digital

TITLE	SHEET	SIZE	CODE	NUMBER	REV
H228 CORE MEMORY STACK	3 OF 3	B	DD	H228-B	

DRB 108A

"THIS DRAWING AND SPECIFICATIONS, HEREIN, ARE THE PROPERTY OF DIGITAL EQUIPMENT CORPORATION AND SHALL NOT BE REPRODUCED OR COPIED OR USED IN WHOLE OR IN PART AS THE BASIS FOR THE MANUFACTURE OR SALE OF ITEMS WITHOUT WRITTEN PERMISSION. COPYRIGHT © [illegible] DIGITAL EQUIPMENT CORPORATION"

NOTE:
IC 7520
GND PIN-9
+5V PIN-16

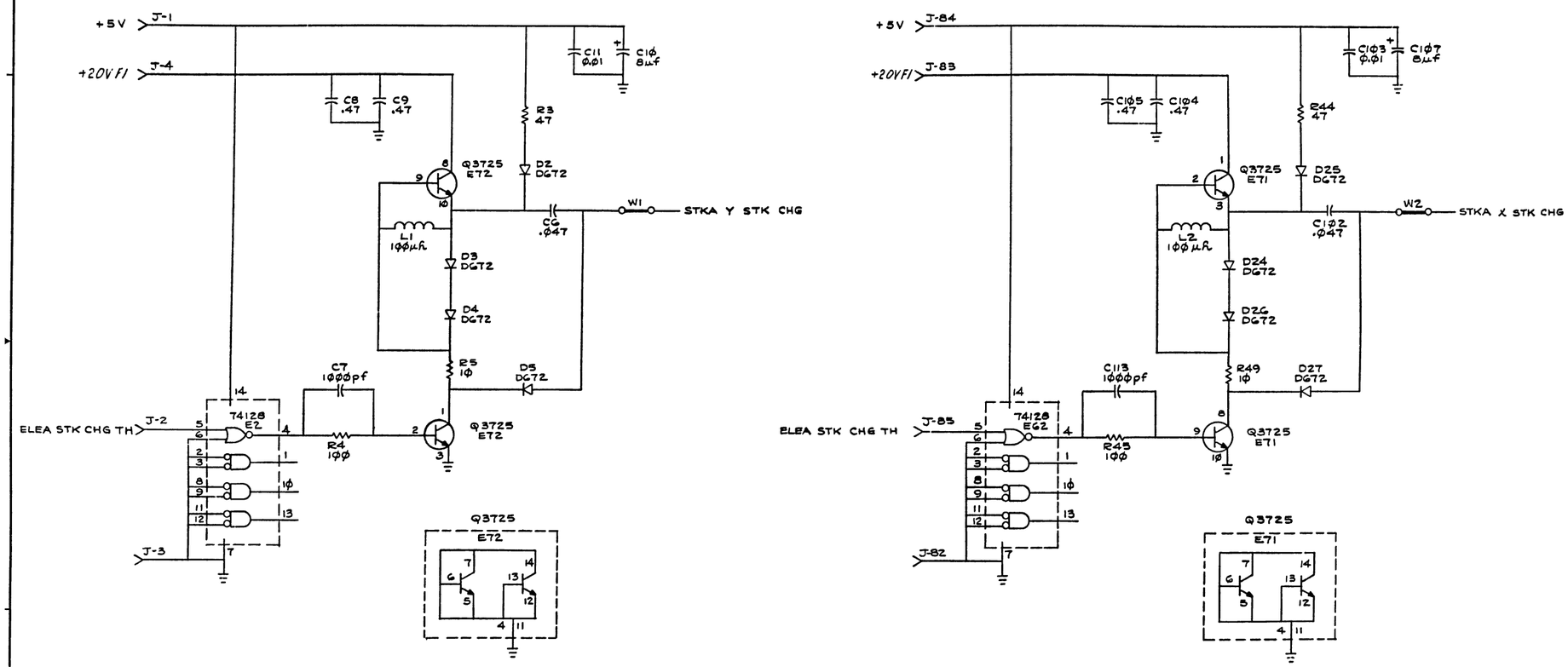

REVISIONS			
CHK	CHANGE NO.		REV.
EC	F-12149	ML/OT	D
	12-07-78		
	W COATES		
	11-9-78		

DRN			FIRST USED ON H228B
CHK'D			digital
ENG			TITLE 32K SPC MEMORY (STKA)
PROJ ENG			
PROD			
NEXT HIGHER ASSY.	B-DD-5412149-0		SIZE D CODE CS NUMBER 5412149-0-1 REV. D
SCALE			
SHEET 1 OF 16			DIST

"THIS DRAWING AND SPECIFICATIONS, HEREIN, ARE THE PROPERTY OF DIGITAL EQUIPMENT CORPORATION AND SHALL NOT BE REPRODUCED OR COPIED OR USED IN WHOLE OR IN PART AS THE BASIS FOR THE MANUFACTURE OR SALE OF ITEMS WITHOUT WRITTEN PERMISSION. COPYRIGHT © 1976 "DIGITAL EQUIPMENT CORPORATION"

NOTE:
Y LINE Ø CAN HAVE
A CURRENT LOOP

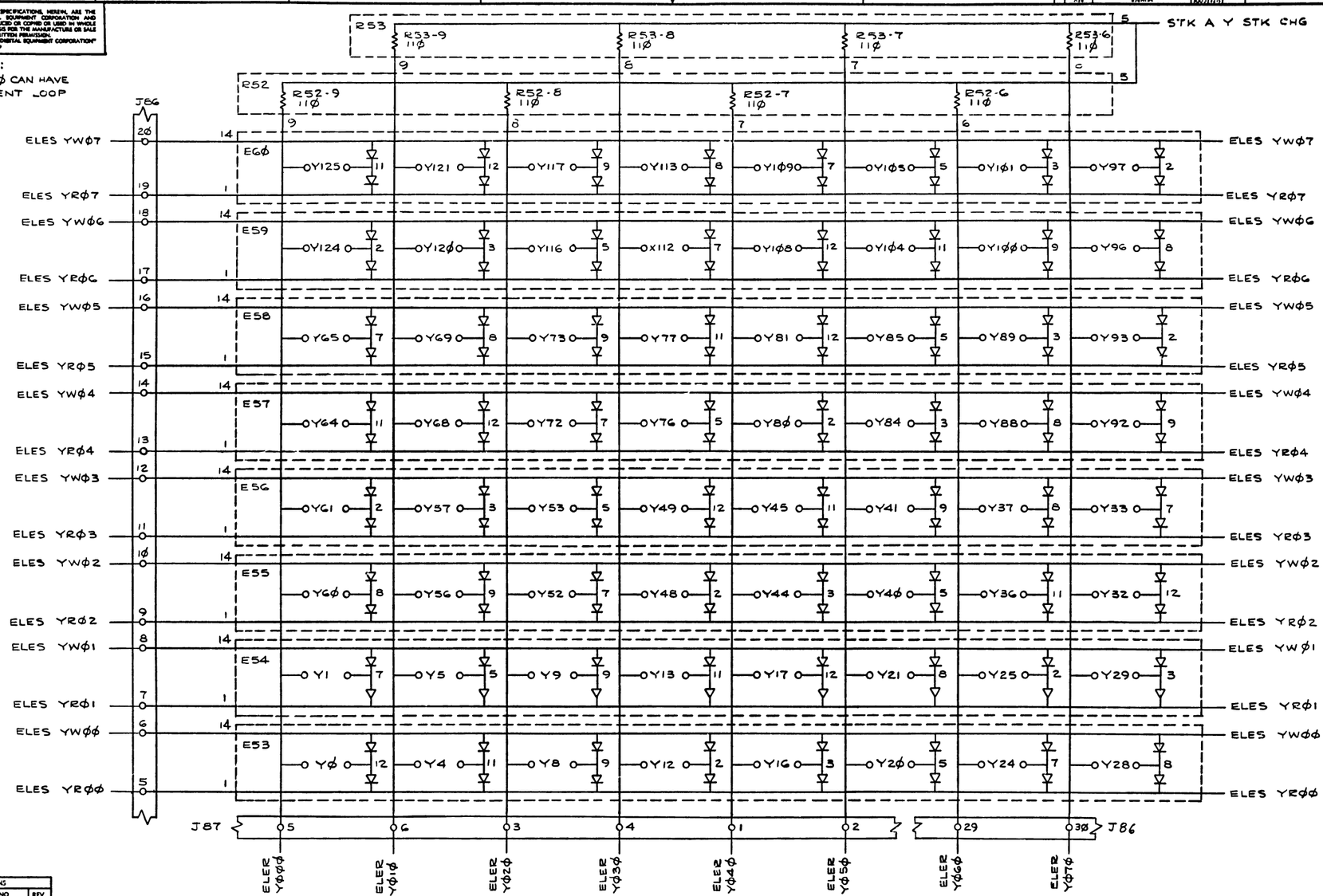

REVISIONS		
CHK	CHANGE NO	REV

TITLE	SIZE	CODE	NUMBER	REV
32K SPC MEMORY (STKB)	D	CS	5412149-Ø-1	D
SCALE — / —	SHEET 2 OF 16		DIST	

DEC FORM NO. DRD 130

"THIS DRAWING AND SPECIFICATIONS, HEREIN ARE THE PROPERTY OF DIGITAL EQUIPMENT CORPORATION AND SHALL NOT BE REPRODUCED OR COPIED OR USED IN WHOLE OR IN PART AS THE BASIS FOR THE MANUFACTURE OR SALE OF ITEMS WITHOUT WRITTEN PERMISSION COPYRIGHT © 1976 DIGITAL EQUIPMENT CORPORATION"

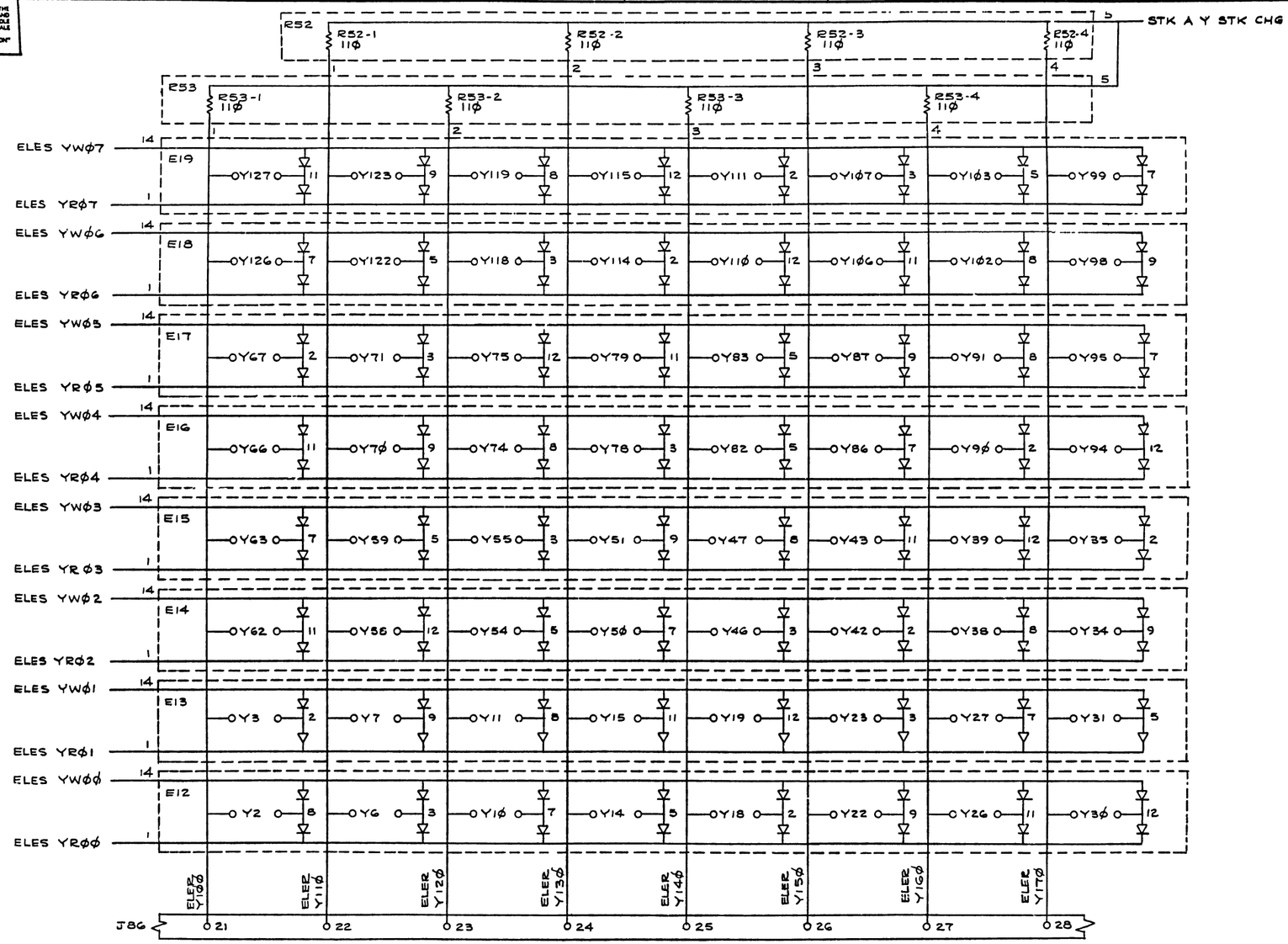

REVISIONS		
CHK	CHANGE NO	REV

TITLE	SIZE	CODE	NUMBER	REV.
32K SPC MEMORY (STKC)	D	CS	5412149-Ø-1	D
SCALE — / — SHEET 3 OF 16	DIST			

DEC FORM NO. DRD 138

"THIS DRAWING AND SPECIFICATIONS, HEREIN, ARE THE PROPERTY OF DIGITAL EQUIPMENT CORPORATION AND SHALL NOT BE REPRODUCED OR COPIED OR USED IN WHOLE OR IN PART AS THE BASIS FOR THE MANUFACTURE OR SALE OF ITEMS WITHOUT WRITTEN PERMISSION COPYRIGHT © 1976 DIGITAL EQUIPMENT CORPORATION"

NOTE:
X LINE Ø CAN HAVE
A CURRENT LOOP

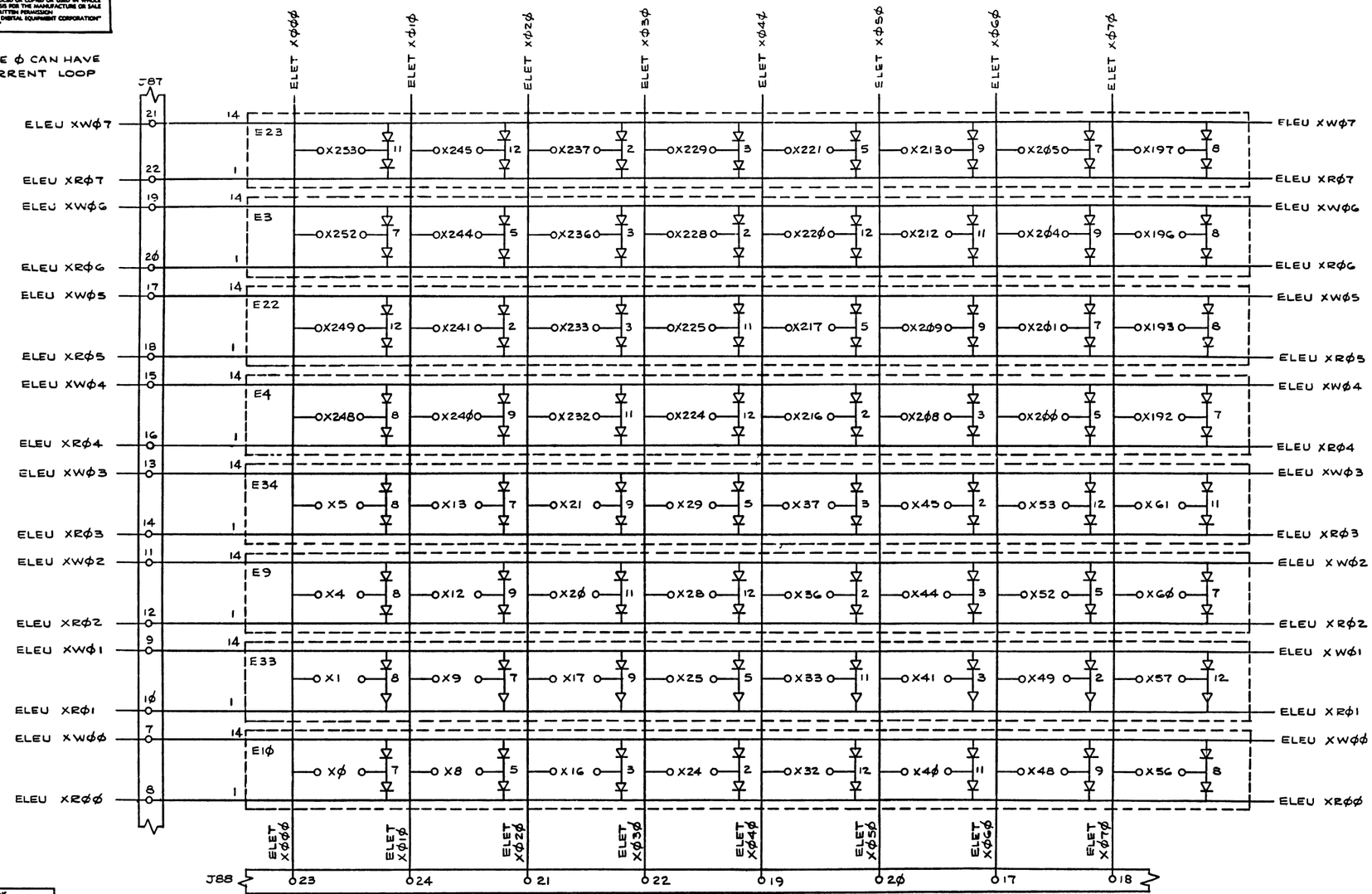

REVISIONS		
CHK	CHANGE NO	REV

TITLE	SIZE	CODE	NUMBER	REV.
32K SPC MEMORY (STKD)	D	CS	5412149-Ø-1	D

SCALE — SHEET 4 OF 16 DIST

DEC FORM NO. DRD 138

"THIS DRAWING AND SPECIFICATIONS, HEREIN, ARE THE PROPERTY OF DIGITAL EQUIPMENT CORPORATION AND SHALL NOT BE REPRODUCED OR COPIED OR USED IN WHOLE OR IN PART AS THE BASIS FOR THE MANUFACTURE OR SALE OF ITEMS WITHOUT WRITTEN PERMISSION. COPYRIGHT © 1976, DIGITAL EQUIPMENT CORPORATION"

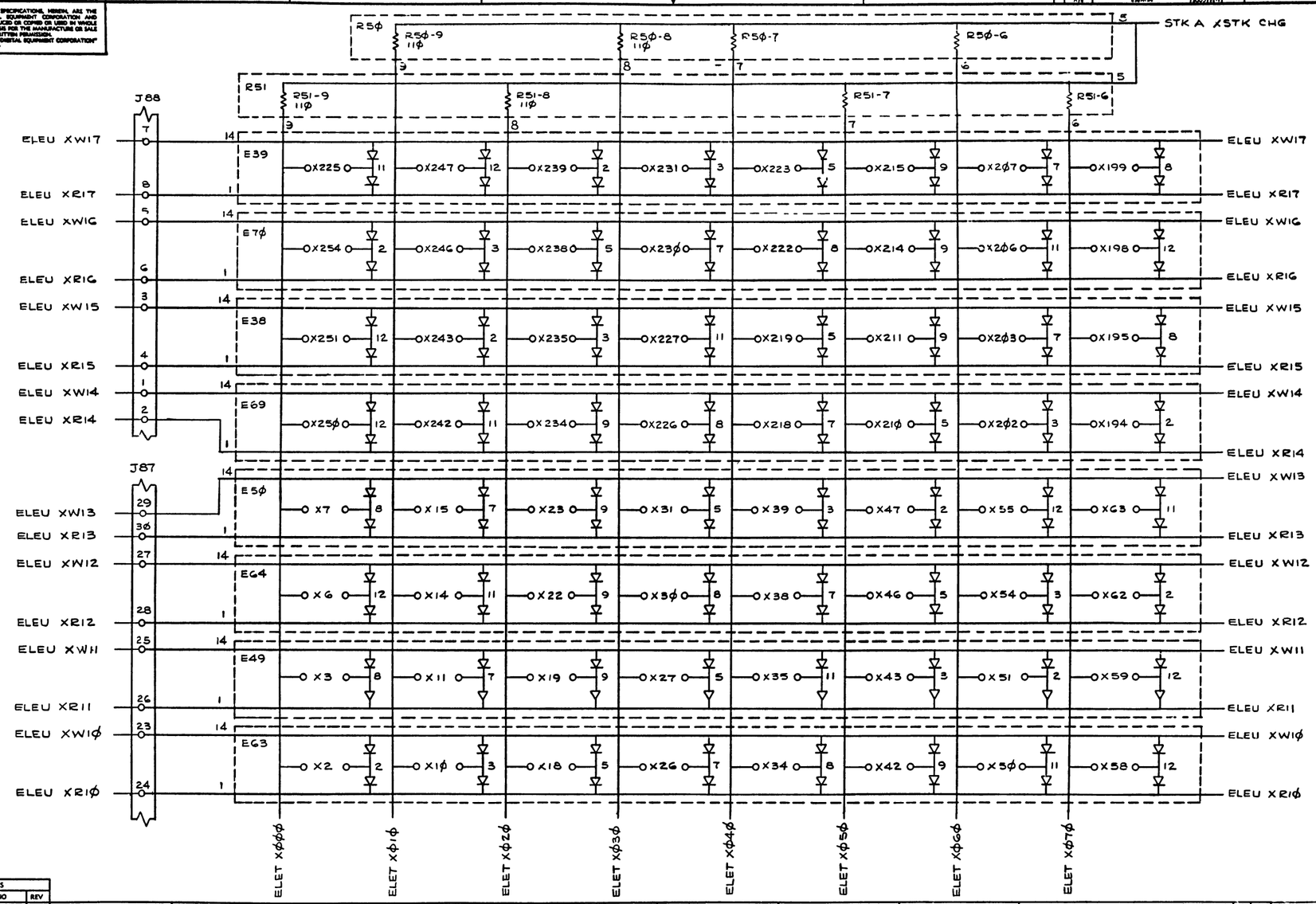

REVISIONS		
CHK	CHANGE NO	REV

TITLE	SIZE	CODE	NUMBER	REV.
32K SPC MEMORY (STKE)	D	CS	5412149-Ø-1	D
SCALE —	SHEET 5 OF 16	DIST		

"THIS DRAWING AND SPECIFICATIONS, HEREIN, ARE THE PROPERTY OF DIGITAL EQUIPMENT CORPORATION AND SHALL NOT BE REPRODUCED OR COPIED OR USED IN WHOLE OR IN PART AS THE BASIS FOR THE MANUFACTURE OR SALE OF ITEMS WITHOUT WRITTEN PERMISSION. COPYRIGHT © 1970 DIGITAL EQUIPMENT CORPORATION"

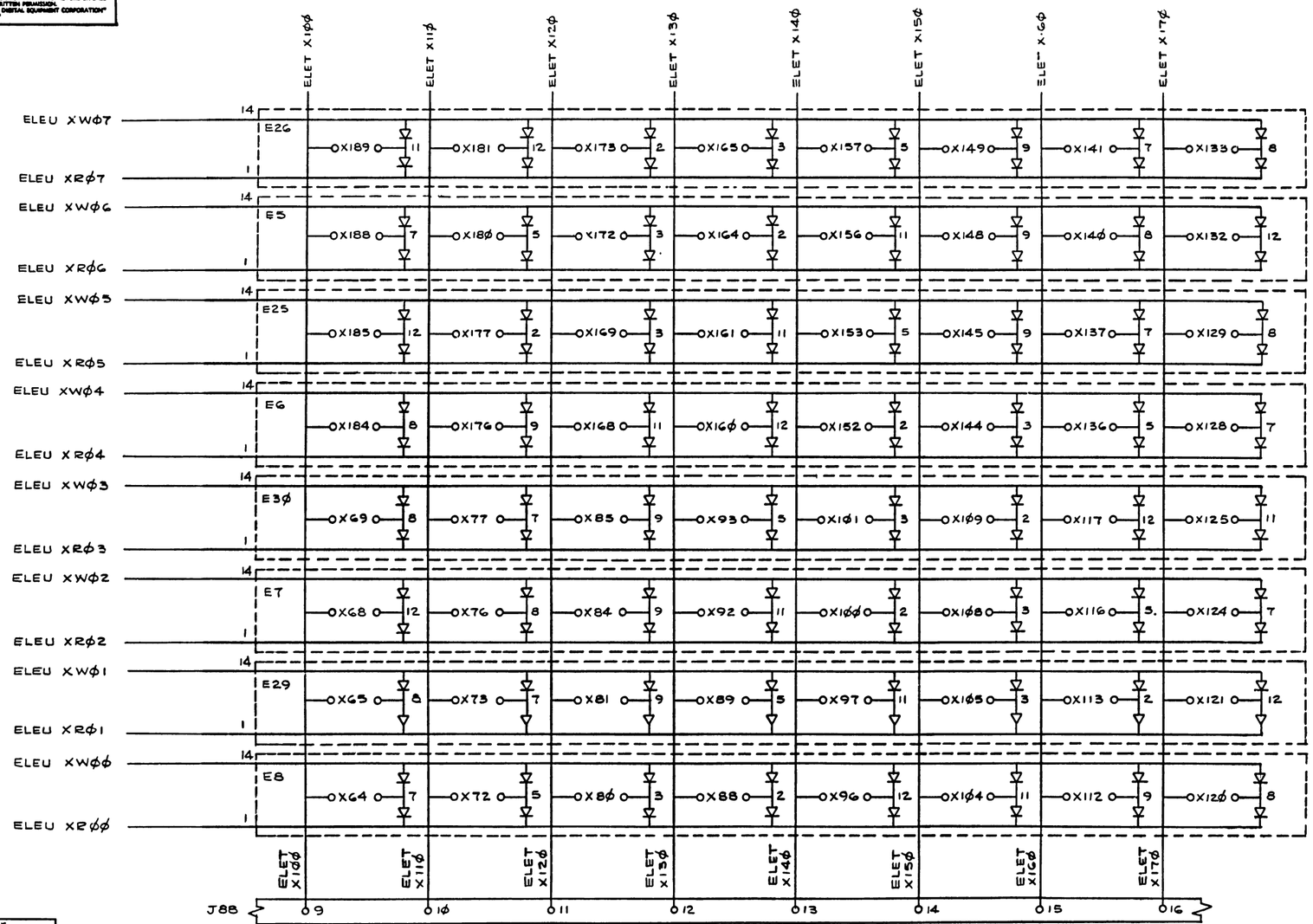

REVISIONS		
CHK	CHANGE NO	REV

TITLE	SIZE	CODE	NUMBER	REV.
32K SPC MEMORY (STKF)	D	CS	5412149-Ø-1	D
SCALE — / — SHEET 6 OF 16	DIST			

DEC FORM NO. DRD 128

"THIS DRAWING AND SPECIFICATIONS, HEREIN, ARE THE PROPERTY OF DIGITAL EQUIPMENT CORPORATION, AND SHALL NOT BE REPRODUCED OR COPIED OR USED IN WHOLE OR IN PART AS THE BASIS FOR THE MANUFACTURE OR SALE OF ITEMS WITHOUT WRITTEN PERMISSION. COPYRIGHT © 1976, DIGITAL EQUIPMENT CORPORATION"

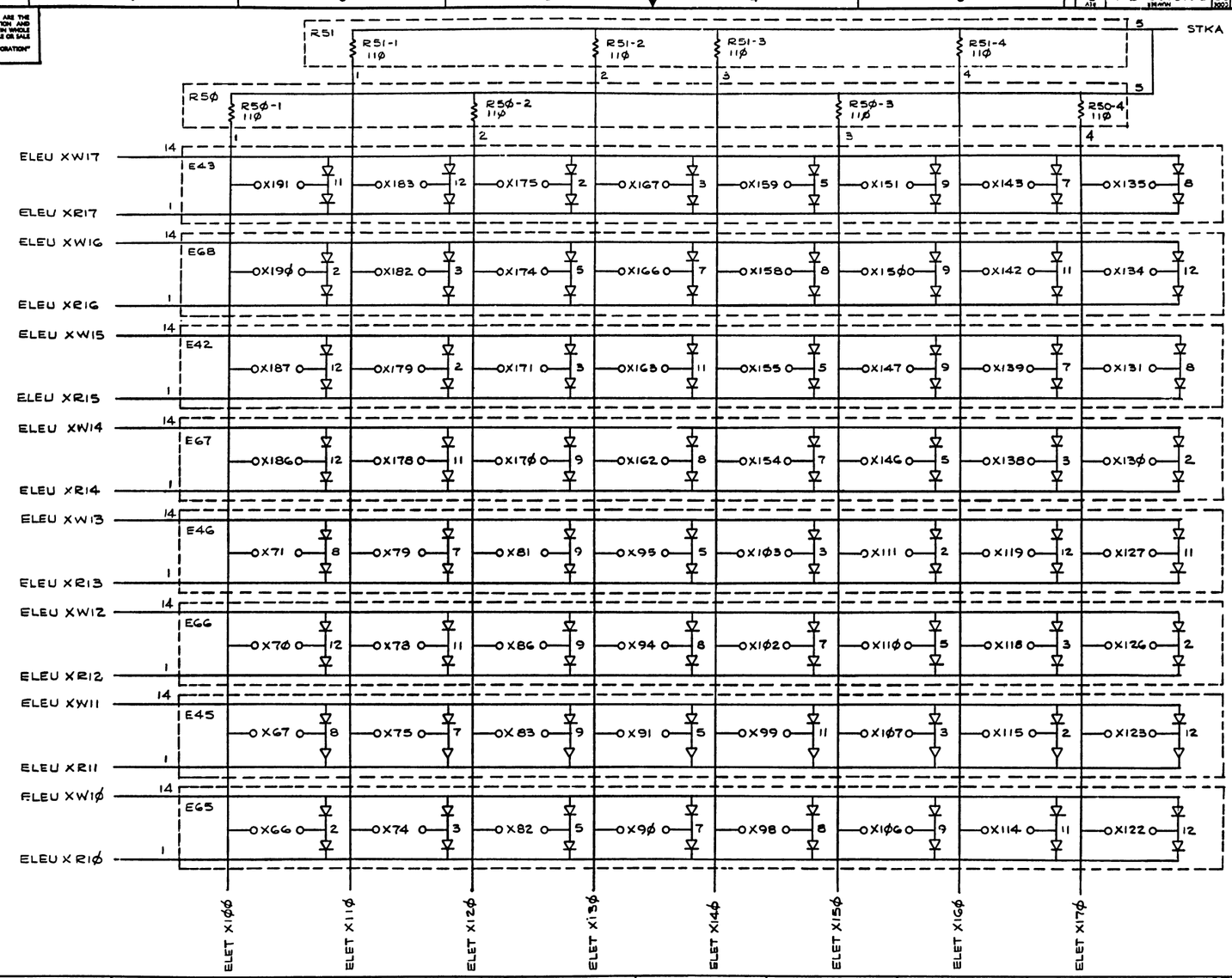

REVISIONS		
CHK	CHANGE NO	REV

TITLE 32K SPC MEMORY (STKH)

SIZE D CODE CS NUMBER 5412149-Ø-1 REV. D

SCALE — SHEET 7 OF 16 DIST

DEC FORM NO. DRD 128

"THIS DRAWING AND SPECIFICATIONS, HEREIN, ARE THE PROPERTY OF DIGITAL EQUIPMENT CORPORATION AND SHALL NOT BE REPRODUCED OR COPIED OR USED IN WHOLE OR IN PART AS THE BASIS FOR THE MANUFACTURE OR SALE OF ITEMS WITHOUT WRITTEN PERMISSION. COPYRIGHT © 1976, DIGITAL EQUIPMENT CORPORATION"

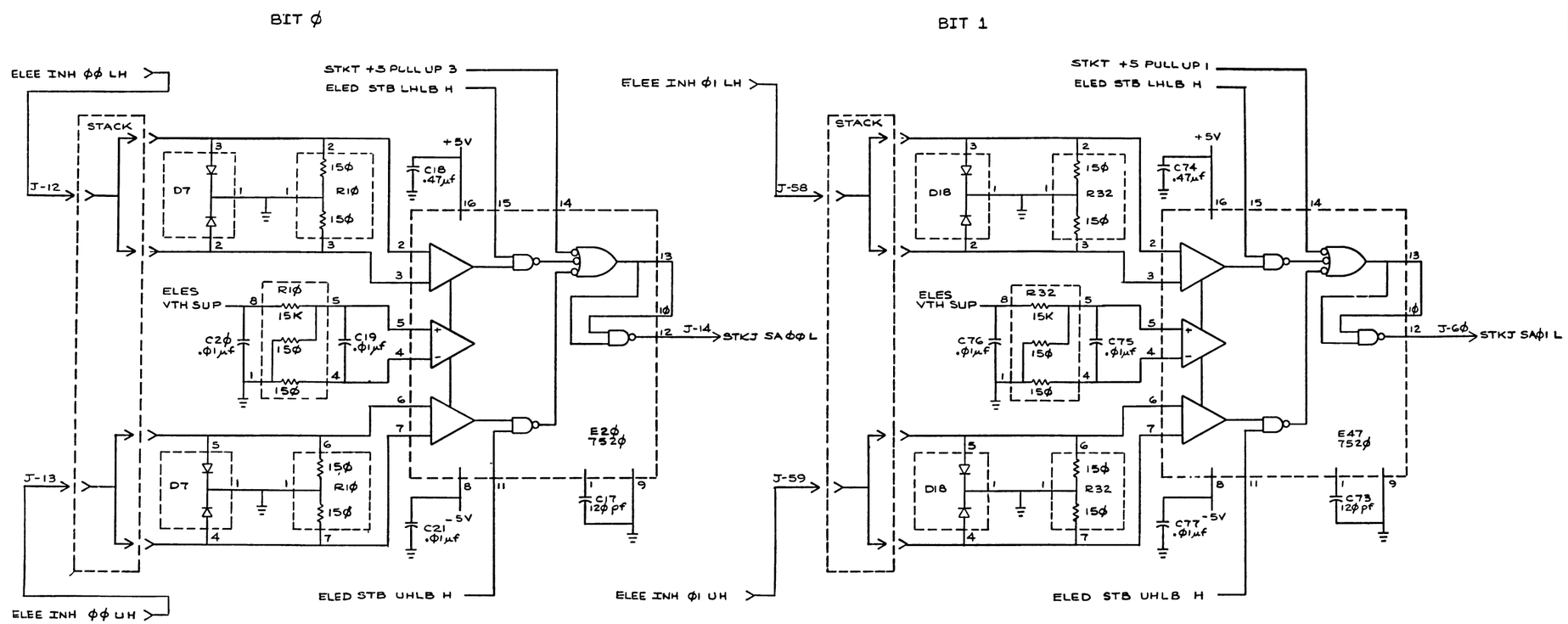

REVISIONS		
CHK	CHANGE NO	REV

TITLE SPC 32K (STKJ) MEMORY

SCALE — SHEET 8 OF 16

SIZE D CODE CS NUMBER 5412149-Ø-1 REV. D

DIST.

DEC FORM NO. DND 3 *8

"THIS DRAWING AND SPECIFICATIONS, HEREIN, ARE THE PROPERTY OF DIGITAL EQUIPMENT CORPORATION AND SHALL NOT BE REPRODUCED OR COPIED OR USED IN WHOLE OR IN PART AS THE BASIS FOR THE MANUFACTURE OR SALE OF ITEMS WITHOUT WRITTEN PERMISSION. COPYRIGHT © 1976 DIGITAL EQUIPMENT CORPORATION"

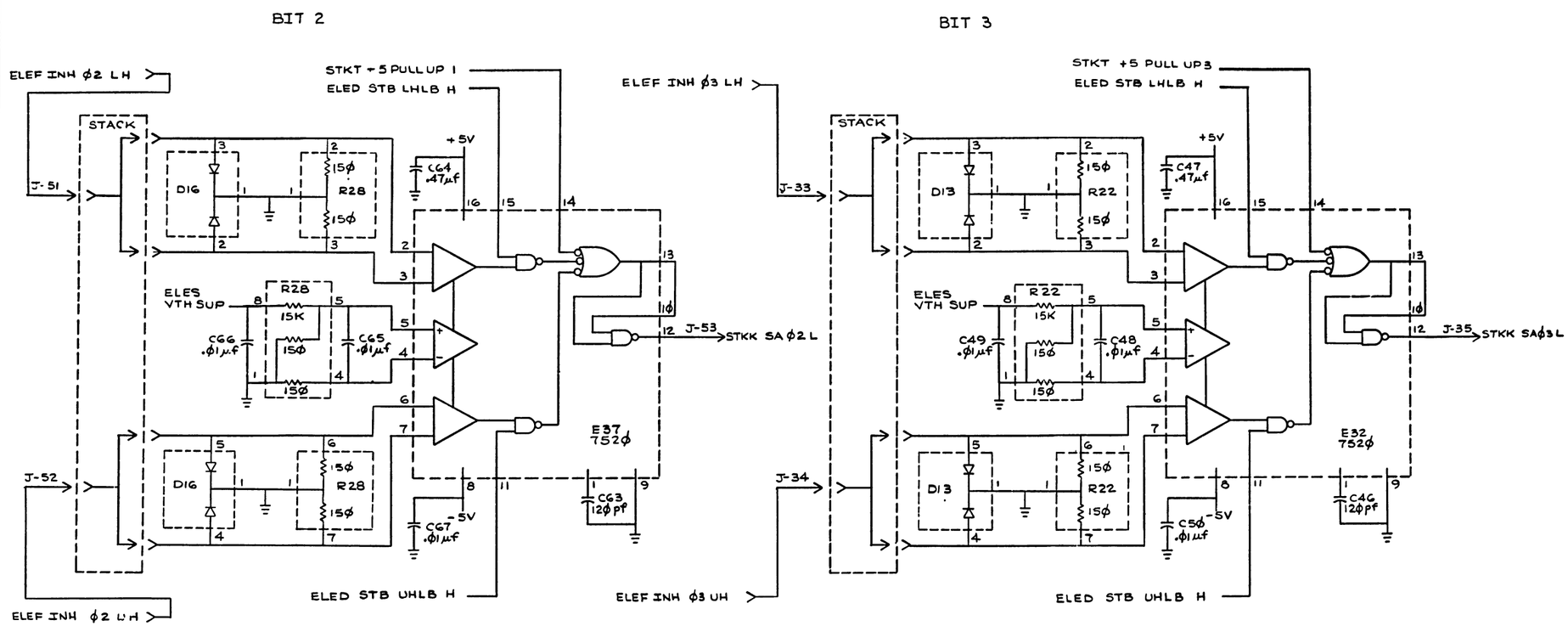

REVISIONS		
CHK	CHANGE NO	REV

TITLE	SIZE	CODE	NUMBER	REV.
SPC 32K (STKK) MEMORY	D	CS	5412149-Ø-1	D

SCALE — SHEET 5 OF 16 DIST.

DEC FORM NO. DRD 138

"THIS DRAWING AND SPECIFICATIONS, HEREIN, ARE THE PROPERTY OF DIGITAL EQUIPMENT CORPORATION AND SHALL NOT BE REPRODUCED OR COPIED OR USED IN WHOLE OR IN PART AS THE BASIS FOR THE MANUFACTURE OR SALE OF ITEMS WITHOUT WRITTEN PERMISSION. COPYRIGHT © 1976 DIGITAL EQUIPMENT CORPORATION"

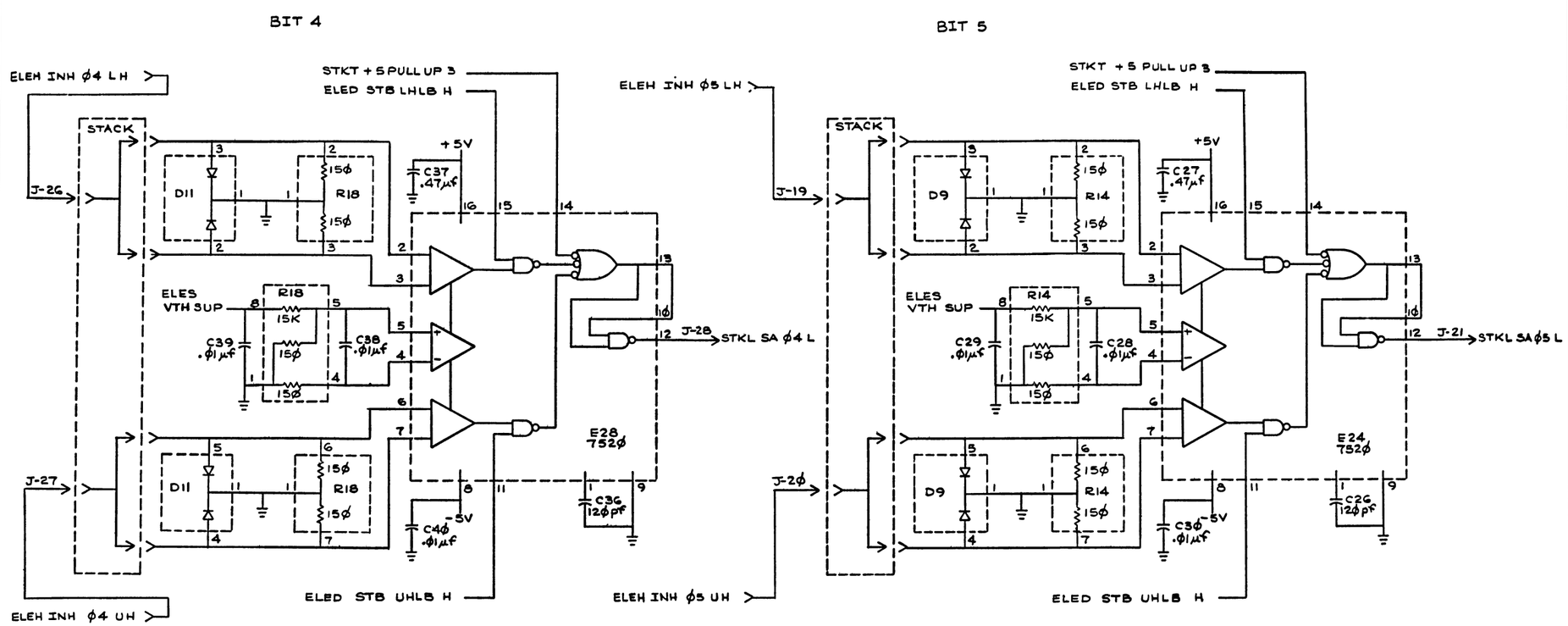

REVISIONS		
CHK	CHANGE NO	REV

TITLE	SIZE	CODE	NUMBER	REV.
SPC 32K (STKL) MEMORY	D	CS	5412149-Ø-1	D

SCALE — SHEET 13 OF 16 DIST.

DEC FORM NO. DRD 130

"THIS DRAWING AND SPECIFICATIONS, HEREIN, ARE THE PROPERTY OF DIGITAL EQUIPMENT CORPORATION AND SHALL NOT BE REPRODUCED OR COPIED OR USED IN WHOLE OR IN PART AS THE BASIS FOR THE MANUFACTURE OR SALE OF ITEMS WITHOUT WRITTEN PERMISSION. COPYRIGHT © 1976, DIGITAL EQUIPMENT CORPORATION"

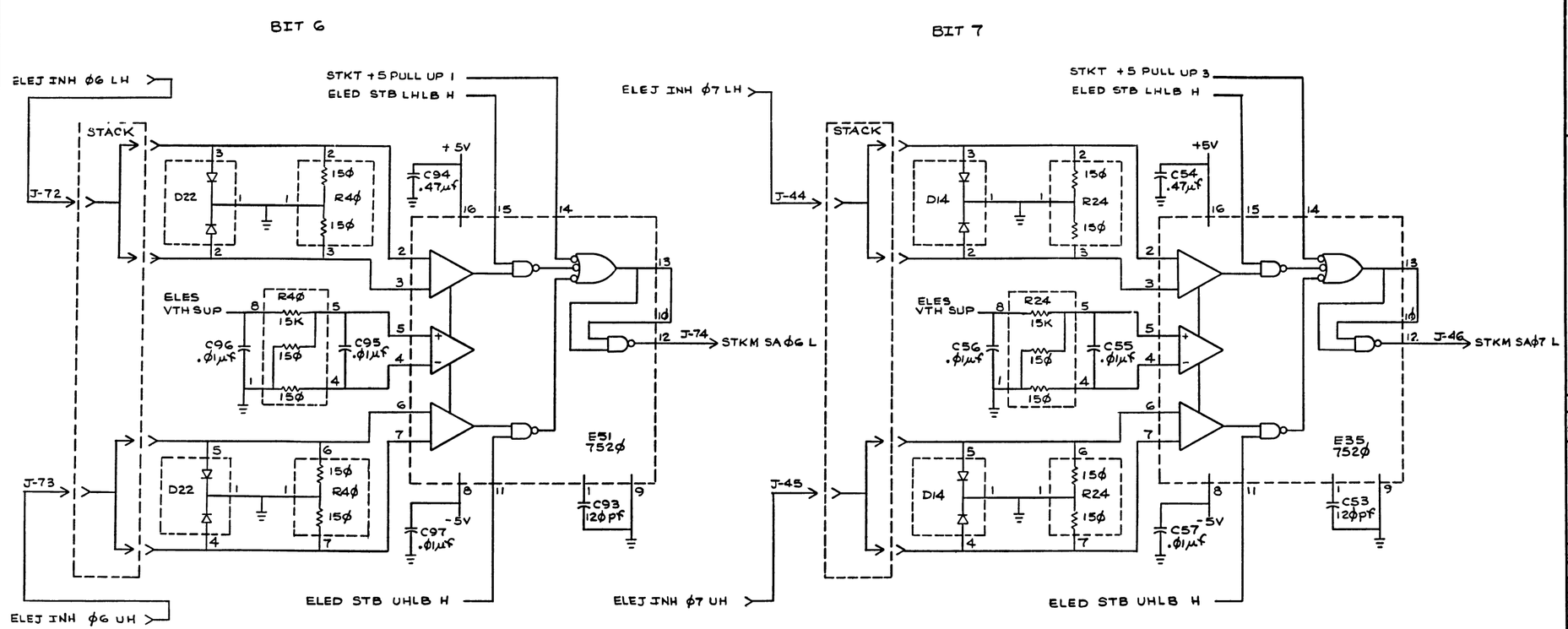

REVISIONS		
CHK	CHANGE NO	REV

TITLE SPC 32K (STKM) MEMORY

SCALE — SHEET 11 OF 16

SIZE D | CODE CS | NUMBER 5412149-Ø-1 | REV. D

D'ST.

DEC FORM NO. DRD 130

"THIS DRAWING AND SPECIFICATIONS, HEREIN, ARE THE PROPERTY OF DIGITAL EQUIPMENT CORPORATION AND SHALL NOT BE REPRODUCED OR COPIED OR USED IN WHOLE OR IN PART AS THE BASIS FOR THE MANUFACTURE OR SALE OF ITEMS WITHOUT WRITTEN PERMISSION. COPYRIGHT © 1970 DIGITAL EQUIPMENT CORPORATION"

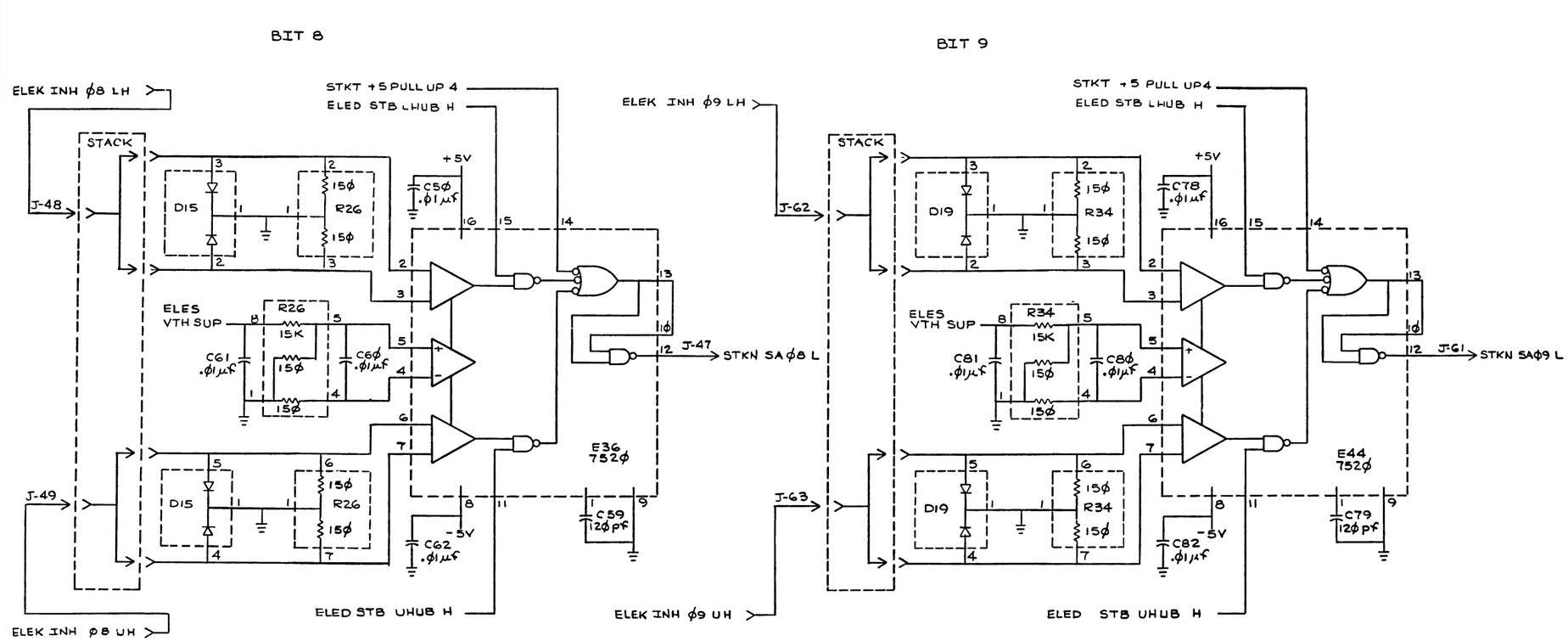

REVISIONS		
CHK	CHANGE NO	REV

TITLE SPC 32K (STKN) MEMORY

SIZE D CODE CS NUMBER 5412149-Ø-1 REV. D

SCALE — SHEET 12 OF 16 DIST

DEC FORM NO. DRD 130

"THIS DRAWING AND SPECIFICATIONS, HEREIN, ARE THE PROPERTY OF DIGITAL EQUIPMENT CORPORATION AND SHALL NOT BE REPRODUCED OR COPIED OR USED IN WHOLE OR IN PART AS THE BASIS FOR THE MANUFACTURE OR SALE OF ITEMS WITHOUT WRITTEN PERMISSION. COPYRIGHT © 1976 DIGITAL EQUIPMENT CORPORATION"

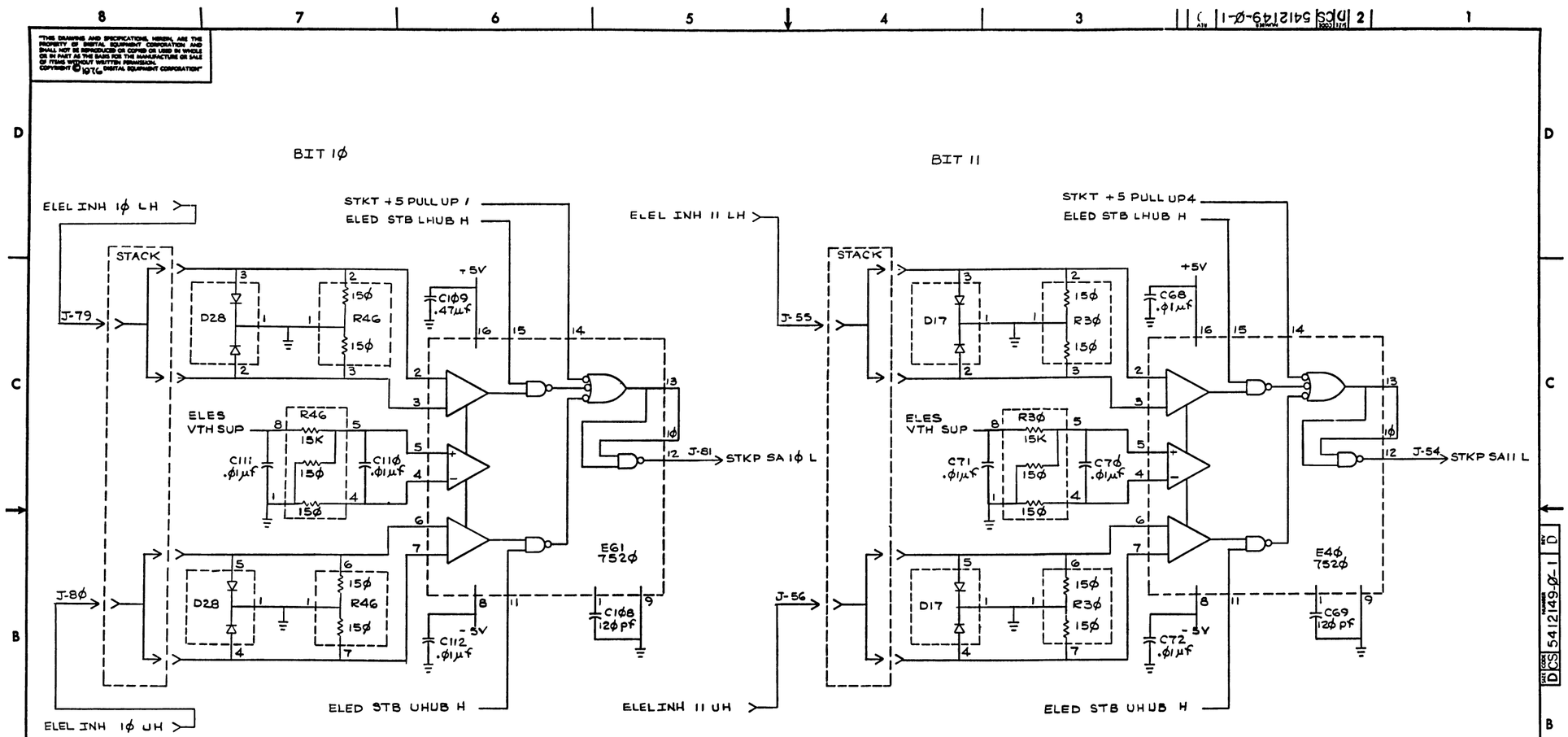

REVISIONS		
CHK	CHANGE NO	REV

TITLE SPC 32K (STKP) MEMORY

SIZE D CODE CS NUMBER 5412149-Ø-1 REV. D1

SCALE — SHEET 13 OF 16 DIST

DEC FORM NO. DRD 138

"THIS DRAWING AND SPECIFICATIONS, HEREIN, ARE THE PROPERTY OF DIGITAL EQUIPMENT CORPORATION AND SHALL NOT BE REPRODUCED OR COPIED OR USED IN WHOLE OR IN PART AS THE BASIS FOR THE MANUFACTURE OR SALE OF ITEMS WITHOUT WRITTEN PERMISSION. COPYRIGHT © 1976 DIGITAL EQUIPMENT CORPORATION"

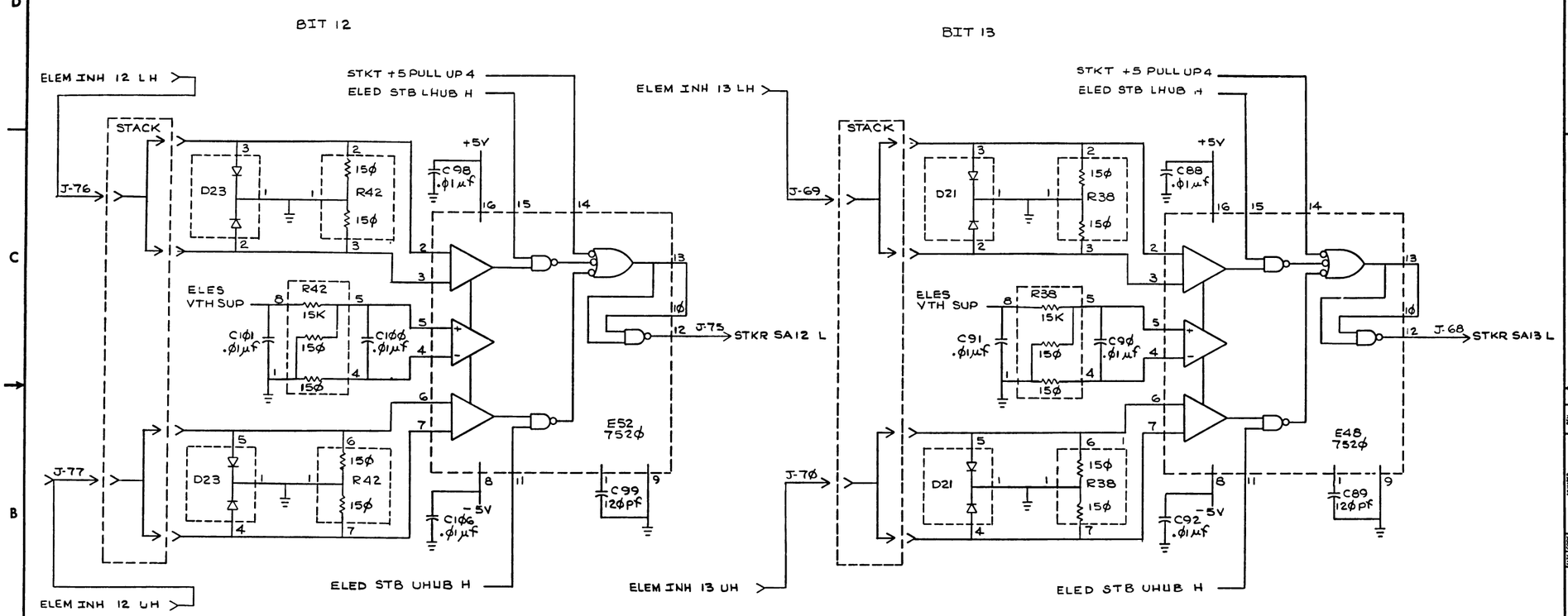

REVISIONS		
CHK	CHANGE NO	REV

TITLE	SIZE	CODE	NUMBER	REV.
SPC 32K (STKR) MEMORY	D	CS	5412149-Ø-1	D
SCALE — SHEET 14 OF 16	DIST			

DEC FORM NO. SRD 128

"THIS DRAWING AND SPECIFICATIONS, HEREIN, ARE THE PROPERTY OF DIGITAL EQUIPMENT CORPORATION AND SHALL NOT BE REPRODUCED OR COPIED OR USED IN WHOLE OR IN PART AS THE BASIS FOR THE MANUFACTURE OR SALE OF ITEMS WITHOUT WRITTEN PERMISSION. COPYRIGHT © 1976 DIGITAL EQUIPMENT CORPORATION"

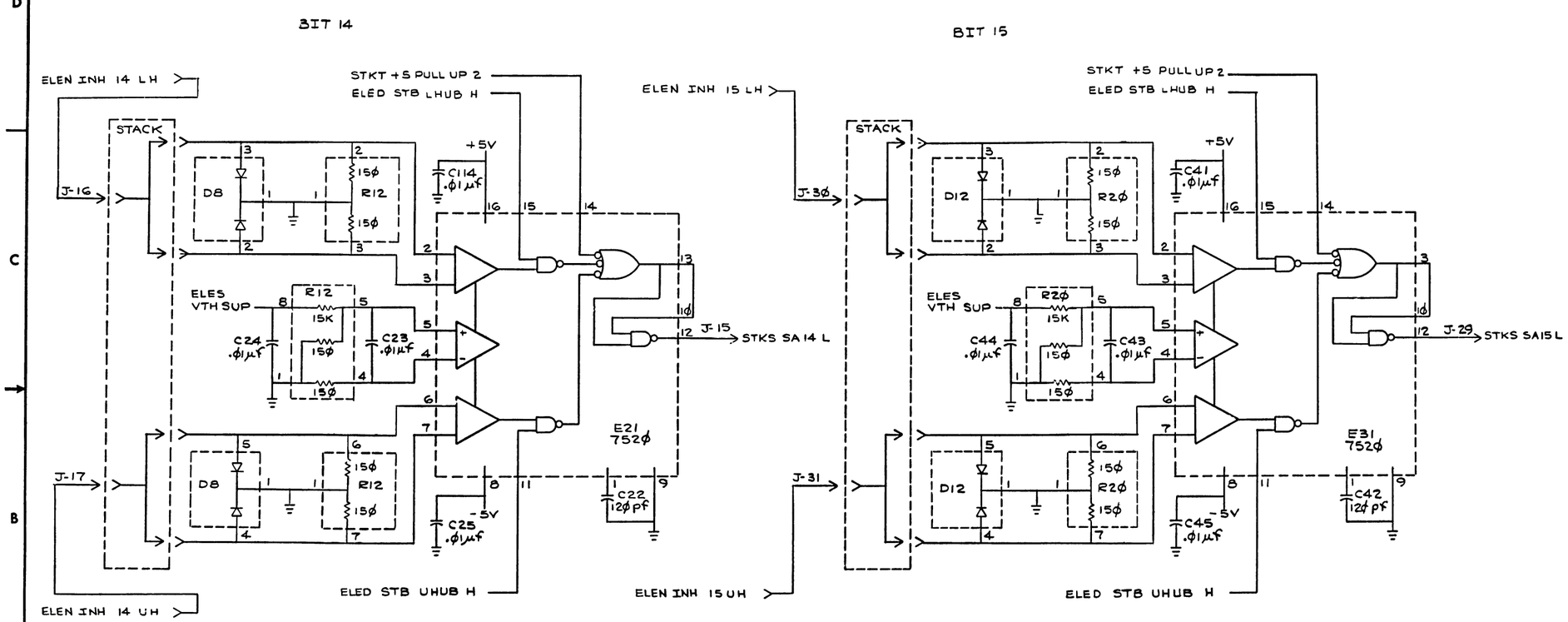

REVISIONS		
CHK	CHANGE NO	REV

TITLE	SIZE	CODE	NUMBER	REV.
SPC 32K (STKS) MEMORY	D	CS	5412149-Ø-1	D
SCALE — SHEET 15 OF 16	ST.			

DEC FORM NO. DRD 138

"THIS DRAWING AND SPECIFICATIONS, HEREIN, ARE THE PROPERTY OF DIGITAL EQUIPMENT CORPORATION AND SHALL NOT BE REPRODUCED OR COPIED OR USED IN WHOLE OR IN PART AS THE BASIS FOR THE MANUFACTURE OR SALE OF ITEMS WITHOUT WRITTEN PERMISSION. COPYRIGHT © 1970 DIGITAL EQUIPMENT CORPORATION"

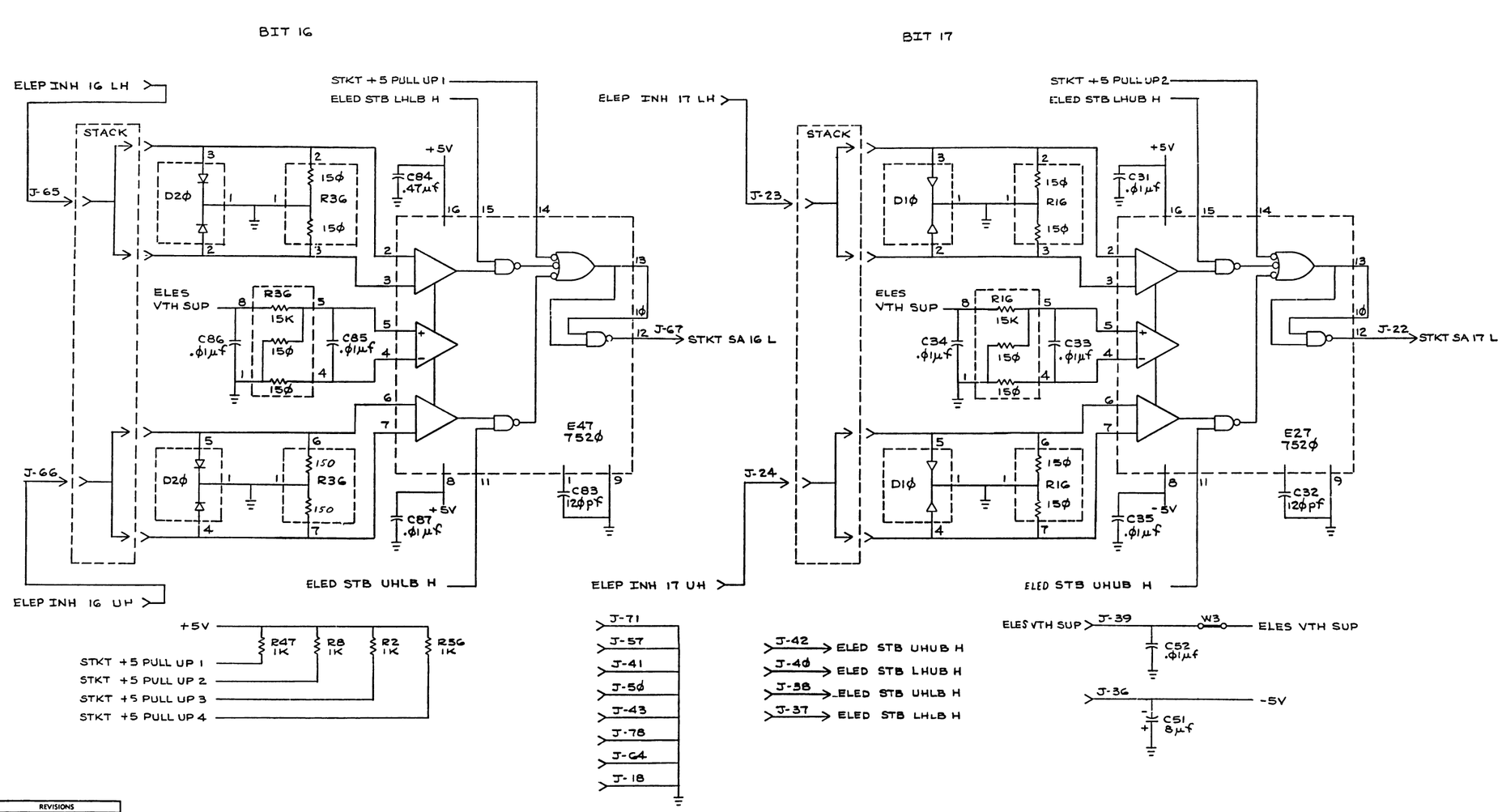

REVISIONS		
CHK	CHANGE NO	REV

TITLE	SIZE	CODE	NUMBER	REV.
SPC 32K (STKT) MEMORY	D	CS	5412149-Ø-1	D
SCALE —	SHEET 16 OF 16	DIST		

DEC FORM NO DRD 138

THIS DRAWING AND SPECIFICATIONS, HEREIN, ARE THE PROPERTY OF DIGITAL EQUIPMENT CORPORATION AND SHALL NOT BE REPRODUCED OR COPIED OR USED IN WHOLE OR IN PART AS A BASIS FOR THE MANUFACTURE OR SALE OF ITEMS NOT MADE BY OR FOR DIGITAL. COPYRIGHT © 1976 DIGITAL EQUIPMENT CORPORATION

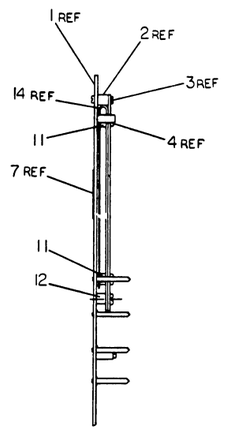

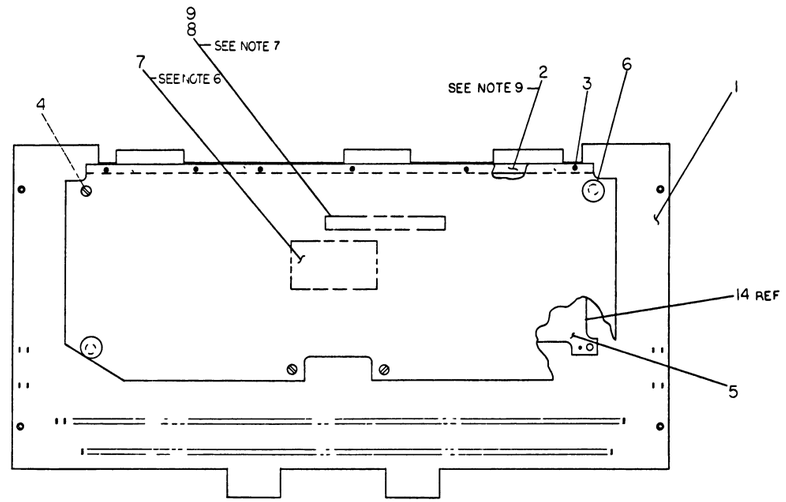

NOTES:

1. BOND CORE PLANE ASS'Y (ITEM NO. 5) TO THE STACK BD. (ITEM NO. 1) WITH ADHESIVE (ITEM NO. 10).
2. INSTALL THREADED CAMBION SPACERS (ITEM NOS. 11 AND 12) THRU STACK BOARD (ITEM NO. 1) AND CLINCH IN PLACE.
3. USE PROTECTIVE COATING (ITEM NO. 13) TO COAT ALL MAGNETIC WIRE TERMINATIONS AFTER ELECTRICAL TEST. REF DWG. E-IA-7013707-0-0
4. CLOSE COVER (PARTS OF ITEM NO. 5) AND SECURE STIFFENER SPACER (ITEM NO. 2) TO STACK BOARD (ITEM NO. 1) WITH FOUR # 2-56 SCREWS (ITEM NO. 3.)
5. SECURE COVER TO STIFFENER SPACER (ITEM NO. 2) WITH SIX # 2-56 SCREWS (ITEM NO. 3) AND TO CAMBION SPACERS (ITEM NO. 11 & 12) WITH 6 # 4-40 SCREWS (ITEM NO. 4)
6. APPLY NAME PLATE (ITEM NO. 7) TO SIDE 2 OF STACK BOARD (ITEM NO. 1) APPROXIMATELY WHERE SHOWN.
7. LABEL STACK BOARD (ITEM NO. 1) ON SIDE 2 WITH THE DEC PART NUMBER SEQUENTIAL SERIAL NUMBER, C S REVISION USING INK (ITEM NO. 9) AND EPOXY (ITEM NO. 8) EXAMPLE H228-B-001.
8. PLACE WARRANTY SEALS (ITEM NO. 6) OVER SCREW HEADS AS SHOWN.
9. STIFFENER SPACER (ITEM NO. 2) ORIENTATION MARK SHOULD BE PLACED ON THIS END. *

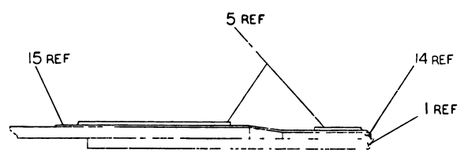

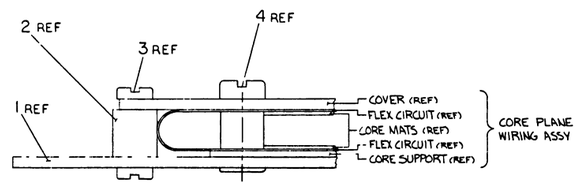

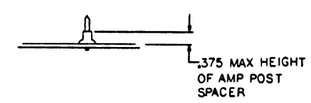

REF	DESCRIPTION	DWG./PART NO.	ITEM NO.
A/R	FLEX CIRCUIT ASSY (32K-SPC)	D-PS-1700091-0-0	15
REF	SUPPORT, CORE (32K-SPC)	D-MD-746245-0-0	14
A/R	PROTECTIVE COATING, RED (F145)	4901083	13
2	STANDOFF, .250 DIA X .250 LONG	9009677-01	12
4	STANDOFF, .250 DIA X .188 LONG	9009677-00	11
A/R	ADHESIVE (RTV 3145)	4901086-00	10
A/R	INK, BLACK	4901084-00	9
A/R	EPOXY	4901082-00	8
1	NAME PLATE	3614053-00	7
2	WARRANTY SEAL	3613970-00	6
1	CORE PLANE WIRING ASSY	E-IA-7013707-0-0	5
6	SCR, SLT BNDR HD, NYLON # 4-40	9005233-4	4
10	SCR, SLT BNDR HD, NYLON # 2-56	9000008-01	3
1	STIFFENER SPACER (32K-SPC)	D-PS-1214237-0-0	2
1	STACK BOARD (32K-SPC)	D-UA 5412149-0-0	1

H228-B-0

QUANTITY & VARIATION

UNLESS OTHERWISE SPECIFIED DIMENSIONS ARE IN INCHES

ANGLES ± 30' | SURFACE QUALITY ± | MICROINCHES

CLASS OF ACCURACY (CHECK ONE): MINIMUM ☐ PREFERRED ☐

NOMINAL DIMENSION RANGE INCHES: 0-6 | 6-12 | 12-24 | 24-48 | 48-96 | OVER 96

MINIMUM: ±.005 | ±.005 | ±.012 | ±.016 | ±.020 | ±.025

PREFERRED: ±.012 | ±.016 | ±.020 | ±.031 | ±.050 | ±0.1

THIRD ANGLE PROJECTION

REMOVE BURRS AND BREAK SHARP CORNERS

DO NOT SCALE DWG

MATERIAL: SEE PARTS LIST

FINISH

DRN. E. [illegible] 5 Mar 76
CHK'D [illegible] 25 APR 77
ENG [illegible] 25 APR 77
PROJ ENGR [illegible] 25 APR 77
PROD [illegible] 25 APR 77

NEXT HIGHER ASSY: B DD H228 B

SCALE 1/1

SHEET 1 OF 1

FIRST USED ON: MM11-YP

TITLE: H228-B CORE MEMORY STACK ASSEMBLY

SIZE B | CODE UA | NUMBER H228-B-0 | REV

DIST

REVISIONS: ZONE | CHANGE NO.

"THIS DRAWING AND SPECIFICATIONS HEREIN ARE THE PROPERTY OF DIGITAL EQUIPMENT CORPORATION AND SHALL NOT BE REPRODUCED OR COPIED OR USED IN WHOLE OR IN PART AS THE BASIS FOR THE MANUFACTURE OR SALE OF ITEMS WITHOUT WRITTEN PERMISSION
COPYRIGHT © 1975 DIGITAL EQUIPMENT CORPORATION"

NOTES:

1. ALL RESISTORS 1/4 W, 5% UNLESS OTHERWISE NOTED.
   ALL CAPACITORS ARE 100V, 20% UNLESS OTHERWISE NOTED.
2. JUMPER CONTROL OPERATIONS AS FOLLOWS:
   W1 THRU W4 SELECT CSR ADDRESS, W5 CAPACITOR FOR S SYN DLY, NOT USED.
3. E32 IS A SPARE LOCATION.

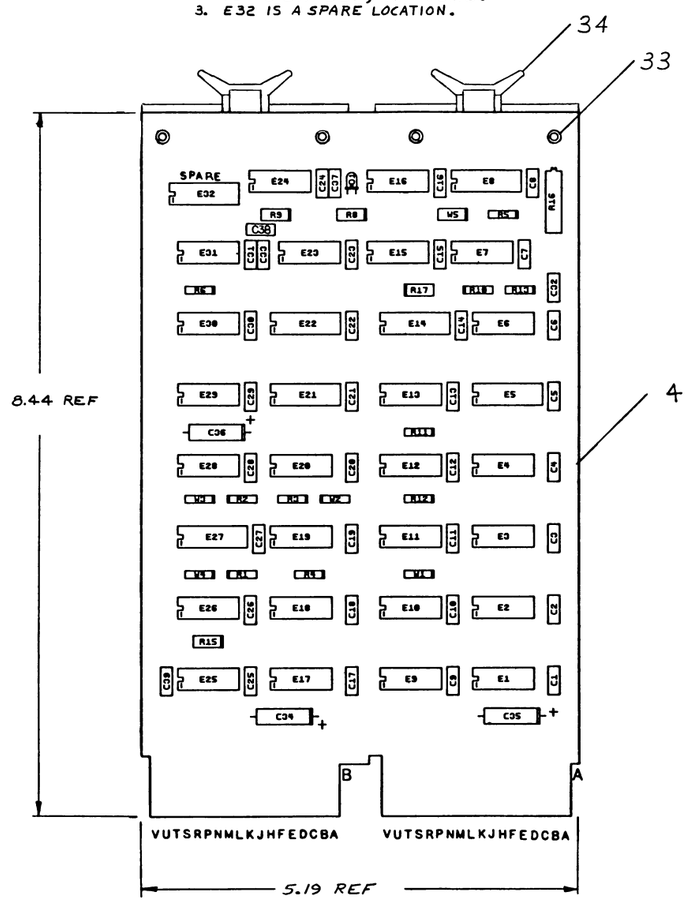

SPARES:

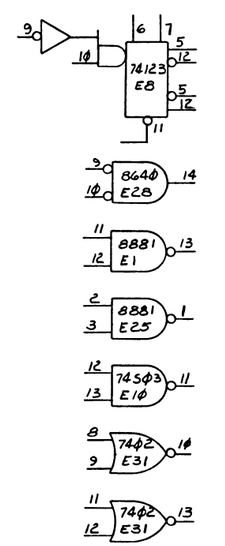

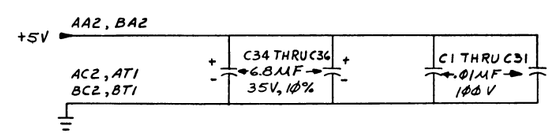

8640	1	8	
8266	8	16	
74157	8	16	
74174	8	16	
74123	8	16	
7485	8	16	
314A	1	8	
IC TYPE	GND	+5V	

GND AND 5V ARE USUALLY PIN 7 AND 14 RESPECTIVELY EXCEPTIONS ARE STATED ABOVE

IC PIN LOCATIONS

QTY	REF. DESIGNATION	DESCRIPTION	PART NO.	ITEM NO
REF		CIRCUIT SCHEMATIC	D-CS-M7850-0-1	REF
REF		X-Y COORDINATE HOLE LOCATION	K-CO-M7850-0-4	1
REF		ASSY/DRILLING HOLE LAYOUT	D-AH-M7850-0-5	2
REF		MODULE ECO HISTORY	B-MH-M7850-0-6	3
1		ETCHED CIRCUIT BOARD	5010651-00	4
1	C39	CAP 470 PF, 100V, 5% (DM)	1000024-00	5
2	C33, C37	CAP 330 PF, 100V, 5% (DM)	1000023-00	6
32	C1 THRU C32	CAP .01 µF, 100 V, 20% DISC	1001610-01	7
3	C34, C35, C36	CAP 6.8 µF, 35 V, 10% STANT	1005306-00	8
1	D1	DIODE, L.E.D.	1110324-00	9
5	R1 THRU R5	RES 4.7K 1/4W 5%	1300447-00	10
3	R8, R9, R15	RES 100 1/4W 5%	1300229-00	11
5	R6, R10, R11, R12, R17	RES 470 1/4W 5%	1300316-00	12
1	R13	RES 1K 1/4W 5%	1300365-00	13
1	R16	RES 10K 3/4W 20% (76 PR.RST)	1309143-10	14
1	E24	I.C. 7400	1905575-00	15
1	E30	I.C. 7430	1905578-00	16
1	E31	I.C. 7402	1909004-00	17
1	E19	I.C. 314A	1909704-00	18
1	E23	I.C. 7408	1910155-00	19
4	E1, E9, E17, E25	I.C. 8881	1909705-00	20
1	E16	I.C. 74H04	1909931-00	21
1	E27	I.C. 7485	1910224-00	22
1	E8	I.C. 74123	1910436-00	23
1	E10	I.C. 74503	1910533-00	24
1	E15	I.C. 74574	1910544-00	25
1	E21	I.C. 74174	1910652-00	26
2	E5, E22	I.C. 74157	1910655-00	27
9	E2, E3, E11, E12, E18 E20, E26, E28, E29	I.C. 8640	1911469-00	28
2	E4, E13	I.C. 745280	1911573-00	29
1	E14	I.C. 8266	1909934-00	30
2	E6, E7	I.C. 7474	1905547-00	31
4	W1 THRU W4	INSULATED JUMPER	9009185-00	32
4		EYELET	9006732-00	33
2		HANDLE, FLIP-CHIP (MAGENTA)	9008337-6	34

PARTS LIST

FIRST USED ON OPTION MODEL

ETCH BOARD REV B

DEC NO.	EIA NO.	DEC NO.	EIA NO

SEMICONDUCTOR CONVERSION CHART

REVISIONS			
REV.	B		
CHANGE NO.	M7850-00001		
CHK	J.B.		

J MANTON 1/13/75

DRN. W. LUFKIN DATE 2-5-75
CHK'D DATE 2/17/75
ENG. DATE 2/18/75
PROJ. ENG. DATE 2/18/75
PROD. DATE 2/25/75
NEXT HIGHER ASSY
SCALE
SHEET 1 OF 3

digital

TITLE PARITY MODULE

SIZE D CODE CS NUMBER M7850-0-1 REV. B
DIST.

DEC FORM NO DRD 120 B

"THIS DRAWING AND SPECIFICATIONS, HEREIN, ARE THE PROPERTY OF DIGITAL EQUIPMENT CORPORATION AND SHALL NOT BE REPRODUCED OR COPIED OR USED IN WHOLE OR IN PART AS THE BASIS FOR THE MANUFACTURE OR SALE OF ITEMS WITHOUT WRITTEN PERMISSION
COPYRIGHT © 1975 DIGITAL EQUIPMENT CORPORATION"

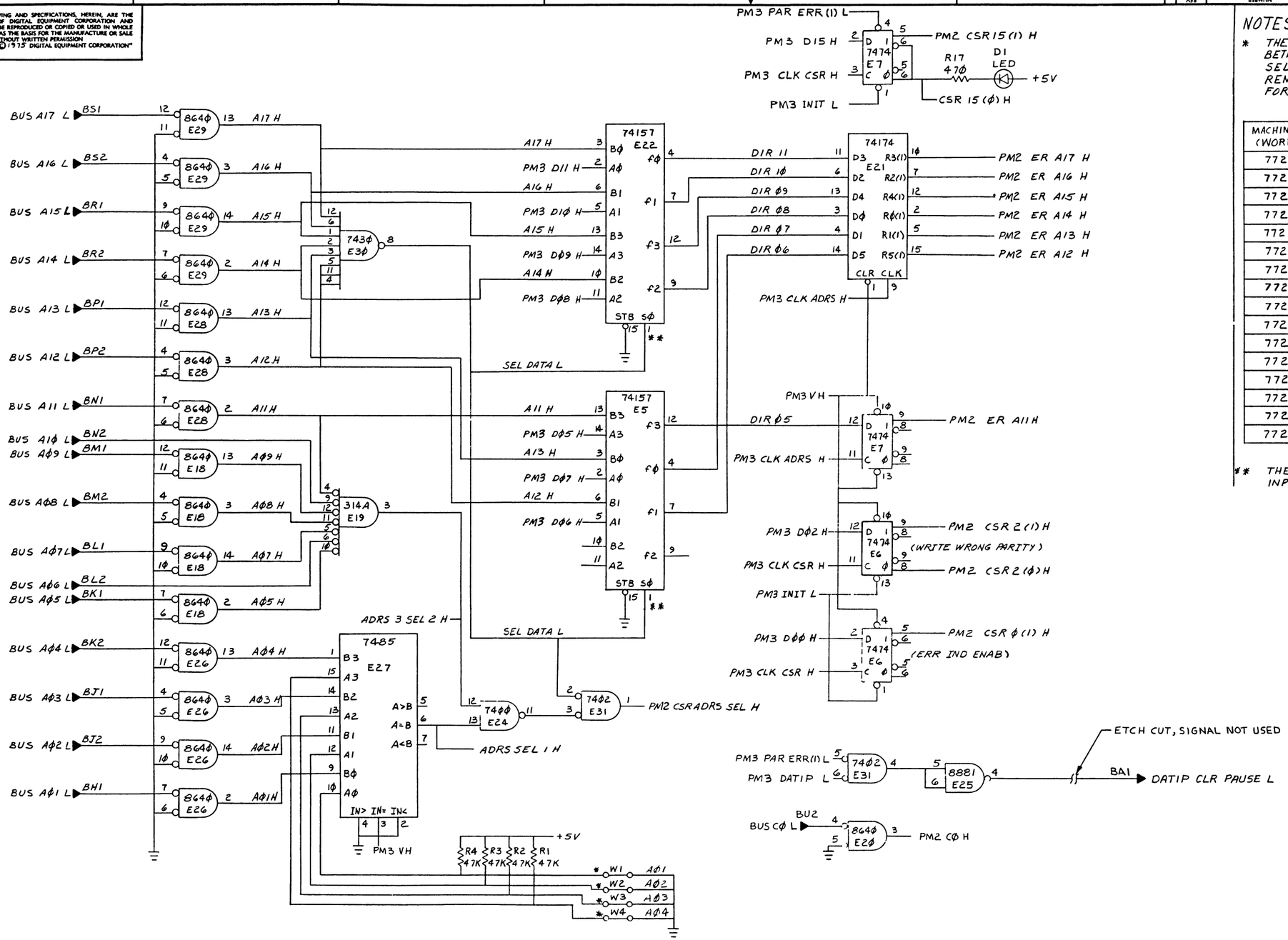

NOTES:

* THE CSR REGISTER ADDRESS IS LOCATED BETWEEN 772100 AND 772136. IT IS SELECTED WITH JUMPERS W1 THRU W4. REMOVING A JUMPER SELECTS A "ONE" FOR THAT BIT POSITION. (*)

MACHINE ADDRESS (WORDS) 8	W4 A4	W3 A3	W2 A2	W1 A1
772100	IN	IN	IN	IN
772102	IN	IN	IN	OUT
772104	IN	IN	OUT	IN
772106	IN	IN	OUT	OUT
772110	IN	OUT	IN	IN
772112	IN	OUT	IN	OUT
772114	IN	OUT	OUT	IN
772116	IN	OUT	OUT	OUT
772120	OUT	IN	IN	IN
772122	OUT	IN	IN	OUT
772124	OUT	IN	OUT	IN
772126	OUT	IN	OUT	OUT
772130	OUT	OUT	IN	IN
772132	OUT	OUT	IN	OUT
772134	OUT	OUT	OUT	IN
772136	OUT	OUT	OUT	OUT

** THE "A" INPUTS ARE SELECTED WHEN THE SEL INPUT GOES LOW. (**)

REVISIONS		
CHK	CHANGE NO	REV

TITLE: PARITY MODULE (PM2)
SIZE: D CODE: CS NUMBER: M7850-0-1 REV. B
SCALE: — SHEET 2 OF 3 DIST.

DEC FORM NO 0110 130

"THIS DRAWING AND SPECIFICATIONS, HEREIN, ARE THE PROPERTY OF DIGITAL EQUIPMENT CORPORATION AND SHALL NOT BE REPRODUCED OR COPIED OR USED IN WHOLE OR IN PART AS THE BASIS FOR THE MANUFACTURE OR SALE OF ITEMS WITHOUT WRITTEN PERMISSION
COPYRIGHT © 1975 DIGITAL EQUIPMENT CORPORATION"

NOTES:

* B INPUTS SELECTED WHEN SEL IS LOW (*)

** SET R16 TO 110 NSEC. ± 10 NS FROM SIGNAL ON PIN BE1 GOING LOW TO SIGNAL ON PIN BB2 GOING HIGH. (@ 1.5V LEVEL) (**)

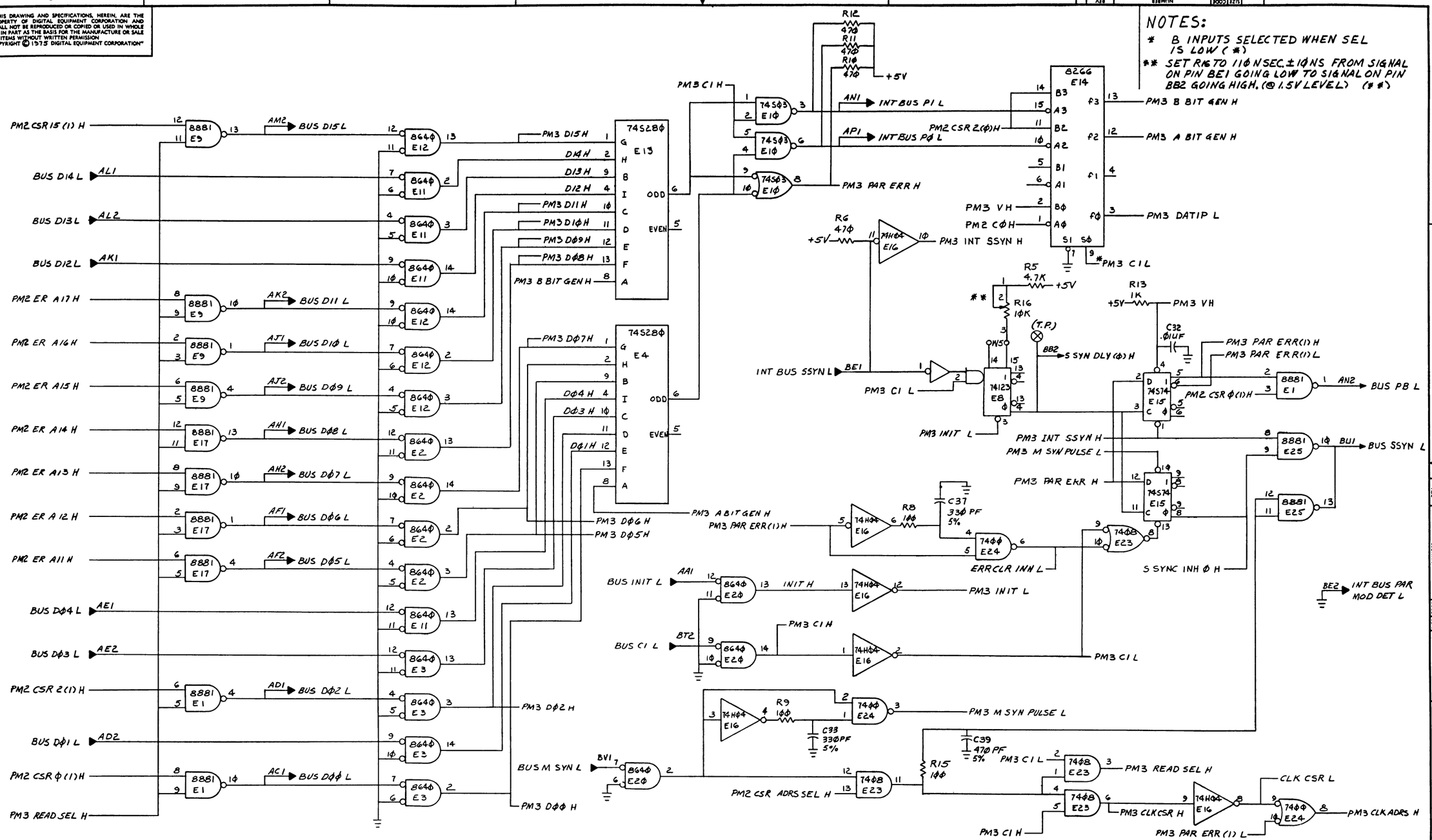

REVISIONS		
CHK	CHANGE NO	REV

TITLE	SIZE	CODE	NUMBER	REV.
PARITY MODULE (PM3)	D	CS	M7850-0-1	B
SCALE	SHEET 3 OF 3	DIST.		

DEC FORM NO DRD 130

DIGITAL EQUIPMENT CORPORATION
PARTS LIST

MADE BY David Caruso	CHECKED S. Bowman	SECTION 1
DATE 11/18/76	DATE 21 FEB 77	
ENG W. Coates	PROD R.A. Hill	ISSUED SECTION 1
DATE 29 APR 77	DATE 29 Apr 77	

NOTES:
USED ON: OPTION/MODEL H228B
NOTE:
1. * = CAP. 10-01610-01 CAN BE USED IN PLACE OF 10-01610-00

ITEM NO.	DRAWING NO.	PART NO.	DESCRIPTION	QUANTITY/VARIATION	REF DESIGNATION
	D-CS-5412149-Ø-1		CIRCUIT SCHEMATIC	REF	
	B-DD-5412149-Ø		DWG DIRECTORY	REF	
	D-MD-5012148-Ø-Ø		DRILL & ETCH DWG	REF	
	D-UA-5412149-Ø-Ø		UNIT ASSEMBLY	REF	
1		10-00042-00	CAP 1000 PF 100V 5% DM	2	C7,C113
2		10-00018-00	CAP 120 PF 100V 5% DM	18	C83,C93,C73,C63,C53,C46,C36,C26,C108,C99 C89,C79,C69,C59,C42,C32,C17,C22
3		5012148	ETCHED CIRCUIT BOARD	1	
4		10-10978-32	CAP .047 UF 50V CER	2	C6,C102
5	*	10-01610-00	CAP 0.01 UF 50V CER	67	C110,C111,C112,C114 C11,C95,C96,C97,C52,C85,C86,C87,C77,C75, C76,C103,C65,C66,C67,C106,C55,C56,C57, C50,C48,C49,C98,C100,C101,C82,C88,C90, C91,C92,C78,C80,C81,C68,C70,C71,C72,C58, C60,C61,C62,C41,C43,C44,C31,C33,C34,C35, C19,C20,C21,C25,C23,C24,C28,C29,C30 C38,C39,C40,C45,C98,C27
10		10-10279-0-0	CAP .47 UF 25V, 20% CER	14	C8,C9,C104,C105,C18,C27,C37,C47,C54,C64, C74,C94,C84,C109
11					
12		10-12084-01	CAP 8 UF 25V AL.EL.	3	C10,C51,C107
13					
14		11-05275-00	DIODE D672	8	D2,D3,D4,D5,D24,D25,D26,D27
15					
16		12-13551-00	CONTACT, PIN, STRAIGHT POST (AMP)	78	J1 thru J4, J12 thru J85
17					
18		13-01317-00	RES. 10 ¼W 5% CC	2	R5,R49

E.C.O. NO. V1L001

THIS DRAWING AND SPECIFICATIONS, HEREIN, ARE THE PROPERTY OF DIGITAL EQUIPMENT CORPORATION AND SHALL NOT BE REPRODUCED OR COPIED OR USED IN WHOLE OR IN PART AS THE BASIS FOR THE MANUFACTURE OR SALE OF ITEMS WITHOUT WRITTEN PERMISSION COPYRIGHT © 1976 . DIGITAL EQUIPMENT CORPORATION"

TITLE	ASSY NO.	SIZE	CODE	NUMBER	REV.
32K SPC MEMORY	D-UA-5412149-0-0	B	PL	5412149-0-0	D
	SHEET 1 OF 2				

DIGITAL EQUIPMENT CORPORATION
PARTS LIST

MADE BY David Caruso	CHECKED G. Boorman	SECTION 1
DATE 11/18/76	DATE 21 FEB 77	
ENG W. Coates	PROD [illegible]	ISSUED SECTION 1
DATE 29 APR 77	DATE 29 Apr 77	

NOTES: USED ON: OPTION/MODEL H228B

ITEM NO.	DRAWING NO.	PART NO.	DESCRIPTION	QUANTITY/VARIATION	REF DESIGNATION
19		13-00202-00	RES. 47 ¼W 5% CC	2	R3,R44
20		13-00365-00	RES 1K ¼W 5% CC	4	R2,R8,R47,R114
21		13-13217-00	RES NETWORK (6-150Ω 1%,1-15K 1%)	18	R46,R10,R12,R16,R20,R26,R30,R34,R38, R42,R14,R18,R22,R24,R28,R32,R36,R40
22					
23					
24		13-13837-00	RES. NETWORK (8-110Ω 5%)	4	R50,R51,R52,R53
25		13-00229-00	RES. 100 ¼W 5% CC	2	R4,R45
26		15-13265-00	TRANSISTOR Q3725 QUAD	2	E71,E72
27					
28		16-10662-00	INDUCTOR,100 UH, 10%	2	L1,L2
29					
30		19-10010-00	DIODE ARRAY DEC 2501-00	48	E6,E53,E54,E56,E57,E58,E59,E60,E12,E13, E14 thru E19,E9,E10,E33,E34,E22,E3,E23, E49,E64,E50,E69,E38,E70,E39,E8,E29,E7, E30,E25,E26,E65,E45,E66,E46,E67,E42,E68, E5,E43,E4,E63,E55
31					
32					
33					
34					
35		19-11748-00	I.C. DEC 7520	18	E51,E47,E41,E37,E35,E32,E36,E24,E61,E52, E48,E44,E31,E28,E27,E20,E21,E40
36					
37		19-12068-00	I.C. 74128	2	E2,E62

E.C.O. NO.

"THIS DRAWING AND SPECIFICATIONS, HEREIN, ARE THE PROPERTY OF DIGITAL EQUIPMENT CORPORATION AND SHALL NOT BE REPRODUCED OR COPIED OR USED IN WHOLE OR IN PART AS THE BASIS FOR THE MANUFACTURE OR SALE OF ITEMS WITHOUT WRITTEN PERMISSION COPYRIGHT © 1976 , DIGITAL EQUIPMENT CORPORATION"

TITLE	ASSY NO.	SIZE	CODE	NUMBER	REV.
32K SPC MEMORY	D-UA-5412149-0-0	B	PL	5412149-0-0	D
	SHEET 2 OF 3	INSERTION PARTS LIST DATA BASE REV			

EN-01140A-16-R276(325) DRB 125

DIGITAL EQUIPMENT CORPORATION
PARTS LIST

MADE BY Dave Caruso	CHECKED G. Bowman	SECTION 1
DATE 11/18/76	DATE 21 FEB 77	
ENG W. Coates	PROD R.A. Hill	ISSUED SECTION 1
DATE 29 APR 77	DATE 29 Apr 77	

NOTES:
USED ON OPTION/MODEL H228 B

ITEM NO.	DRAWING NO.	PART NO.	DESCRIPTION	QUANTITY/VARIATION	REF DESIGNATION
38	D-AD-70-10918-0-0	70 10918-0-0	DIODE PACK COMMON CATHODE (4-D672)	18	D7 THRU D23, D28
39		90-09185-00	JUMPER, WIRE, INSULATED	3	W1, W2, W3
40		91-07771-00	DIODE ASSEMBLY SPACER	36	
41		91-07784-00	TUBING, SHRINK. (AMP POST SPACER)	11	
42		90-09858-00	STANDOFF, SPECIAL (.426)	3	
43		90-09858-01	STANDOFF, SPECIAL (.376)	2	
44		90-08456-01	TAPE, ADHESIVE FOAM	A/R	

E.C.O. NO.

THIS DRAWING AND SPECIFICATIONS, HEREIN, ARE THE PROPERTY OF DIGITAL EQUIPMENT CORPORATION AND SHALL NOT BE REPRODUCED OR COPIED OR USED IN WHOLE OR IN PART AS THE BASIS FOR THE MANUFACTURE OR SALE OF ITEMS WITHOUT WRITTEN PERMISSION COPYRIGHT © 1977 , DIGITAL EQUIPMENT CORPORATION"

TITLE	ASSY NO.	SIZE	CODE	NUMBER	REV.
32K SPC MEMORY	D-UA-5412149-0-0	B	PL	5412149-0-0	D
	SHEET 3 OF 3	INSERTION PARTS LIST DATA BASE REV			

LINE	ITEM	DOCUMENT NO.	PART NO.	DESCRIPTION	QTY	REFERENCE DESIGNATORS
1	1	D-CS-G657-0-1		CIRCUIT SCHEMATIC	REF	
2	2	B-MH-G657-0-6		MODULE ECO HISTORY	REF	
3	3	D-UA-G657-0-0		UNIT ASSEMBLY	REF	
4	4		5012147-00	G657	1	
5	5		1005820-00	22.0 MMF 100V 5%200PPM DM15S (10-00	1	C26
6	6		1000011-00	47.0 MMF 100V 5%200PPM DM15S (10-00	1	C8
7	7		1000015-00	82.0 MMF 100V 5%200PPM DM15S (10-00	3	C1-C3
8	8		1000023-00	330.0 MMF 100V 5%200PPM DM15S (10-00	18	C30,C34,C38,C42,C46,C50,C54,
					CONT	C58,C62,C66,C70,C74,C82,C86,
					CONT	C90,C94,C98,C78
9	9		1011683-00	.022 MFD 50V 10% 2C067 CER.	4	C5,C12,C17,C22
10	10		1010274-00	.22 MFD 50V X% 7C023 CER.	28	C16,C28,C136,C102-C124,C137,
					CONT	C193
11	11		1010279-00	.47 MFD 25V 20% 2C023 CER.	22	C6,C13,C18,C23,C31,C35,C39,
					CONT	C43,C47,C51,C55,C59,C63,C67,
					CONT	C71,C75,C79,C83,C87,C91,C95,
					CONT	C99
12	12		1012084-01	8 MFD 25V G% 30D AL EL (10-12	4	C11,C19,C20,C133
13	13		1012219-00	47. MFD 30V G% 600D AL EL	3	C195-C197
14	14		1000076-00	39 MFD 10V 10% 150D S.TA (10-00	1	C14
15	15		1105648-00	1N 4744 VZ= 15.0 10% 1W Y	4	D117,D119,D121,D123
16	16		1105275-00	D 672 TR= 15NS PIV= 60V SP	112	D1-D53,D55-D57,D59-D114
17	17		1110994-00	1N 751A VZ= 5.1 5% .40W P	2	D124,D125
18	18		1102421-00	1N 753A VZ= 6.2 5% .40W P	1	D115
19	19		1100125-00	1N 758A VZ= 10.0 5% .40W PPER S.A.V.E(	1	D116
20	20		1212104-00	CONN .100 7POS RT ANGLE	1	J89
21	21		1211728-00	SOCKET 1POS STRIP FORM 8	78	J1-J4,J12-J85
22	22		1205747-00	FUSE, SUR-MINI, 5. 0A, 125V, AXIAL LEAD	1	F1
23	23		1211164-01	SW,DIP 1P 1A SPDS	1	S1
24	24		1210929-03	FUSE, SUR-MINI .750A, 125V, AXIAL LEAD	19	F2-F20

REVISION HISTORY			VARIATIONS FOR THIS ASSY.	FIRST USED ON: MM11-XP		DIGITAL EQUIPMENT CORPORATION MAYNARD, MASSACHUSETTS		
CHK	ECO NO	REV	00					
F.R	00001	C		MADE BY: D CARUSO	DATE: 09-MAR-78	TITLE PARTS LIST 32K SPC ELECTRONICS		
				CHECKED: R MANION	DATE: 09-MAR-78			
				DSN.ENG.: W COATES	DATE: 09-MAR-78	SIZE K	CODE PL	DOCUMENT NUMBER G657-0-DBP / REV C
				PROD.: R HILL	DATE: 09-MAR-78			
				RESP.ENG.: W COATES	DATE: 09-MAR-78	ASSY.NO.: B-PL-G657-0-0		EDIT# 7

"THIS DRAWING AND SPECIFICATIONS HEREIN, ARE THE PROPERTY OF DIGITAL EQUIPMENT CORPORATION AND SHALL NOT BE REPRODUCED OR COPIED OR USED IN WHOLE OR IN PA AS THE BASIS FOR THE MANUFACTURE OR SALE OF ITEMS WITHOUT WRITTEN PERMISSION. COPYRIGHT 1978, DIGITAL EQUIPMENT CORPORATION "

LINE	ITEM	DOCUMENT NO.	PART NO.	DESCRIPTION	QTY	REFERENCE DESIGNATORS
25	25		1305114-00	3.48 K 1/4W 1% RN55D-F 100PPM (13-00	1	R63
26	26		1302091-00	330 K 1/4W 5% CC (13-00	1	R154
27	27		1312466-06	75 1W 1% WW (13-00	1	R155
28	28		1312466-04	.5 1W 1% (13-00	1	R29
29	29		1301317-00	10 1/4W 5% CC (13-00	1	R37
30	30		1312466-00	10 1W 1% WW (13-00	4	R21,R32,R43,R51
31	31		1301425-00	300 1/4W 5% CC (13-00	18	R74,R78,R82,R86,R90,R94,R98,
					CONT	R102,R106,R110,R114,R118,R122,
					CONT	R126,R130,R134,R139,R144
32	32		1301969-00	22 1/4W 5% CC (13-00	59	R13,R30,R40,R48,R73,R75-R77,
					CONT	R79-R81,R83-R85,R87-R89,
					CONT	P91-R93,R95-R97,R99-R101,
					CONT	R103-R105,R107-R109,R111-R113,
					CONT	R115-R117,R119-R121,R123-R125,
					CONT	R127-R129,R131-R133,R135,R136,
					CONT	R138,R140,R141,R143,R145,R153,
					CONT	R44
33	33		1302602-00	56 1/4W 5% CC (13-00	3	R1,R5,R20
34	34		1300229-00	100 1/4W 5% CC (13-00	4	R4,R8,R9,R11
35	35		1304856-00	4.64 K 1/4W 1% RN55D-F 100PPM (13-00	1	R150
36	36		1300250-00	150 1/4W 5% CC (13-00	2	R41,R52
37	37		1305124-00	287 1/4W 1% RN55D-F 100PPM (13-00	1	R19
38	38		1300274-00	220 1/2W 5% CC (13-00	2	R146,R148
39	39		1312123-00	220 3W 1% WW (13-00	2	R56,R151
40	40		1301972-00	270 1/4W 5% CC (13-00	2	R12,R10
41	41		1303067-00	422 1/4W 1% RN55D-F 100PPM (13-00	1	R18
42	42		1300365-00	1 K 1/4W 5% CC (13-00	8	R3,R7,R35,R38,R72,R137,R142,
					CONT	R152
43	43		1303045-00	3.16 K 1/4W 1% RN55D-F 100PPM (13-00	2	R53,R14
44	44		1304855-00	9.09 K 1/4W 1% RN55D-F 100PPM (13-00	1	R57
45	45		1300447-00	4.7 K 1/4W 5% CC (13-00	1	R36
46	46		1305324-00	4.99 K 1/4W 1% RN55D-F 100PPM (13-00	1	R54
47	47		1303312-00	10.0 K 1/4W 1% RN55D-F 100PPM (13-00	2	R17,R26
48	48		1300479-00	10 K 1/4W 5% CC (13-00	8	R55,R59,R60,R64-R68
49	49		1302941-00	14.7 K 1/4W 1% RN55D-F 100PPM (13-00	2	R69,R70
50	50		1309419-00	19.6 K 1/4W 1% RN55D-F 100PPM (13-00	1	R58
51	51		1303156-00	34.8 K 1/4W 1% RN55D-F 100PPM (13-00	1	R61
52	52		1305252-00	68.1 K 1/4W 1% RN55D-F 100PPM (13-00	2	R25,R62
53	53		1303219-00	82 K 1/4W 5% CC (13-00	1	R71
54	54		1305255-00	121 K 1/4W 1% RN55D-F 100PPM (13-00	1	R23
55	55		1309595-00	1 M 1/4W 5% CC (13-00	2	R27,R28
56	56		1304843-00	243 K 1/4W 1% RN55D-F 100PPM (13-00	1	R22
57	57		1309785-00	300 2% THERMISTOR	1	R15
58	58		1300202-00	47 1/4W 5% CC (13-00	2	R2,R6
59	59		1503409-01	DEC6534B PNP 310MW SI 40 90 P	1	Q8
60	60		1509605-00	2N 4920 PNP 30WC SI 80 20 S	1	Q9
61	61		1505321-00	DEC4258 PNP 200MW SI 12 30 M	1	Q10
62	62		1510959-00	2N 3725 NPN 3.5WC SI 50 60 P	4	Q4-Q7

DIGITAL EQUIPMENT CORPORATION MAYNARD, MASSACHUSETTS	TITLE PARTS LIST 32K SPC ELECTRONICS	SIZE K	CODE PL	DOCUMENT NUMBER G657-0-DBP	REV C

LINE	ITEM	DOCUMENT NO.	PART NO.	DESCRIPTION	QTY	REFERENCE DESIGNATORS
63	63		1513265-00	3725 QUAD CORE DRIVER	9	E32,E50,E71,E76,E93,E97,E54,
					CONT	E114,E118
64	64		1503100-00	DEC3009B NPN 200MW SI 20 25 P	3	Q1-Q3
65	65		1610962-00	XFMR,SATURATING(Y,7)	2	E39,E103
66	66		1609996-00	PULSE XFMR BH001-0107 DEC5 22	10	E31,E49,E53,E70,E72,E75,E92,
					CONT	E96,E113,E117
67	67		1611243-00	DELAY=25-250NS,10TAPS RCL8L-183 E PE#9829	3	E5,E11,E18
68	68		1610662-00	100.0 UH 10% 165MA 8DD1 00	3	L7-L9
69	69		1610963-00	400 UH 900MA,.30HMS	6	L1-L6
70	70		1613820-00	XFMR,SATURATING(INHIBIT)	9	E38,E43,E61,E66,E81,E86,E102,
					CONT	E108,E126
71	71		1910878-00	7427 NOR GATE-TRIPLE 3IN	1	E25
72	72		1905578-00	7430 NAND GATE-SINGLE 8INPUT	2	E21,E22
73	73		1910541-00	74S40 NAND GATE-DUAL 4IN,BUFFER 16	1	E112
74	74		1910046-00	7442 DECODER-1 OF 10,BCD SELECTED	7	E6,E44,E55,E87,E98,E109,E127
75	75		1909050-00	7475 LATCH 4BIT	5	E2,E8,E58,E63,E123
76	76		1910230-00	74121 ONE SHOT	1	E78
77	77		1912068-00	74128 DRIVER,LINE,QUAD,50/75 OHM	13	E3,E4,E9,E37,E42,E60,E65,E80,
					CONT	E82,E85,E101,E107,E125
78	78		1909932-01	7483A ADDER-4BIT W/LOOK AHD CARRY	1	E15
79	79		1909058-00	74H21 AND GATE-DUAL 4INPUT	2	E84,E91
80	80		1909060-00	DEC 74H50 A-O-I XPNDBLE GATE-DUAL 2X2	1	E24
81	81		1910532-00	74S00 NAND GATE-QUAD 2IN8	5	E17,E23,E28,E100,E122
82	82		1912389-00	74S08 AND GATE-QUAD 2IN,POS 14	1	E16
83	83		1910534-00	74S04 INVERTER GATE-HEX 1IN	3	E10,E14,E29
84	84		1910544-00	74S74 FF-D DUAL,EDGE TRIGGER	10	E27,E38,E41,E52,E67,E74,E89,
					CONT	E95,E106,E116
85	85		1911469-00	DEC 8640 RECEIVER,BUS,QUAD,UNIBUS,O-BU	5	E36,E46,E48,E69,E111
86	86		1911579-00	8641 TRANSCEIVER,BUS,QUAD,UNIBUS	7	E1,E7,E13,E20,E34,E57,E62
87	87		1910298-00	741 OP AMP GEN PURP, COMPENSATED D	1	E119
88	88		1910960-00	DEC 75325 DRIVER,CORE MEMORY,DUAL	28	E12,E19,E26,E33,E35,E40,E45,
					CONT	E47,E51,E56,E59,E64,E68,E73,
					CONT	E77,E79,E83,E88,E90,E94,E99,
					CONT	E104,E105,E110,E115,E120,E121,
					CONT	E124
89	89		7010918-05	DIODE PKG COMMON CATHODTE	36	D126,D127-D161
90	90		7415338-00	LEFT HANDLE ASSY	1	
91	91		7415337-00	RIGHT HANDLE ASSY	1	
92	92		1214237-00	BAR,STIFFENER W/10 INSERTS 8	1	
93	93		1213567-00	HANDLE,MODULE(SEGMENT)	2	
94	94		9006557-00	NUT,KEP , 4-40X 1/4 AF C6	1	
95	95		9006010-01	SCREW,PAN ,PHIL, 4-40X 5/16 SS/PAS	1	
96	96		9000008-01	SCREW, NYLON, SLID PAN HD, 2-56 X .187	9	
97	97		9006735-00	EYELET, FUNNEL FLANGE, .059 OD X .187 LG	77	
98	98		9000024-01	EYELET, ROLLED FLANGE, .121 OD X .196 LG	10	
99	99		9009185-00	JUMPER, WIRE, INSULATED, BLACK BAND	17	W1-W17
100	100		9007201-00	TRANSIPADS #10253	4	
101	101		9107771-00	TUBING,STRD WALL,.040ID UL8	72	

LINE	ITEM	DOCUMENT NO.	PART NO.	DESCRIPTION	QTY	REFERENCE DESIGNATORS
102	102		1305128-00	5.62 K 1/4W 1% RN55D-F 100PPM (13-08	1	R33
103	103		1300249-00	150 1/2W 5% CC (13-00	2	R147,R149
104	104		1300247-00	120 1/4W 5% CC (13-00	1	R39
105	105		1303178-00	620 1/4W 5% CC (13-00	1	R46
106	106		1110836-00	1N 759A VZ= 12.0 5% .40W P	1	D120
107	107	SEE NOTE 109	1001610-00	.01 MFD 50V Z5U 309CER/8000PF MIN	110	C4,C7,C9,C10,C15,C21,C24,C25,
					CONT	C27,C29,C32,C33,C36,C37,C40,
					CONT	C41,C44,C45,C48,C49,C56,C57,
					CONT	C60,C61,C64,C65,C68,C69,C72,
					CONT	C73,C76,C77,C80,C81,C84,C85,
					CONT	C88,C89,C92,C93,C96,C97,C100,
					CONT	C52,C53,C126,C128,C130-C132,
					CONT	C134,C135,C138-C166,C168-C192,
					CONT	C194,C210,C127,C129
108	108		9105740-55	WIRE(WRAP)30AWG UL1423 (91-00	A/R	

109 NOTE: 10-01610-01 CAN BE USED IN PLACE OF 10-01610-00

DIGITAL EQUIPMENT CORPORATION MAYNARD, MASSACHUSETTS	TITLE PARTS LIST 32K SPC ELECTRONICS	SIZE K	CODE PL	DOCUMENT NUMBER G657-0-DBP	REV C

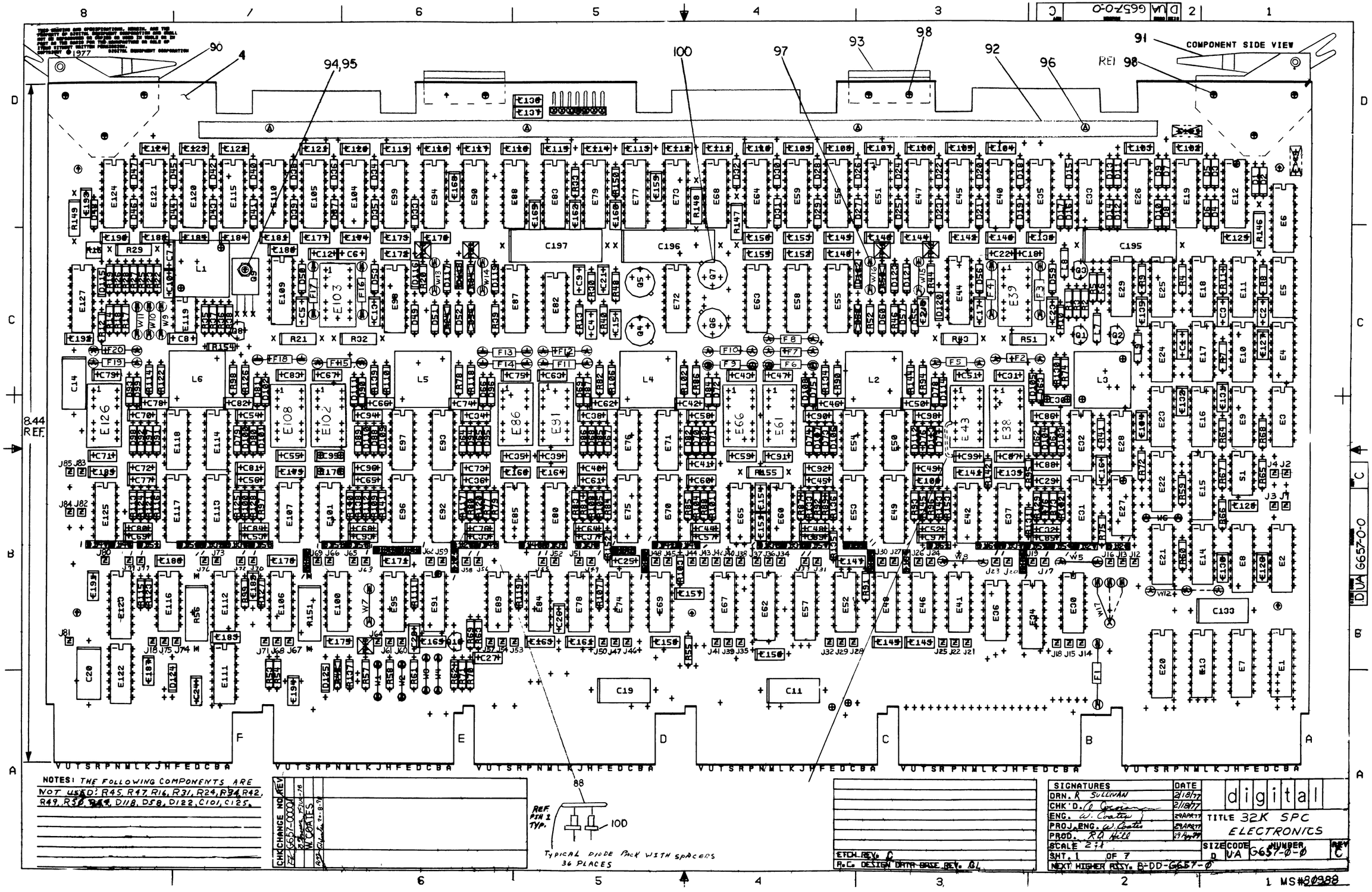
COMPONENT SIDE VIEW
REF
8.44 REF.
C197
C196
C195
C133
C19
C11
C20
L1
L2
L3
L4
L5
L6
R29
R21
R32
R43
R51
R155
R151
R146
R147
R148
R149
Q9
Q5
Q6
Q7
Q4
Q1
Q2
Q3
F1
REF PIN 1 TYP.
TYPICAL DIODE PACK WITH SPACERS 36 PLACES
NOTES: THE FOLLOWING COMPONENTS ARE NOT USED: R45, R47, R16, R31, R24, R34, R42, R49, R50, R44, D118, D58, D122, C101, C125.
CHK CHANGE NO. REV
G657-0001
W. COATES
SIGNATURES
DATE
DRN. R. SULLIVAN 2/18/77
CHK'D. 2/18/77
ENG. W. Coates 29APR77
PROJ. ENG. W. Coates 29APR77
PROD. R.D. Hill 29APR77
digital
TITLE 32K SPC ELECTRONICS
SCALE 2:1
SHT. 1 OF 7
SIZE D
CODE UA
NUMBER G657-0-0
REV C
NEXT HIGHER ASSY. B-DD-G657-0
ECH. REV. C
P.C. DESIGN DATA BASE REV. B1
MS#80988
DUA G657-0-0

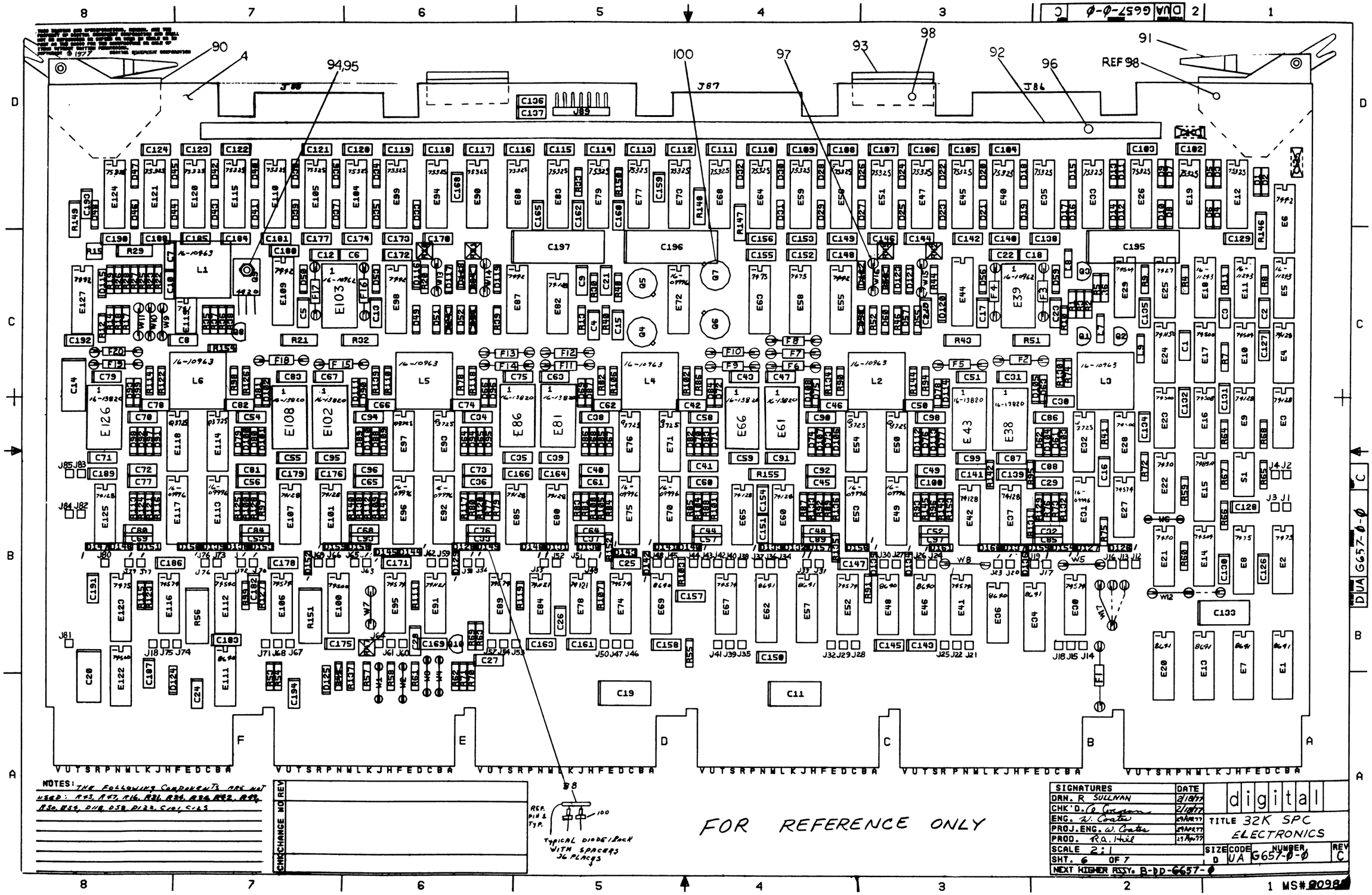
DUA G657-0-0
J86
J87
J88
J89
L1
L2
L3
L4
L5
L6
C197
C196
C195
C133
C19
C11
REF 98
FOR REFERENCE ONLY
Typical diode/pack with spacers 36 places
Ref. pin 1 typ.
NOTES: THE FOLLOWING COMPONENTS ARE NOT USED: R43, R47, R116, R121, R124, R134, R142, R149, R150, R159, D118, D58, D122, C101, C123
CHK CHANGE NO REV
SIGNATURES
DATE
DRN. R SULLIVAN 2/18/77
CHK'D. 2/18/77
ENG. W. Coates 29APR77
PROJ. ENG. W. Coates 29APR77
PROD. R.A. Hill 29APR77
SCALE 2:1
SHT. 6 OF 7
NEXT HIGHER ASSY. B-DD-G657-0
digital
TITLE 32K SPC ELECTRONICS
SIZE D
CODE UA
NUMBER G657-0-0
REV C
MS# 2098

THIS DRAWING AND SPECIFICATIONS, HEREIN, ARE THE PROPERTY OF DIGITAL EQUIPMENT CORPORATION AND SHALL NOT BE REPRODUCED OR COPIED OR USED IN WHOLE OR IN PART AS THE BASIS FOR THE MANUFACTURE OR SALE OF ITEMS WITHOUT WRITTEN PERMISSION.
COPYRIGHT © 1976 DIGITAL EQUIPMENT CORPORATION

COMPONENT SIDE VIEW

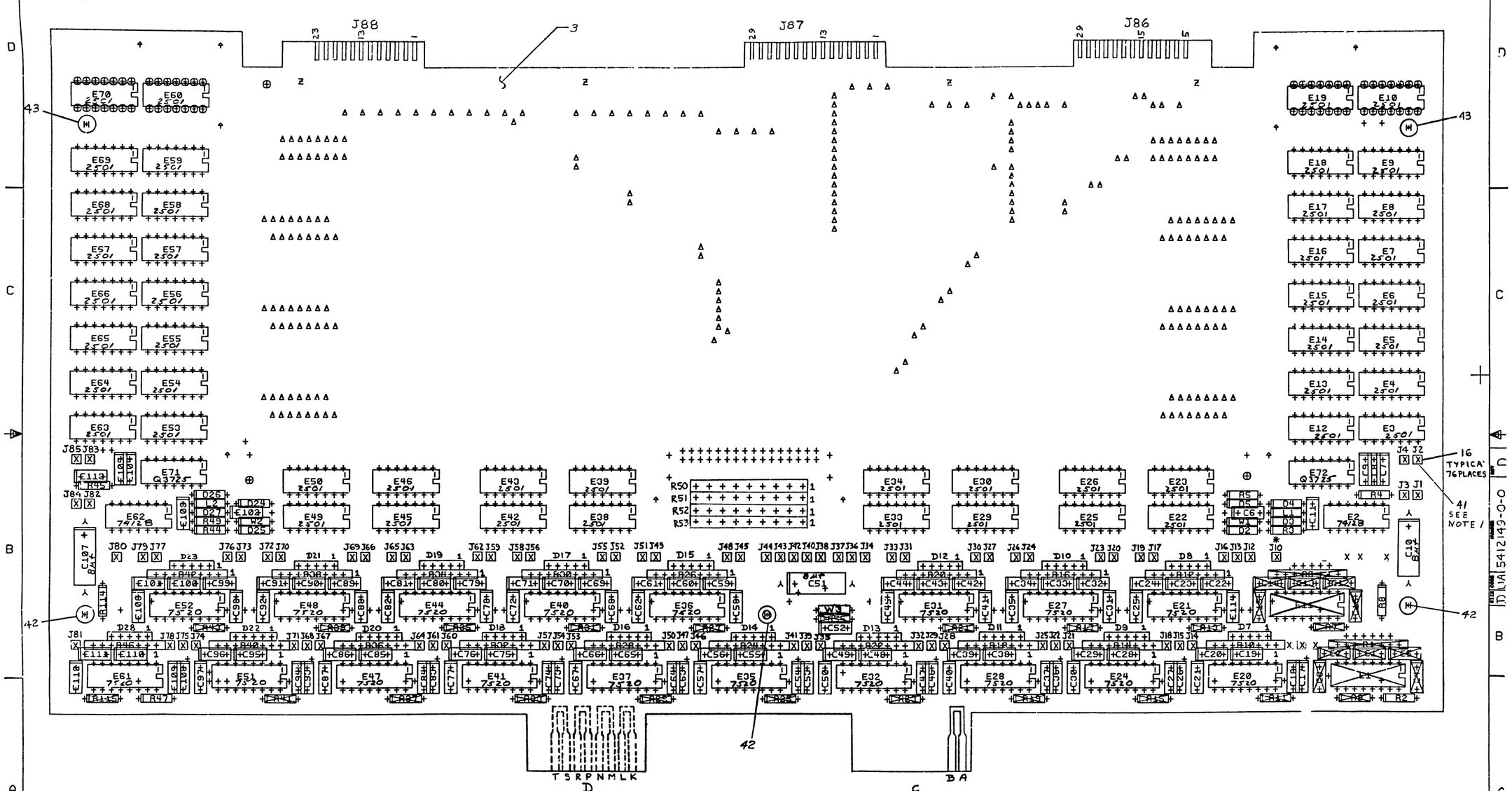

NOTES:

1. PINS THAT HAVE AMP POST SPACERS ARE (11 PLACES) J2, 14, 21, 28, 35, 50, 57, 69, 71, 78, 85. AMP POST SPACERS MUST BE PUT ON BEFORE ELECTRONIC COMPONENTS ARE INSTALLED.

CHK	CHANGE NO	REV
CK	5412149-MLI	D
	W. COATES	

SIGNATURES	DATE
DRN. K. Sharpino	12-8-76
CHK'D. K. Sharpino	12-10-76
ENG. W. Coates	2-14-77
PROJ. ENG. W. Coates	2-14-77
PROD. K. S. [illegible]	[illegible]
SCALE 2/1	
SHT. 1 OF 4	
NEXT HIGHER ASSY. B-DD-5412149-0	

ETCH REV. D

P.C. DESIGN DATA BASE REV. DL

digital

TITLE 32 K SPC MEMORY

SIZE	CODE	NUMBER	REV
D	UA	5412149-0-0	D

MS# 80989

THIS DRAWING AND SPECIFICATIONS, HEREIN, ARE THE PROPERTY OF DIGITAL EQUIPMENT CORPORATION AND SHALL NOT BE REPRODUCED OR COPIED OR USED IN WHOLE OR IN PART AS THE BASIS FOR THE MANUFACTURE OR SALE OF ITEMS WITHOUT WRITTEN PERMISSION.
COPYRIGHT © 1976 DIGITAL EQUIPMENT CORPORATION

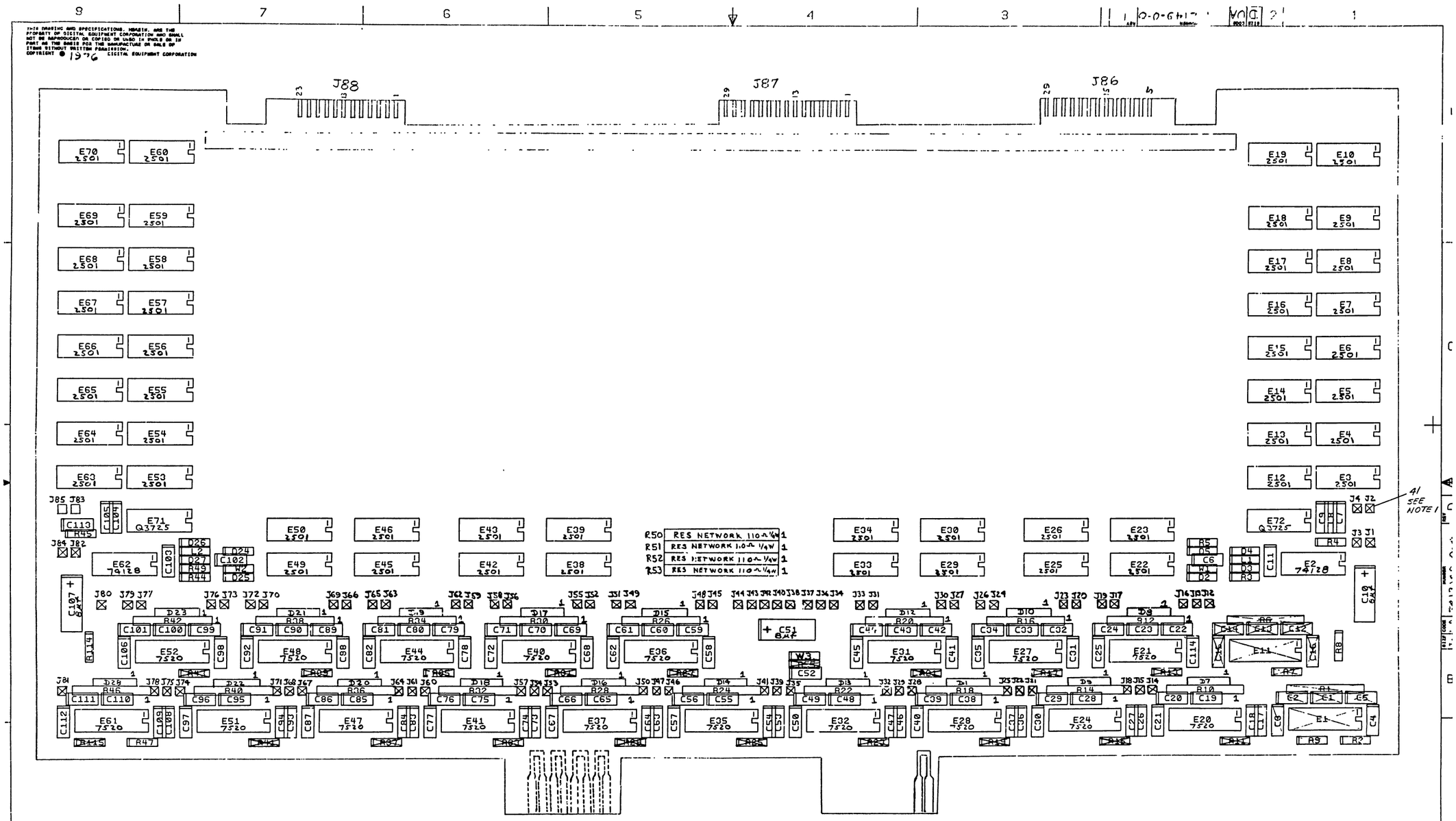

NOTES:

1. PINS THAT HAVE AMP POST SPACERS ARE (11 PLACES) J2, 14, 21, 28, 35, 50, 57, 64, 71, 78, 85. AMP POST SPACERS MUST BE PUT ON BEFORE ELECTRONIC COMPONENTS ARE INSTALLED.

CHK	CHANGE NO	REV

THIS DRAWING FOR REFERENCE ONLY

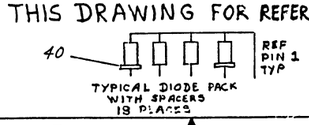

ETCH REV. D
P.C. DESIGN DATA BASE REV. DL

SIGNATURES	DATE
DRN. Kellgren	12-8-76
CHK'D. Kellgren	12-9-76
ENG. W Carter	29 APR 77
PROJ. ENG. W Carter	29 APR 77
PROD. [illegible]	[illegible]
SCALE 2/1	
SHT. 4 OF 4	
NEXT HIGHER ASSY. B-DD-5412149-0	

digital

TITLE 32 K SPC MEMORY

SIZE	CODE	NUMBER	REV
D	119	5412149-0-0	D

MS# 80989

"THIS DRAWING AND SPECIFICATIONS, HEREIN, ARE THE PROPERTY OF DIGITAL EQUIPMENT CORPORATION AND SHALL NOT BE REPRODUCED OR COPIED OR USED IN WHOLE OR IN PART AS THE BASIS FOR THE MANUFACTURE OR SALE OF ITEMS WITHOUT WRITTEN PERMISSION.
COPYRIGHT © 1976, DIGITAL EQUIPMENT CORPORATION"

BANK SELECTION

	NON INTER LEAVED	INTER LEAVED	A17	A16	A15	A14	A13
SA	EA+1	EA+1	S1-1	S1-2	S1-3	S1-4	S1-5
Ø	32K	64K	ON	ON	ON	ON	ON
4K	36K	68K	ON	ON	ON	ON	OFF
8K	4ØK	72K	ON	ON	ON	OFF	ON
12K	44K	76K	ON	ON	ON	OFF	OFF
16K	48K	8ØK	ON	ON	OFF	ON	ON
20K	52K	84K	ON	ON	OFF	ON	OFF
24K	56K	88K	ON	ON	OFF	OFF	ON
28K	6ØK	92K	ON	ON	OFF	OFF	OFF
32K	64K	96K	ON	OFF	ON	ON	ON
36K	68K	1ØØK	ON	OFF	ON	ON	OFF
4ØK	72K	1Ø4K	ON	OFF	ON	OFF	ON
44K	76K	1Ø8K	ON	OFF	ON	OFF	OFF
48K	8ØK	112K	ON	OFF	OFF	ON	ON
52K	84K	116K	ON	OFF	OFF	ON	OFF
56K	88K	12ØK	ON	OFF	OFF	OFF	ON
6ØK	92K	124K	ON	OFF	OFF	OFF	OFF
64K	96K	124K	OFF	ON	ON	ON	ON
68K	1ØØK	124K	OFF	ON	ON	ON	OFF
72K	1Ø4K	124K	OFF	ON	ON	OFF	ON
76K	1Ø8K	124K	OFF	ON	ON	OFF	OFF
8ØK	112K	124K	OFF	ON	OFF	ON	ON
84K	116K	124K	OFF	ON	OFF	ON	OFF
88K	12ØK	124K	OFF	ON	OFF	OFF	ON
92K	124K	124K	OFF	ON	OFF	OFF	OFF
96K	124K	124K	OFF	OFF	ON	ON	ON
1ØØK	124K	124K	OFF	OFF	ON	ON	OFF
1Ø4K	124K	124K	OFF	OFF	ON	OFF	ON
1Ø8K	124K	124K	OFF	OFF	ON	OFF	OFF
112K	124K	124K	OFF	OFF	OFF	ON	ON
116K	124K	124K	OFF	OFF	OFF	ON	OFF
12ØK	124K	124K	OFF	OFF	OFF	OFF	ON

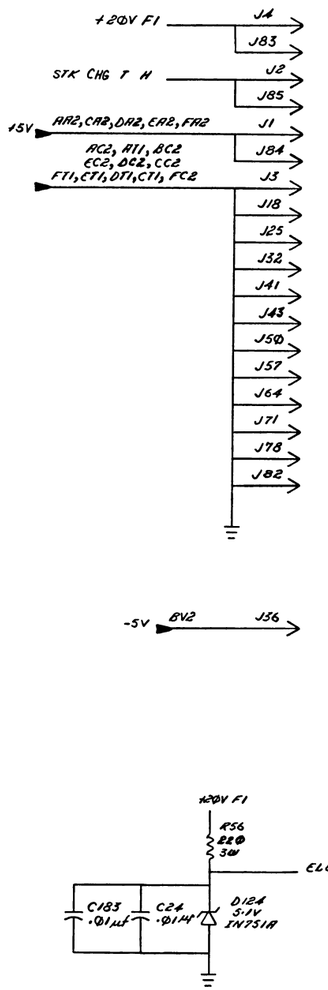

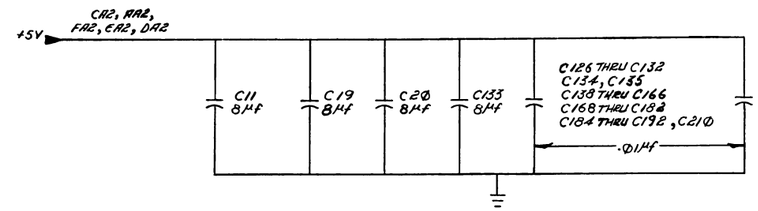

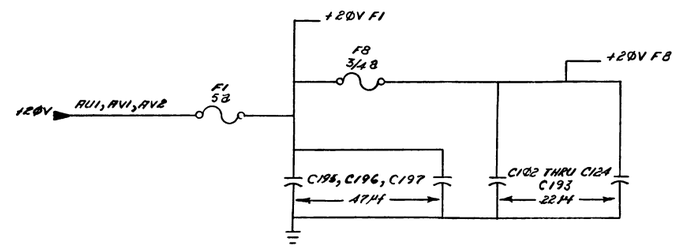

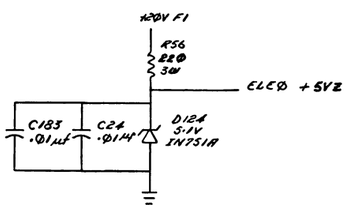

75325	8	9	16
8640	1	8	
8641	8	16	
7483A	12	5	
7475	12	5	
7442	8	16	
IC TYPE	GND	+5V	+20

REVISIONS			
CHANGE NO.	REV.		
G657-0001	C	R. Bonner	1-16-78
		W. COATES	1-16-78
			2-8-78

NOTES:

1. INTERLEAVE CONTROL IS ACHIEVED AS FOLLOWS:

(A) NON-INTERLEAVED.

(B) INTERLEAVED

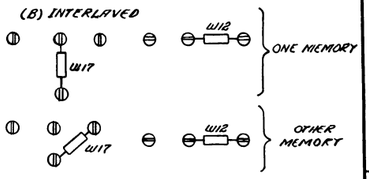

(C) THE BANK SELECTION SWITCH MUST BE SET THE SAME ON BOTH MEMORIES.

2. UNDER NORMAL CONDITIONS (W5, W6, OUT) THE MEMORY WILL NOT RESPOND TO ADDRESS BETWEEN 124K AND 126K, BECAUSE THESE ADDRESS ARE RESERVED FOR PERIPHERAL DEVICES ON THE UNIBUS.
FOR SPECIAL APPLICATIONS WHERE THE RANGE OF PERIPHERAL ADDRESS IS MORE RESTRICTED THAN THIS 4K RANGE THE MEMORY CAN BE CONFIGURED TO INCLUDE THE ADDITIONAL UNIBUS ADDRESSES AS FOLLOWS.

W5 IN, W6 OUT } 124K TO 126K

W5 IN, W6 IN } 124K TO 127K

NOTE THAT FOR SYSTEMS WITHOUT MEMORY MANAGEMENT, THIS MEANS THE USEFUL VIRTUAL ADDRESS SPACE FOR MEMORY CAN BE EXTENDED FROM 28K TO 3ØK OR 31K BY SACRIFICING SOME PERIPHERAL SPACE.

CAUTION:
SOME DIGITAL SOFTWARE MAY NOT BE COMPATIBLE WITH THE REDUCED PERIPHERAL ADDRESS SPACE. TO ASSURE COMPATIBILITY W5 AND W6 MUST BE OUT.

3. SCHEMATIC FOR M228 MEMORY STACK IS SHOWN ON CS-5412149-Ø-1.

4.

MODE		WR BYTE ØL / WR BYTE 1L	CLOCKØ H / CLOCK 1 H	CLEARØL / CLEAR 1L	STROBE LHLBH, UHLBH / STROBE LHUBH, UHUBH	OUT EN L
DAT1	BUS CØ=H, BUS C1=H	H / H	L / L	⊔ / ⊔	⊓ / ⊓	⊔
DATØ	BUS CØ=H, BUS C1=L	L / L	⊓ / ⊓	H / H	L / L	H
DATØB	BUS CØ=L, BUS C1=L, BUS AØ=H (LO BYTE)	L / H	⊓ / L	H / ⊔	L / ⊓	H
	BUS CØ=L, BUS C1=L, BUS AØ=L (UP BYTE)	H / L	L / ⊓	⊔ / H	⊓ / L	H

5. W1, W2, W3, W4, W9, W10, W11, MUST BE INSTALLED BEFORE MEMORY TEST.

6. W13 AND W8 CONTROL BITS 16 AND 17. (A) FOR 16 BIT SYSTEM W7 AND W8 OUT. (B) FOR 18 BIT SYSTEM W7 AND W8 IN.

DRN. Joseph Peters	1/23/77	FIRST USED ON MM11-YP
CHK'D'BY Manuel	29APR77	digital
ENG. W. Coates	29APR77	TITLE (ELEØ) 32K SPEC ELECTRONICS
PROJ. ENG. W. Coates	29APR77	
PROD.	25APR77	
NEXT HIGHER ASSY.	B-DD-G657-Ø	SIZE D CODE CS NUMBER G657-Ø-1 REV. C
SCALE NONE		
SHEET 1 OF 18		DIST.

SIZE D CODE CS NUMBER G657-Ø-1 REV. C

"THIS DRAWING AND SPECIFICATIONS, HEREIN, ARE THE PROPERTY OF DIGITAL EQUIPMENT CORPORATION AND SHALL NOT BE REPRODUCED OR COPIED OR USED IN WHOLE OR IN PART AS THE BASIS FOR THE MANUFACTURE OR SALE OF ITEMS WITHOUT WRITTEN PERMISSION. COPYRIGHT © 1976 DIGITAL EQUIPMENT CORPORATION"

NOTE: ALL DIODES D672
UNLESS OTHERWISE SPECIFIED

BUS GRANT LINES
DK2 - DL2
DM2 - DN2
DP2 - DR2
DS2 - DT2
CA1 - CB1

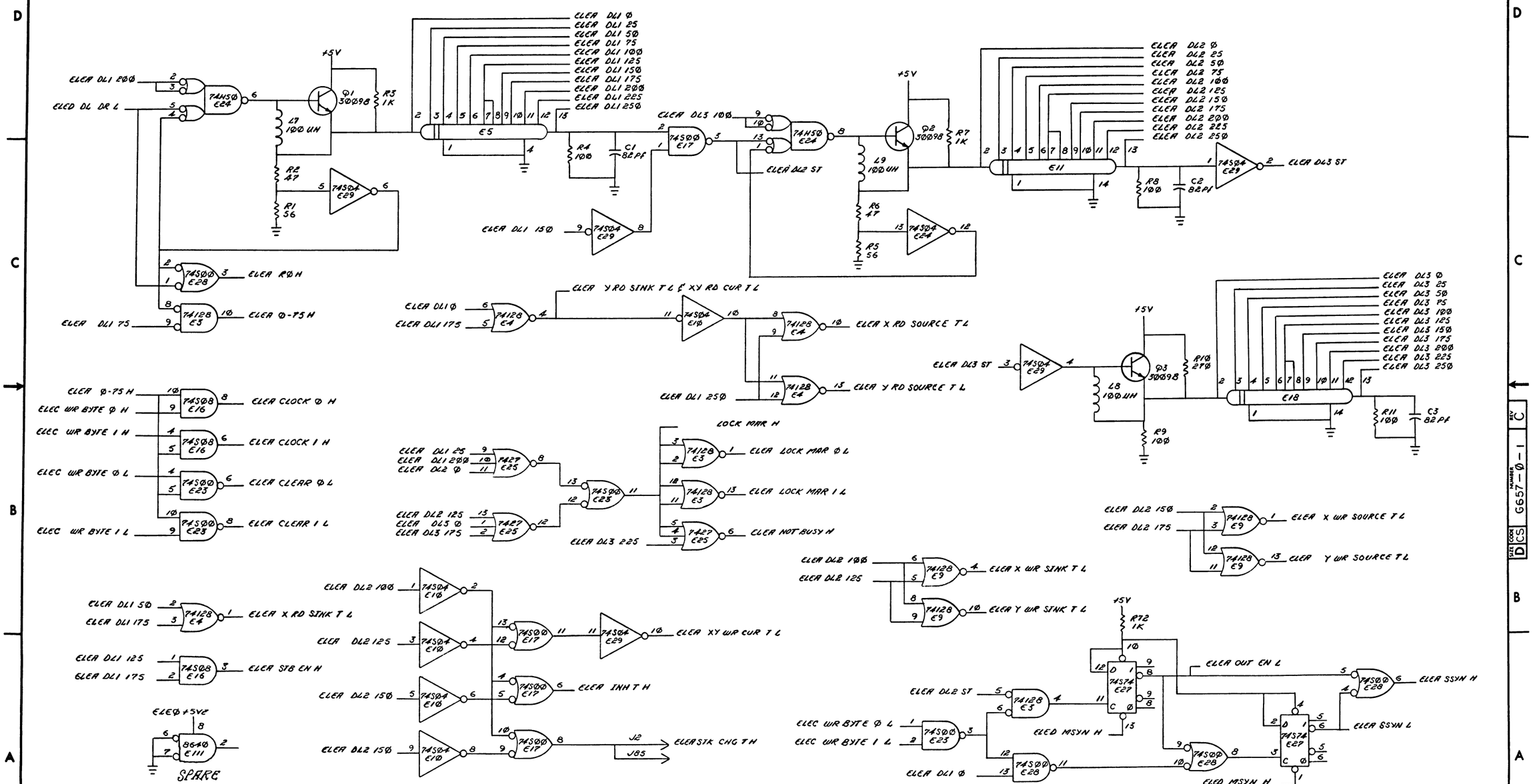

REVISIONS		
CHK	CHANGE NO.	REV

TITLE	SIZE	CODE	NUMBER	REV.
32K SPC ELECTRONICS (ELEA)	D	CS	G657-0-1	C
SCALE NONE	SHEET 2 OF 18	DIST.		

DEC FORM NO. DRD 138

"THIS DRAWING AND SPECIFICATIONS, HEREIN, ARE THE PROPERTY OF DIGITAL EQUIPMENT CORPORATION AND SHALL NOT BE REPRODUCED OR COPIED OR USED IN WHOLE OR IN PART AS THE BASIS FOR THE MANUFACTURE OR SALE OF ITEMS WITHOUT WRITTEN PERMISSION.
COPYRIGHT © /1976 DIGITAL EQUIPMENT CORPORATION"

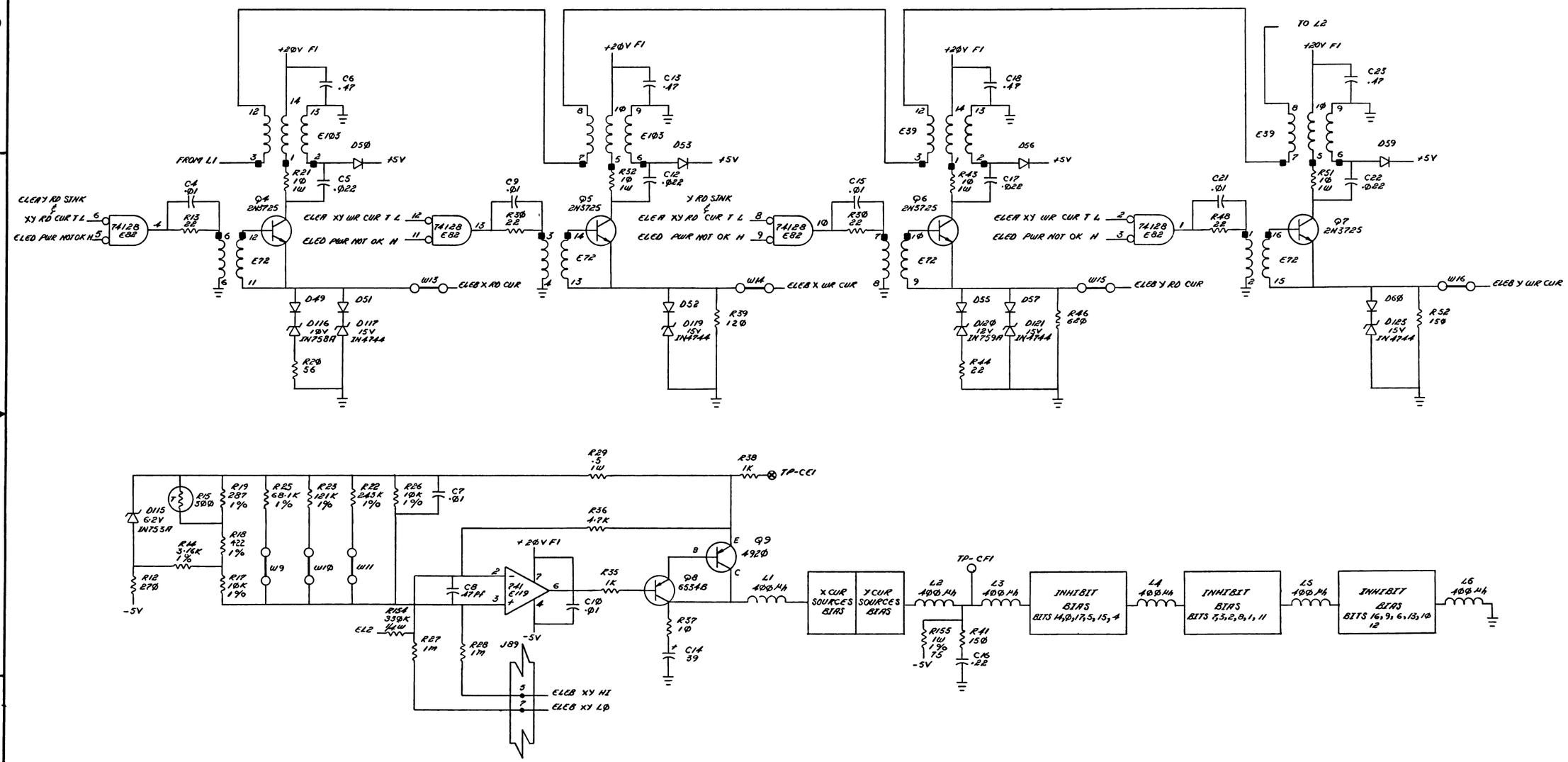

REVISIONS		
CHK	CHANGE NO.	REV

TITLE	SIZE	CODE	NUMBER	REV.
32KSPC ELECTRONICS (ELEB)	D	CS	G657-0-1	C
SCALE NONE	SHEET 3 OF 18	DIST.		

DCS G657-0-1 REV C

"THIS DRAWING AND SPECIFICATIONS, HEREIN, ARE THE PROPERTY OF DIGITAL EQUIPMENT CORPORATION AND SHALL NOT BE REPRODUCED OR COPIED OR USED IN WHOLE OR IN PART AS THE BASIS FOR THE MANUFACTURE OR SALE OF ITEMS WITHOUT WRITTEN PERMISSION.
COPYRIGHT © 1976 DIGITAL EQUIPMENT CORPORATION"

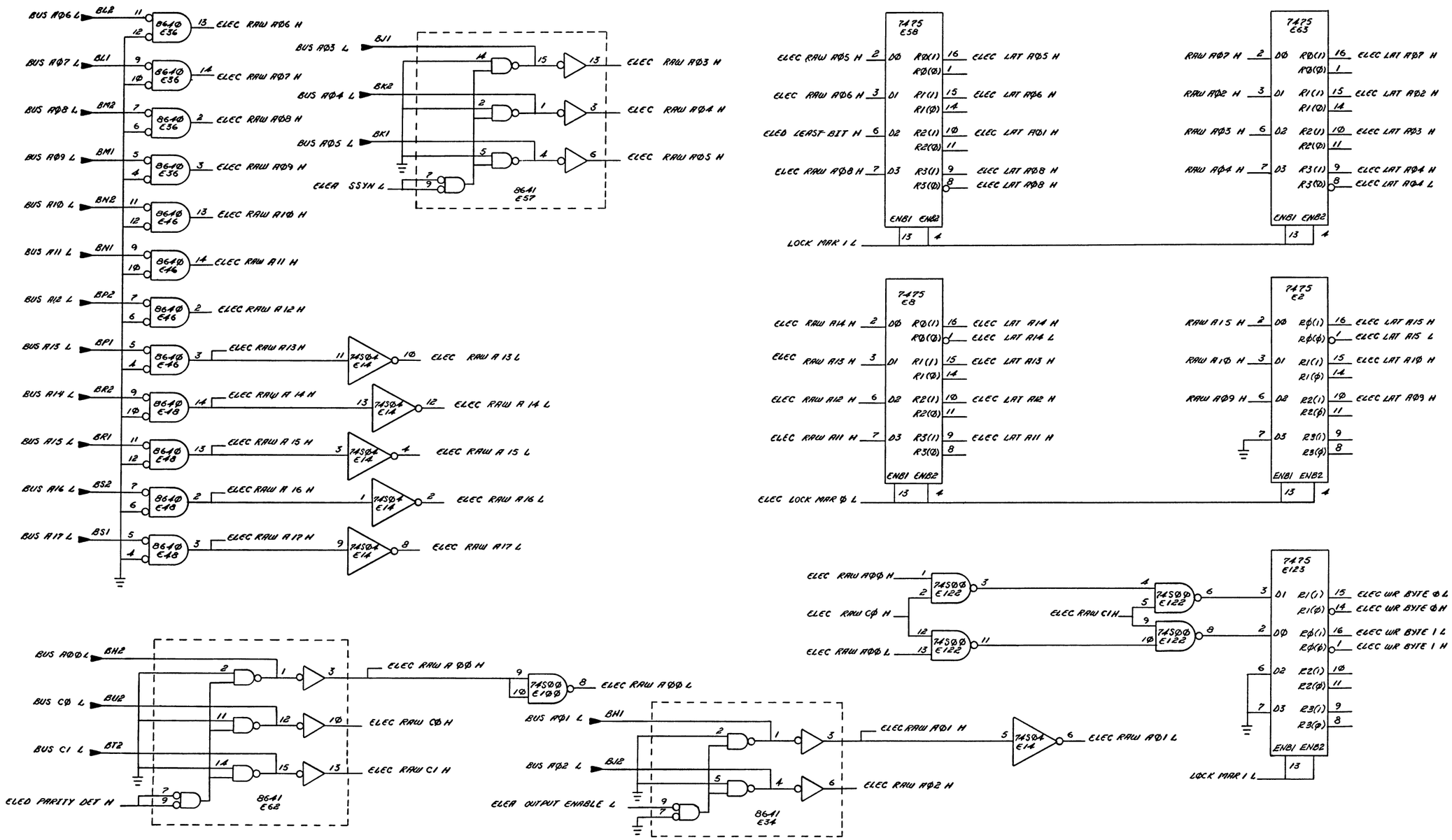

REVISIONS		
CHK	CHANGE NO	REV

TITLE	SIZE	CODE	NUMBER	REV.
32K SPC ELECTRONICS (ELEC)	D	CS	G657-0-1	C
SCALE NONE	SHEET 4 OF 18	DIST.		

DEC FORM NO. MD 136

"THIS DRAWING AND SPECIFICATIONS, HEREIN, ARE THE PROPERTY OF DIGITAL EQUIPMENT CORPORATION AND SHALL NOT BE REPRODUCED OR COPIED OR USED IN WHOLE OR IN PART AS THE BASIS FOR THE MANUFACTURE OR SALE OF ITEMS WITHOUT WRITTEN PERMISSION.
COPYRIGHT © 1976 DIGITAL EQUIPMENT CORPORATION"

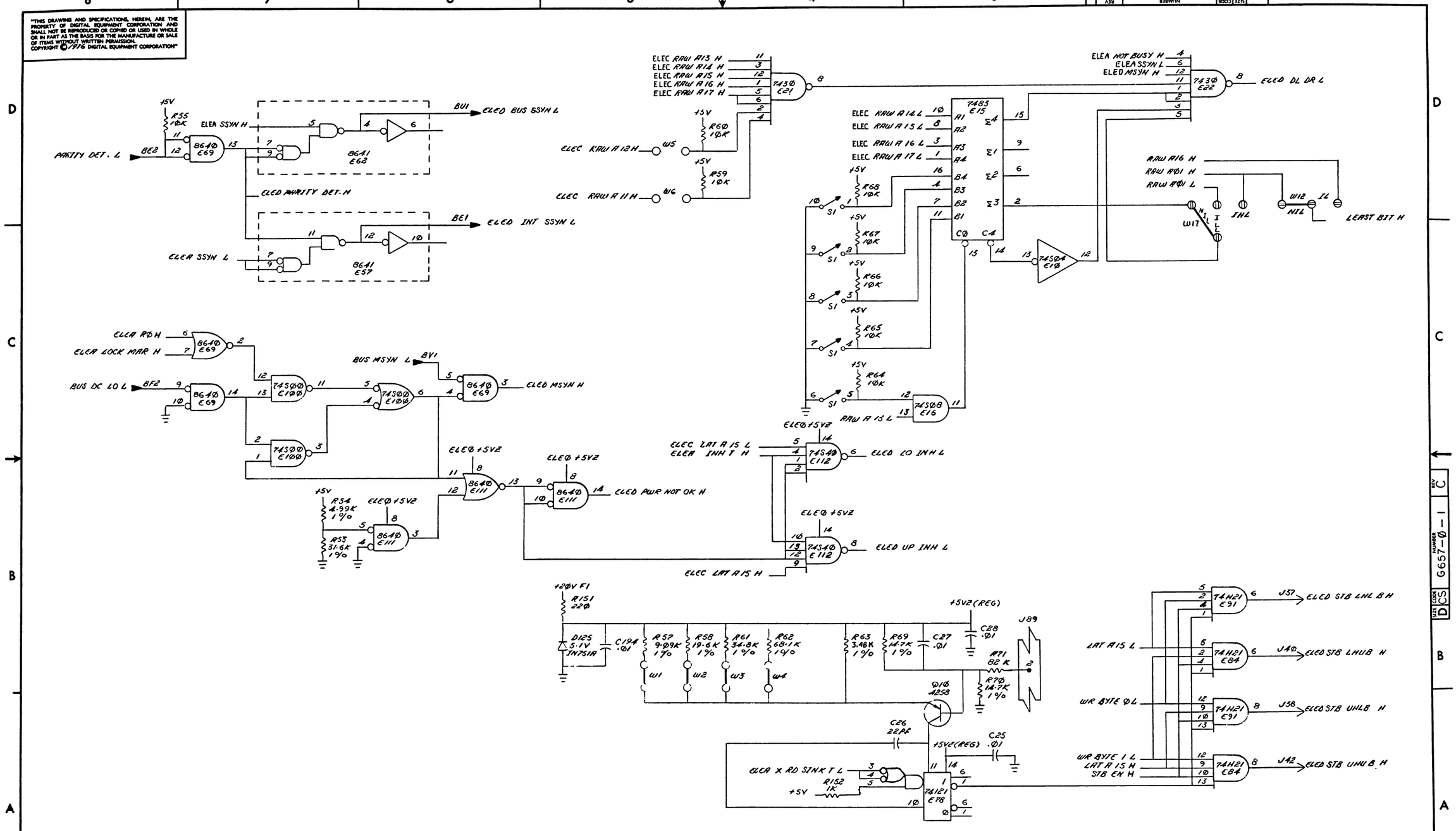

REVISIONS		
CHK	CHANGE NO	REV

TITLE	SIZE	CODE	NUMBER	REV.
32K SPC ELECTRONICS (ELED)	D	CS	G657-0-1	C
SCALE NONE	SHEET 5 OF 18	DIST.		

DEC FORM NO. DRD 138

"THIS DRAWING AND SPECIFICATIONS, HEREIN, ARE THE PROPERTY OF DIGITAL EQUIPMENT CORPORATION AND SHALL NOT BE LOANED AT, OR COPIED OR USED IN WHOLE OR IN PART AS THE BASIS FOR THE MANUFACTURE OR SALE OF ITEMS WITHOUT WRITTEN PERMISSION.
COPYRIGHT © 1976 DIGITAL EQUIPMENT CORPORATION"

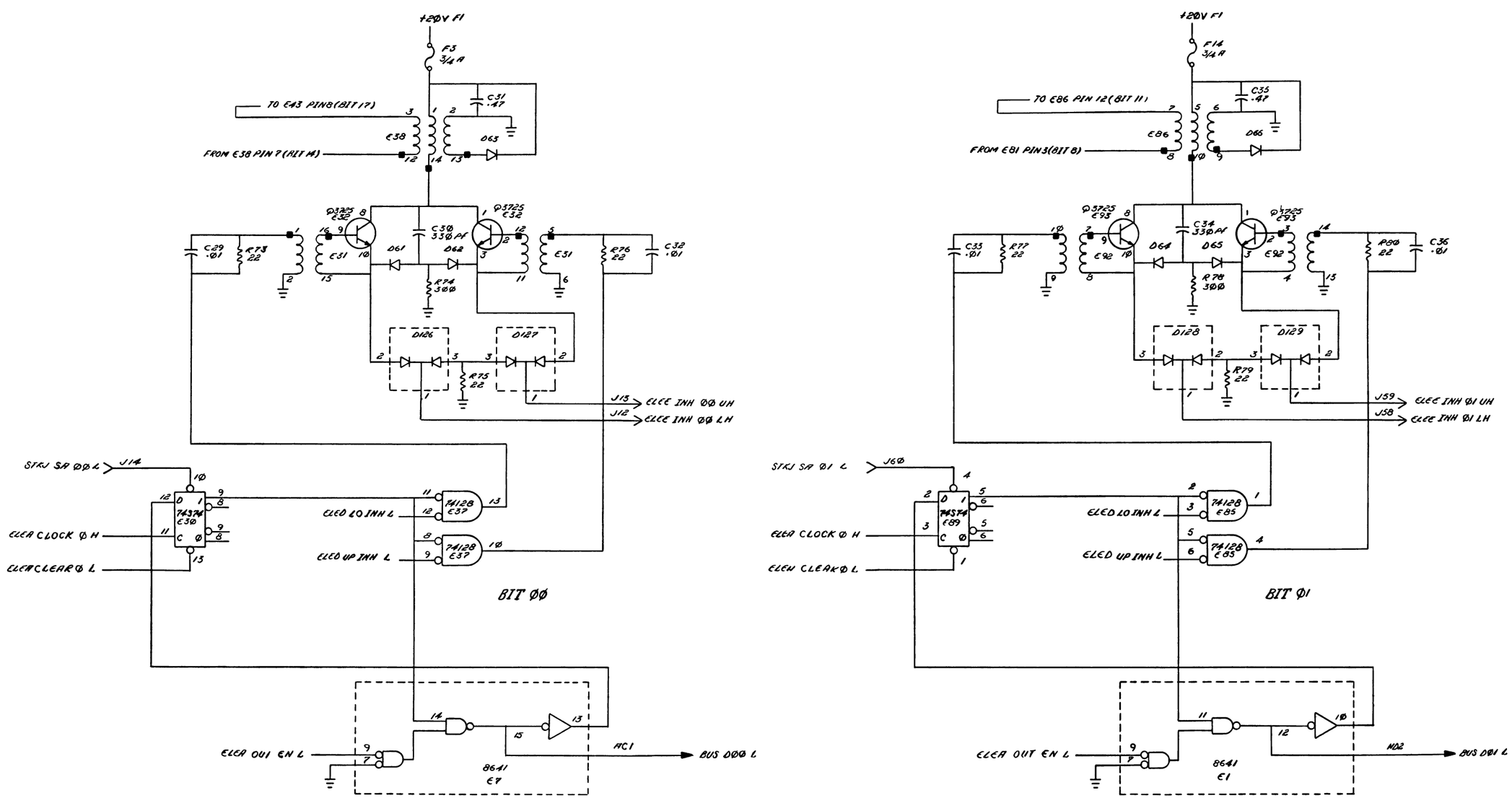

REVISIONS		
CHK	CHANGE NO	REV.

TITLE	SIZE	CODE	NUMBER	REV.
32K SPC ELECTRONICS (ELEE)	D	CS	G657-0-1	C
SCALE NONE	SHEET 6 OF 18	DIST.		

"THIS DRAWING AND SPECIFICATIONS, HEREIN, ARE THE PROPERTY OF DIGITAL EQUIPMENT CORPORATION AND SHALL NOT BE REPRODUCED OR COPIED OR USED IN WHOLE OR IN PART AS THE BASIS FOR THE MANUFACTURE OR SALE OF ITEMS WITHOUT WRITTEN PERMISSION
COPYRIGHT © 1976 DIGITAL EQUIPMENT CORPORATION"

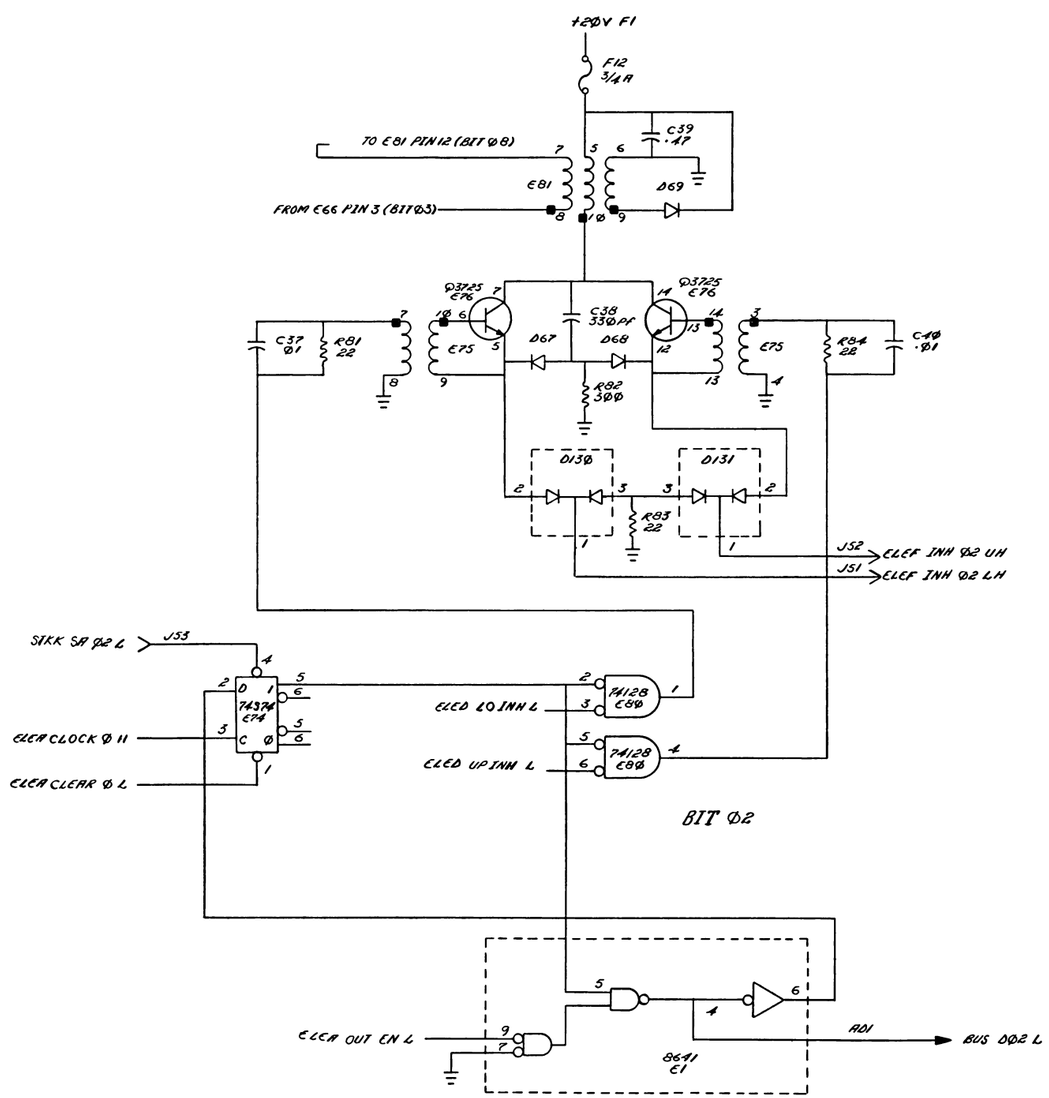

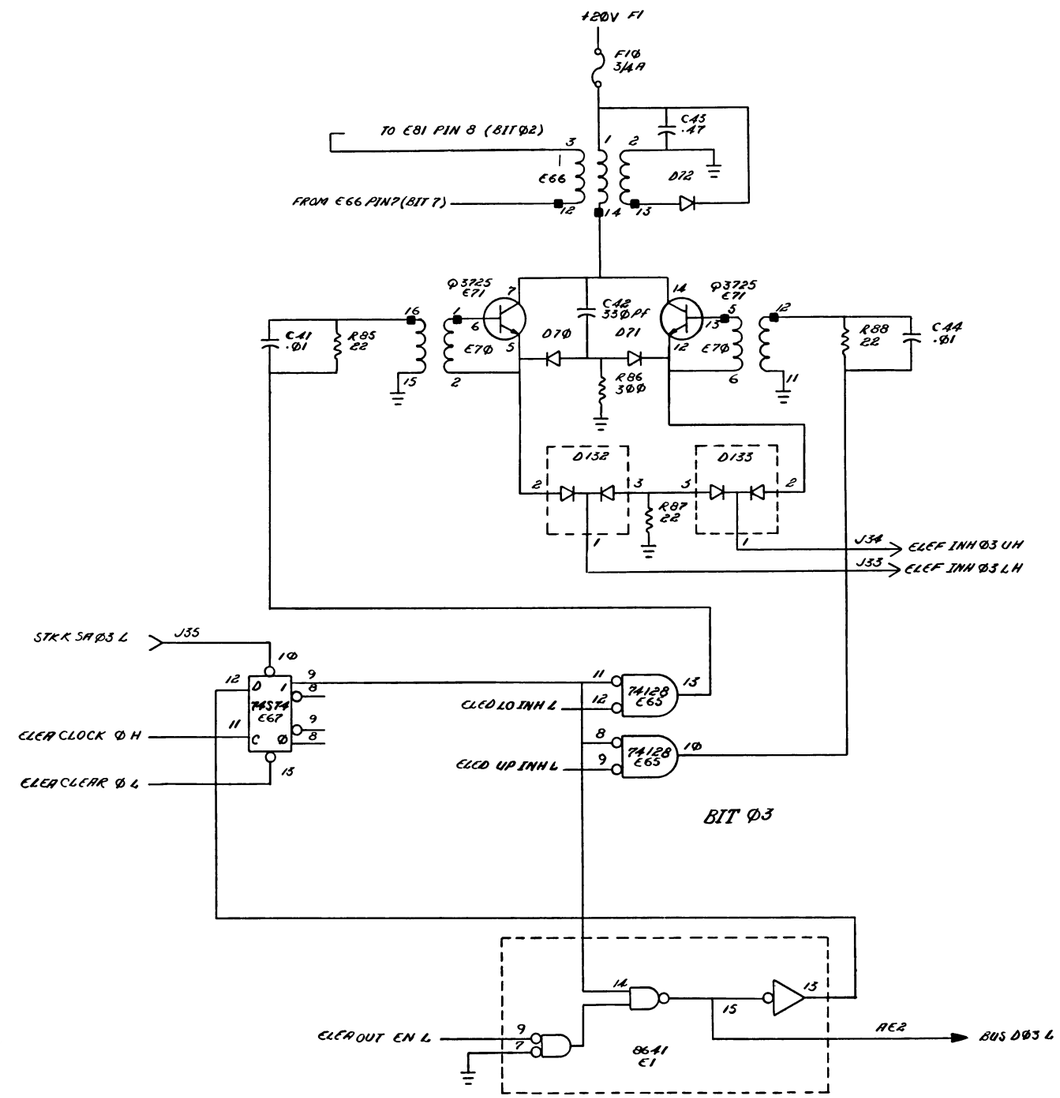

REVISIONS		
CHK	CHANGE NO	REV

TITLE	SIZE	CODE	NUMBER	REV.
32K SPC ELECTRONICS (ELEF)	D	CS	G657-0-1	C
SCALE NONE	SHEET 7 OF 18	DIST.		

"THIS DRAWING AND SPECIFICATIONS, HEREIN, ARE THE PROPERTY OF DIGITAL EQUIPMENT CORPORATION AND SHALL NOT BE REPRODUCED OR COPIED OR USED IN WHOLE OR IN PART AS THE BASIS FOR THE MANUFACTURE OR SALE OF ITEMS WITHOUT WRITTEN PERMISSION
COPYRIGHT © 1976 DIGITAL EQUIPMENT CORPORATION"

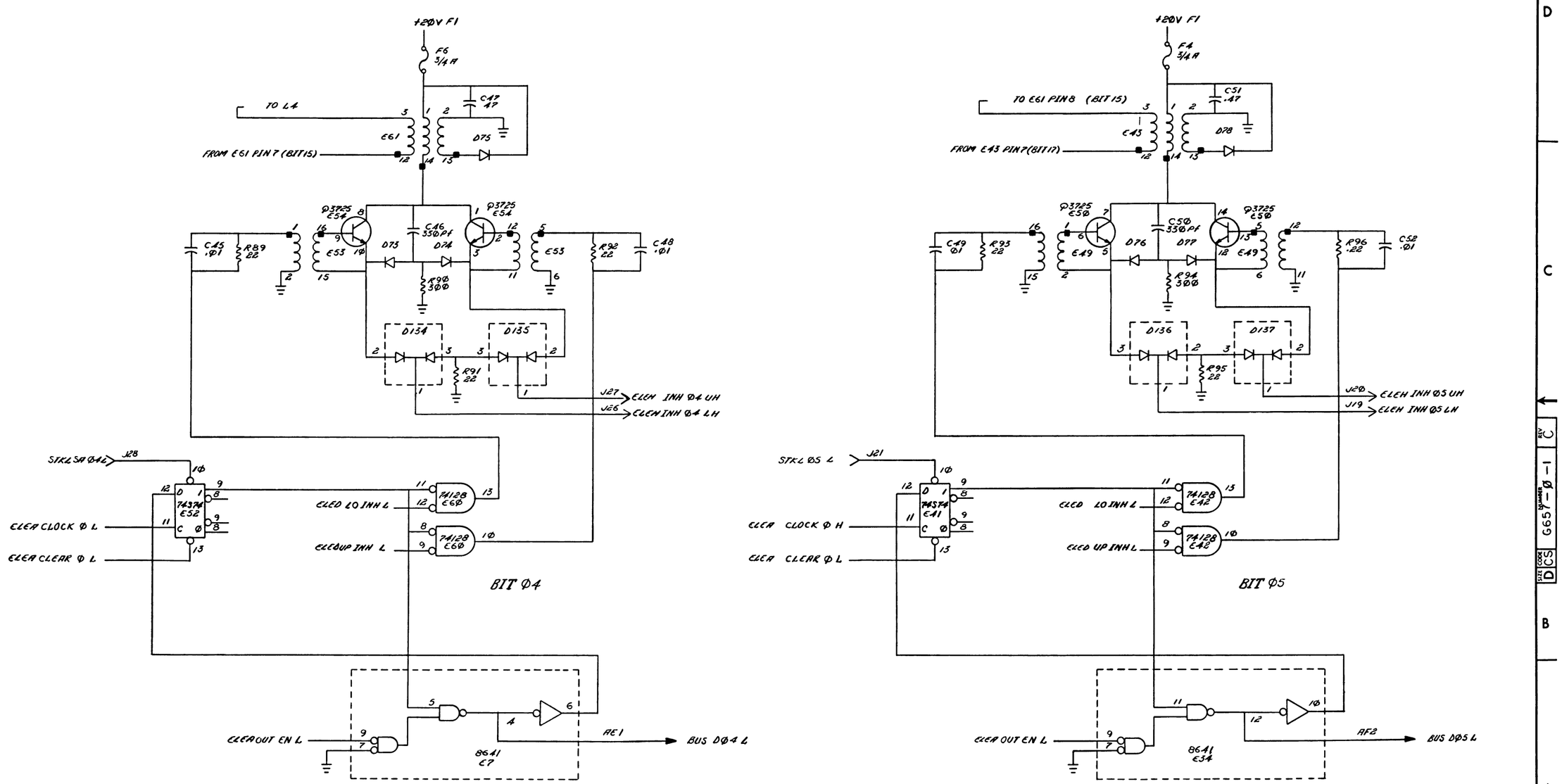

REVISIONS		
CHK	CHANGE NO	REV.

TITLE	SIZE	CODE	NUMBER	REV.
32K SPC ELECTRONICS (ELEH)	D	CS	G657-Ø-1	C
SCALE NONE	SHEET 8 OF 18	DIST.		

"THIS DRAWING AND SPECIFICATIONS, HEREIN, ARE THE PROPERTY OF DIGITAL EQUIPMENT CORPORATION AND SHALL NOT BE REPRODUCED OR COPIED OR USED IN WHOLE OR IN PART AS THE BASIS FOR THE MANUFACTURE OR SALE OF ITEMS WITHOUT WRITTEN PERMISSION
COPYRIGHT © 1976 DIGITAL EQUIPMENT CORPORATION"

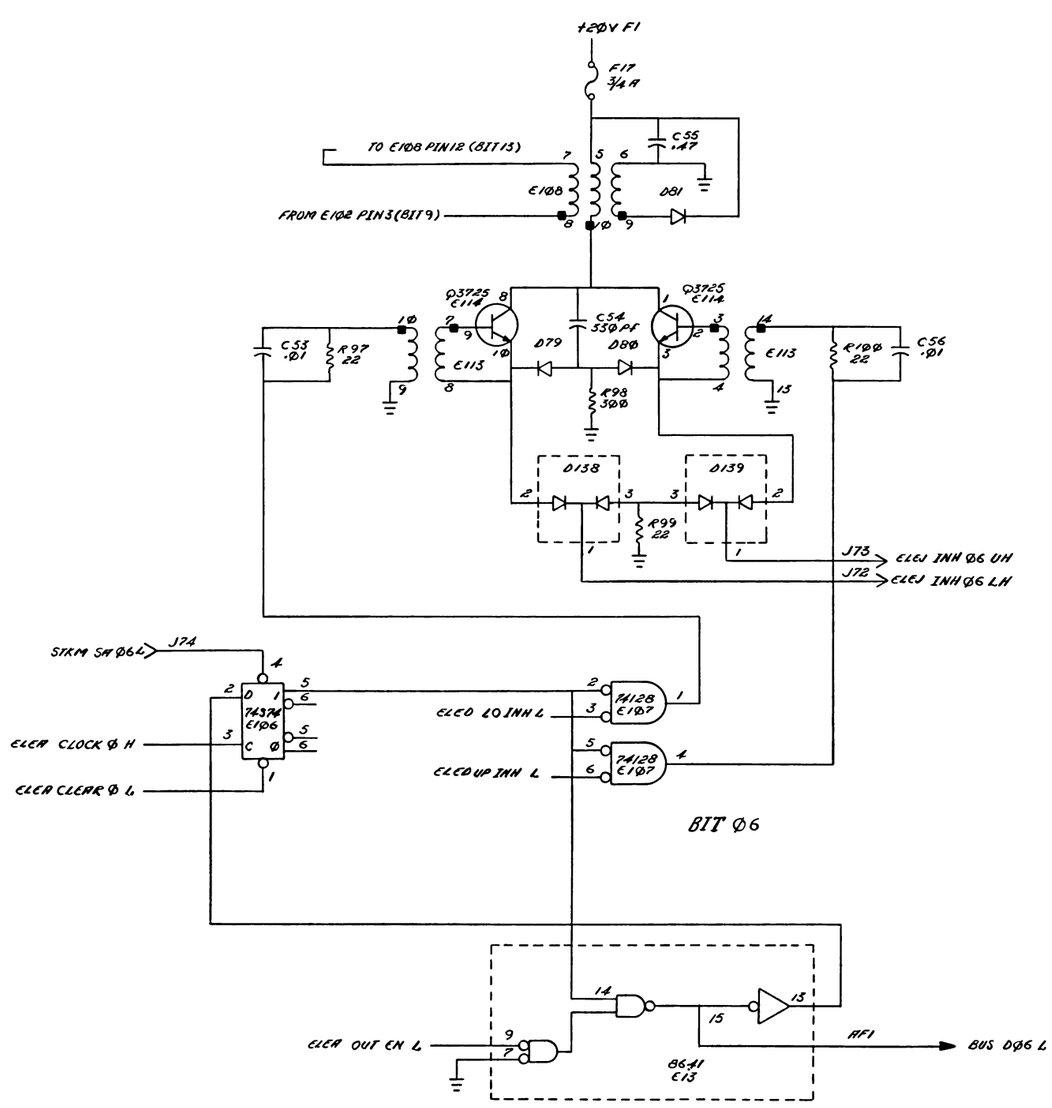

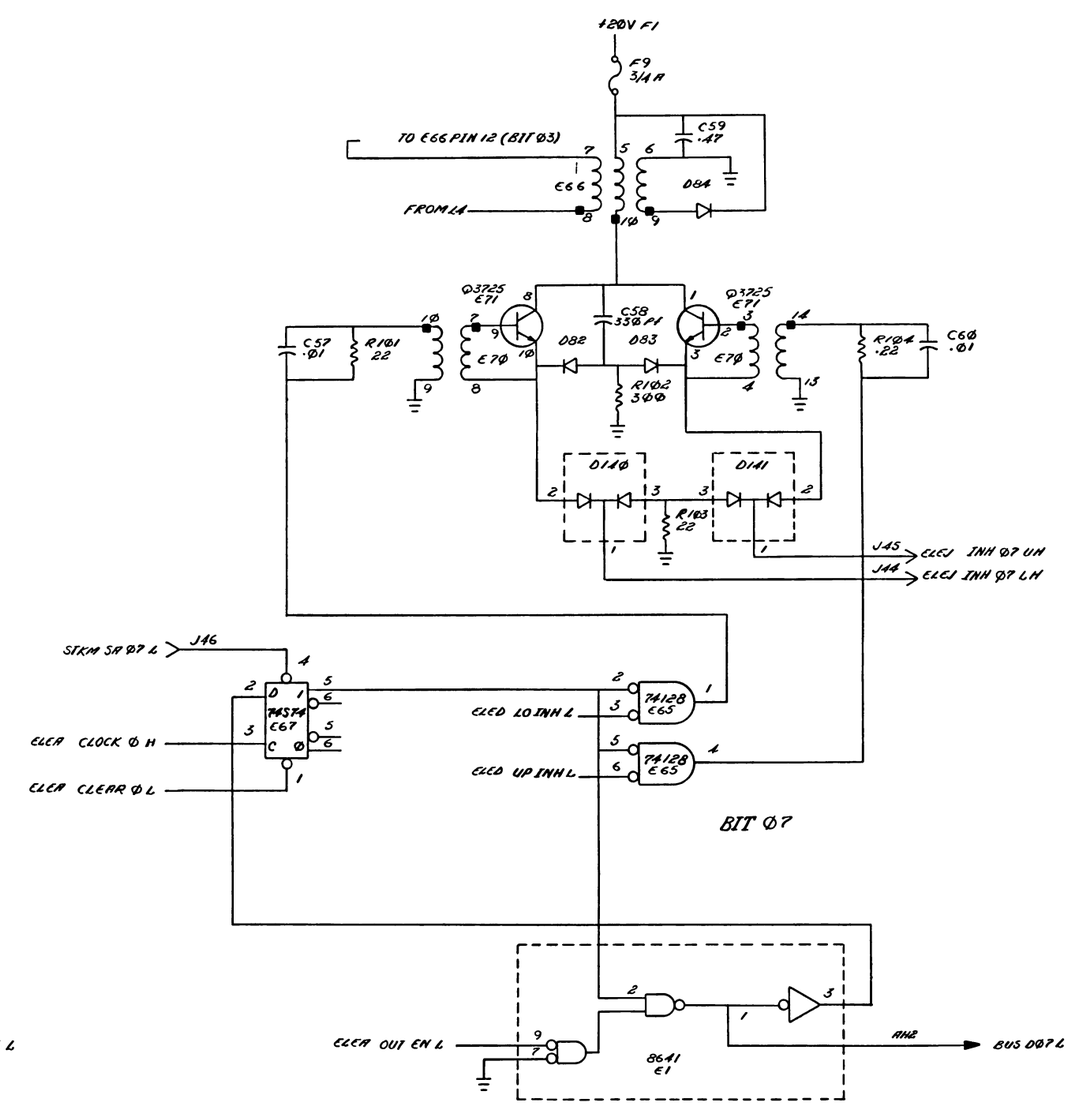

REVISIONS		
CHK	CHANGE NO	REV

TITLE	SIZE	CODE	NUMBER	REV.
32K SPC ELECTRONICS (ELEJ)	D	CS	G657-Ø-1	C
SCALE NONE	SHEET 9 OF 18	DIST.		

"THIS DRAWING AND SPECIFICATIONS, HEREIN, ARE THE PROPERTY OF DIGITAL EQUIPMENT CORPORATION AND SHALL NOT BE REPRODUCED OR COPIED OR USED IN WHOLE OR IN PART AS THE BASIS FOR THE MANUFACTURE OR SALE OF ITEMS WITHOUT WRITTEN PERMISSION.
COPYRIGHT © 1976 DIGITAL EQUIPMENT CORPORATION"

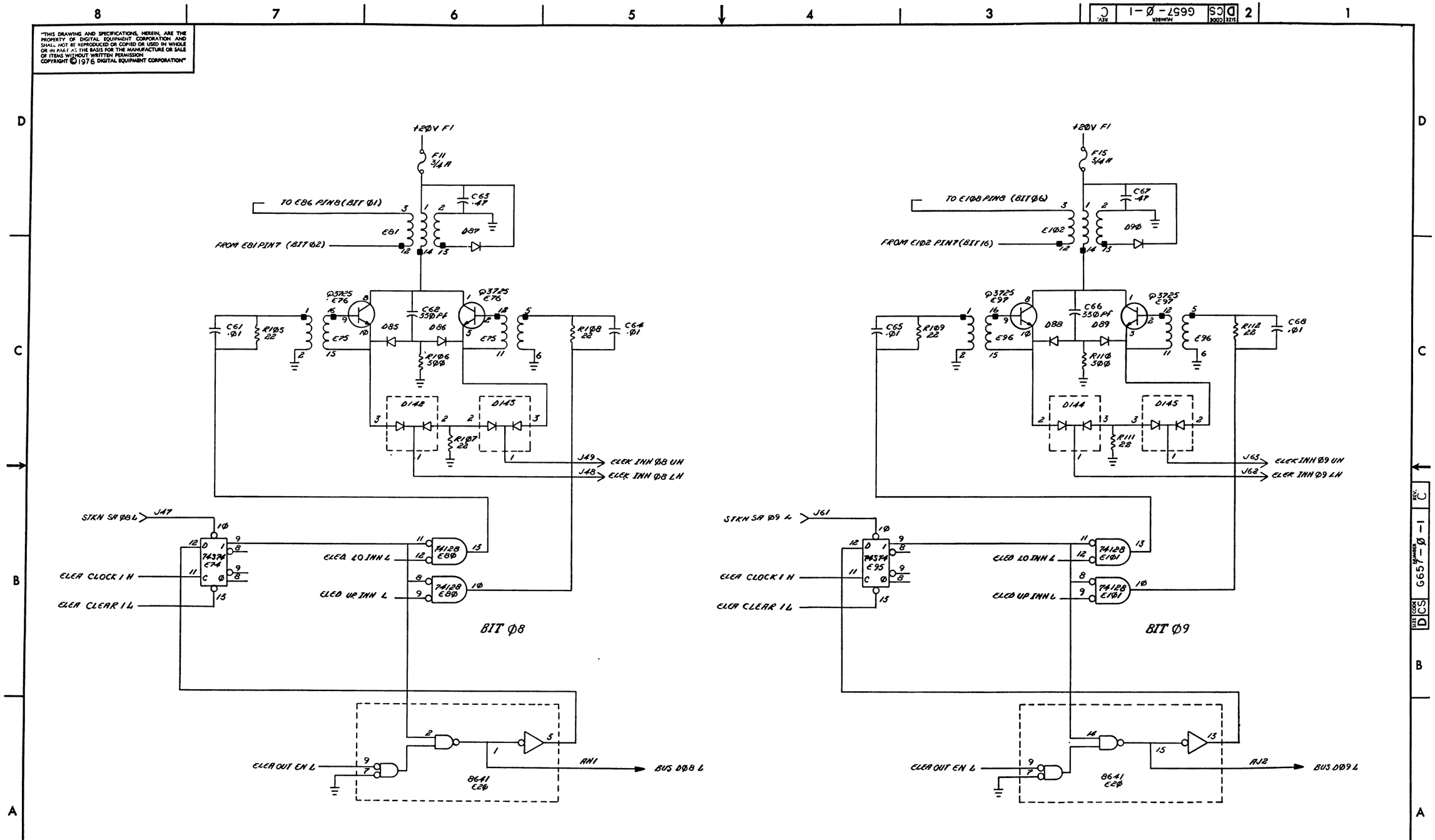

REVISIONS		
CHK	CHANGE NO	REV.

TITLE	SIZE	CODE	NUMBER	REV.
32K SPC ELECTRONICS (ELEK)	D	CS	G657-Ø-1	C
SCALE NONE	SHEET 10 OF 18	DIST.		

"THIS DRAWING AND SPECIFICATIONS, HEREIN, ARE THE PROPERTY OF DIGITAL EQUIPMENT CORPORATION AND SHALL NOT BE REPRODUCED OR COPIED OR USED IN WHOLE OR IN PART AS THE BASIS FOR THE MANUFACTURE OR SALE OF ITEMS WITHOUT WRITTEN PERMISSION
COPYRIGHT © 1976 DIGITAL EQUIPMENT CORPORATION"

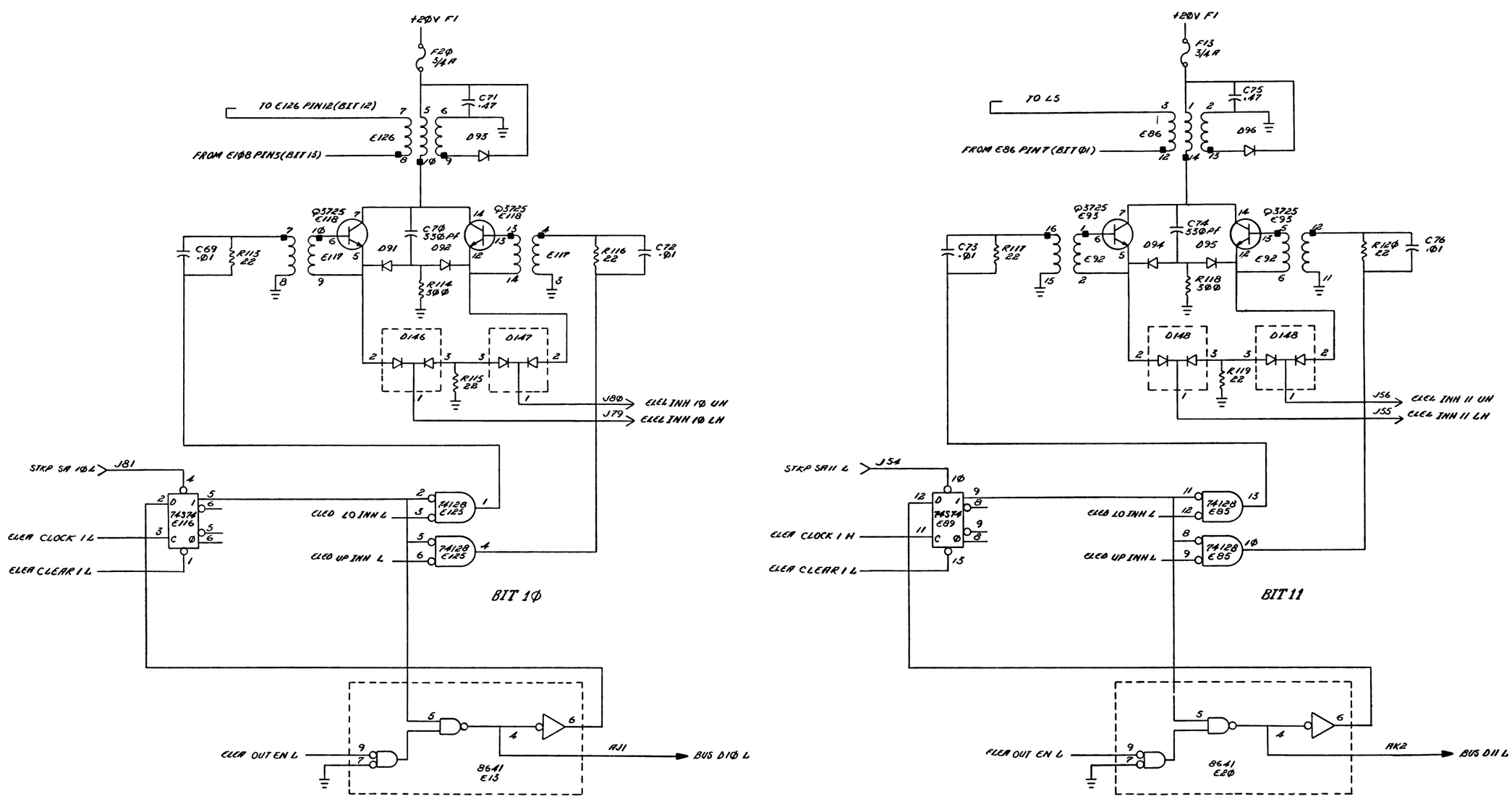

REVISIONS		
CHK	CHANGE NO	REV.

TITLE	SIZE	CODE	NUMBER	REV.
32K SPC ELECTRONICS (ELEL)	D	CS	G657-Ø-1	C
SCALE NONE	SHEET 11 OF 18	DIST.		

"THIS DRAWING AND SPECIFICATIONS, HEREIN, ARE THE PROPERTY OF DIGITAL EQUIPMENT CORPORATION AND SHALL NOT BE REPRODUCED OR COPIED OR USED IN WHOLE OR IN PART AS THE BASIS FOR THE MANUFACTURE OR SALE OF ITEMS WITHOUT WRITTEN PERMISSION
COPYRIGHT © 1976 DIGITAL EQUIPMENT CORPORATION"

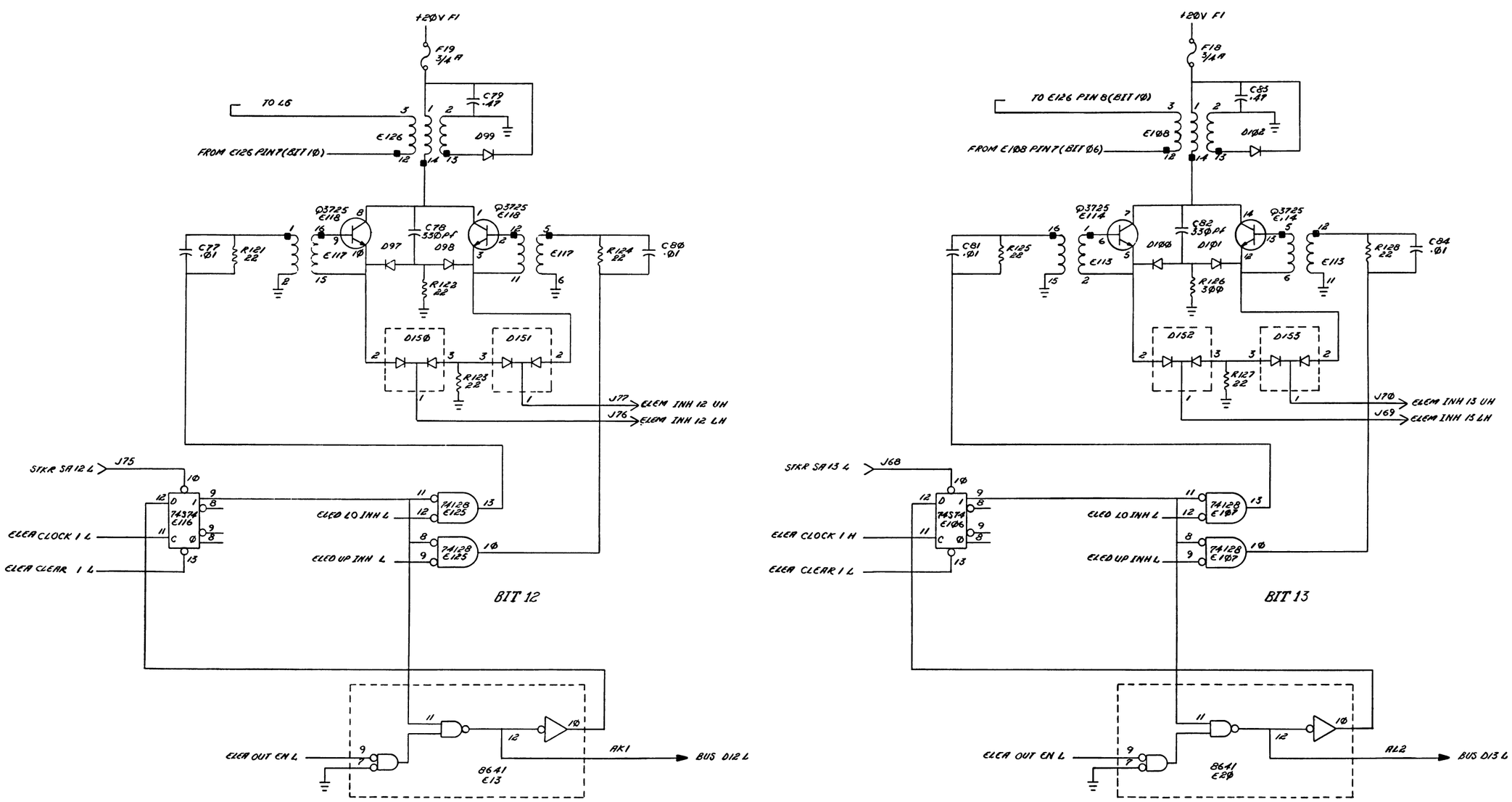

REVISIONS		
CHK	CHANGE NO	REV.

TITLE	SIZE	CODE	NUMBER	REV.
32K SPC ELECTRONICS (ELEM)	D	CS	G657-0-1	C
SCALE NONE	SHEET 12 OF 18	DIST.		

"THIS DRAWING AND SPECIFICATIONS, HEREIN, ARE THE PROPERTY OF DIGITAL EQUIPMENT CORPORATION AND SHALL NOT BE REPRODUCED OR COPIED OR USED IN WHOLE OR IN PART AS THE BASIS FOR THE MANUFACTURE OR SALE OF ITEMS WITHOUT WRITTEN PERMISSION. COPYRIGHT © 1976 DIGITAL EQUIPMENT CORPORATION"

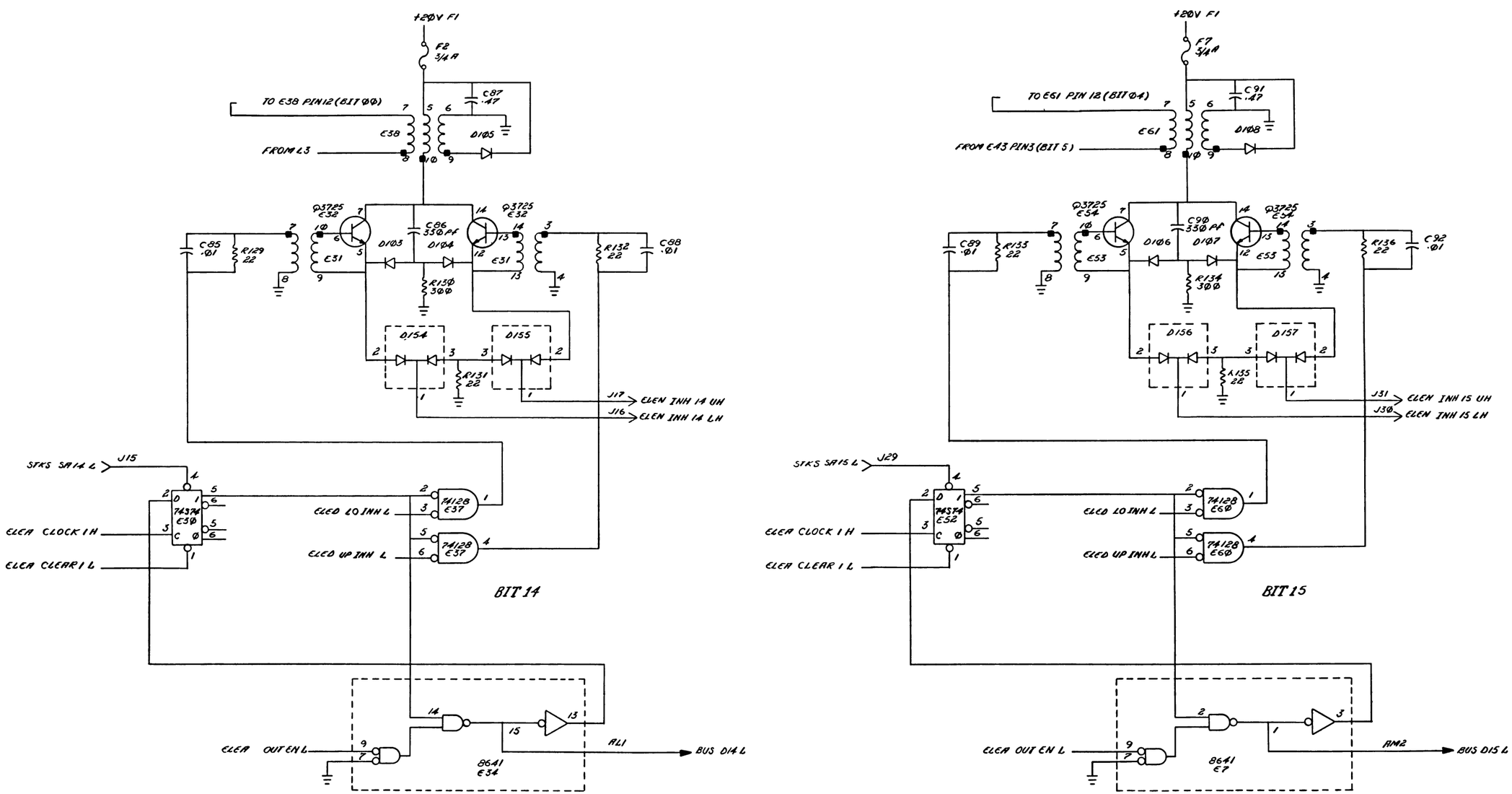

REVISIONS		
CHK	CHANGE NO	REV.

TITLE	SIZE	CODE	NUMBER	REV.
32K SPC ELECTRONICS (ELEN)	D	CS	G657-Ø-1	C
SCALE NONE	SHEET 13 OF 18	DIST.		

"THIS DRAWING AND SPECIFICATIONS, HEREIN, ARE THE PROPERTY OF DIGITAL EQUIPMENT CORPORATION AND SHALL NOT BE REPRODUCED OR COPIED OR USED IN WHOLE OR IN PART AS THE BASIS FOR THE MANUFACTURE OR SALE OF ITEMS WITHOUT WRITTEN PERMISSION
COPYRIGHT © 1976 DIGITAL EQUIPMENT CORPORATION"

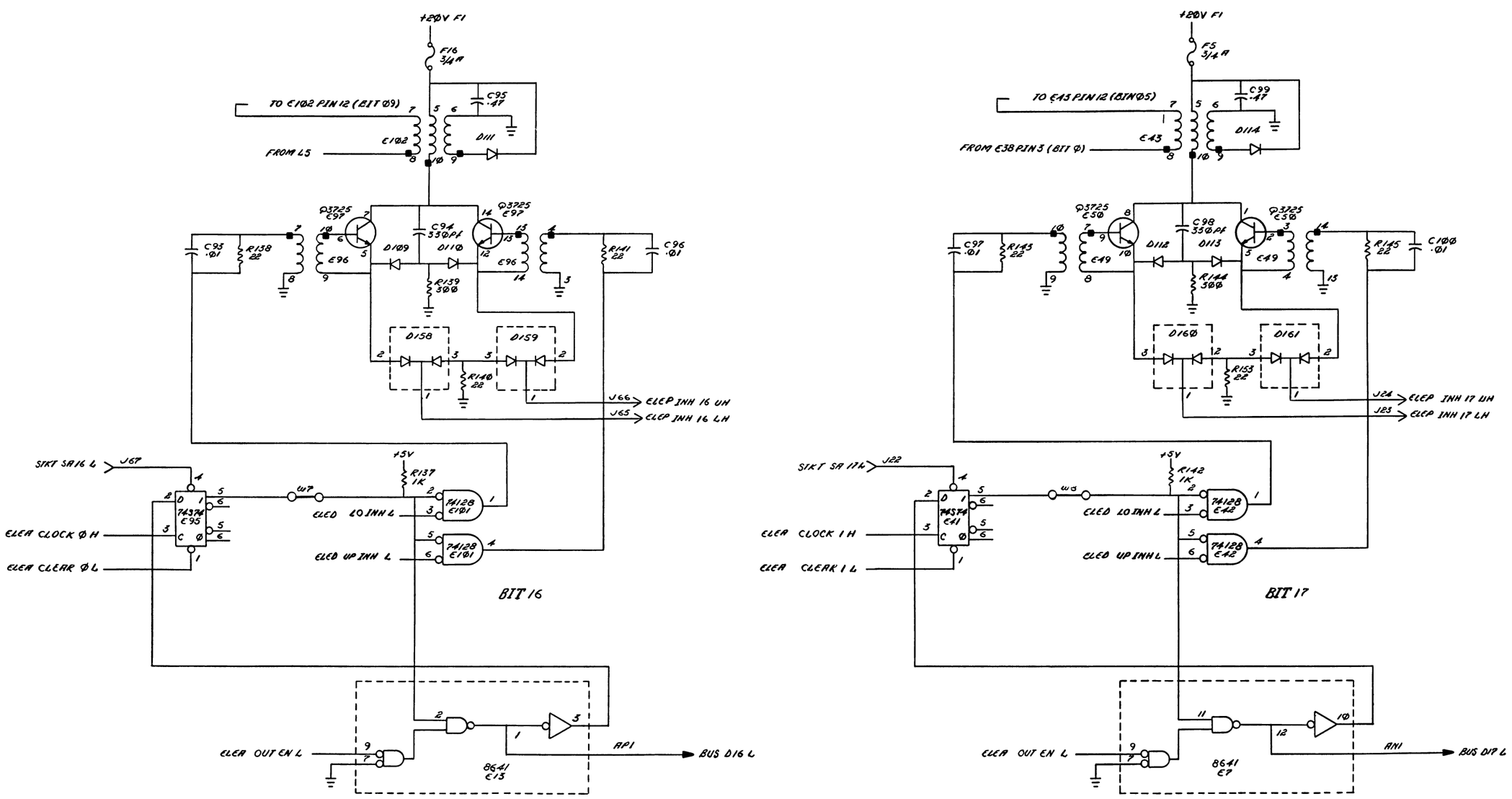

REVISIONS		
CHK	CHANGE NO	REV.

TITLE	SIZE	CODE	NUMBER	REV.
32K SPC ELECTRONICS (ELEP)	D	CS	G657-0-1	C
SCALE NONE	SHEET 14 OF 18	DIST.		

"THIS DRAWING AND SPECIFICATIONS, HEREIN, ARE THE PROPERTY OF DIGITAL EQUIPMENT CORPORATION AND SHALL NOT BE REPRODUCED OR COPIED OR USED IN WHOLE OR IN PART AS THE BASIS FOR THE MANUFACTURE OR SALE OF ITEMS WITHOUT WRITTEN PERMISSION. COPYRIGHT © 1976 DIGITAL EQUIPMENT CORPORATION"

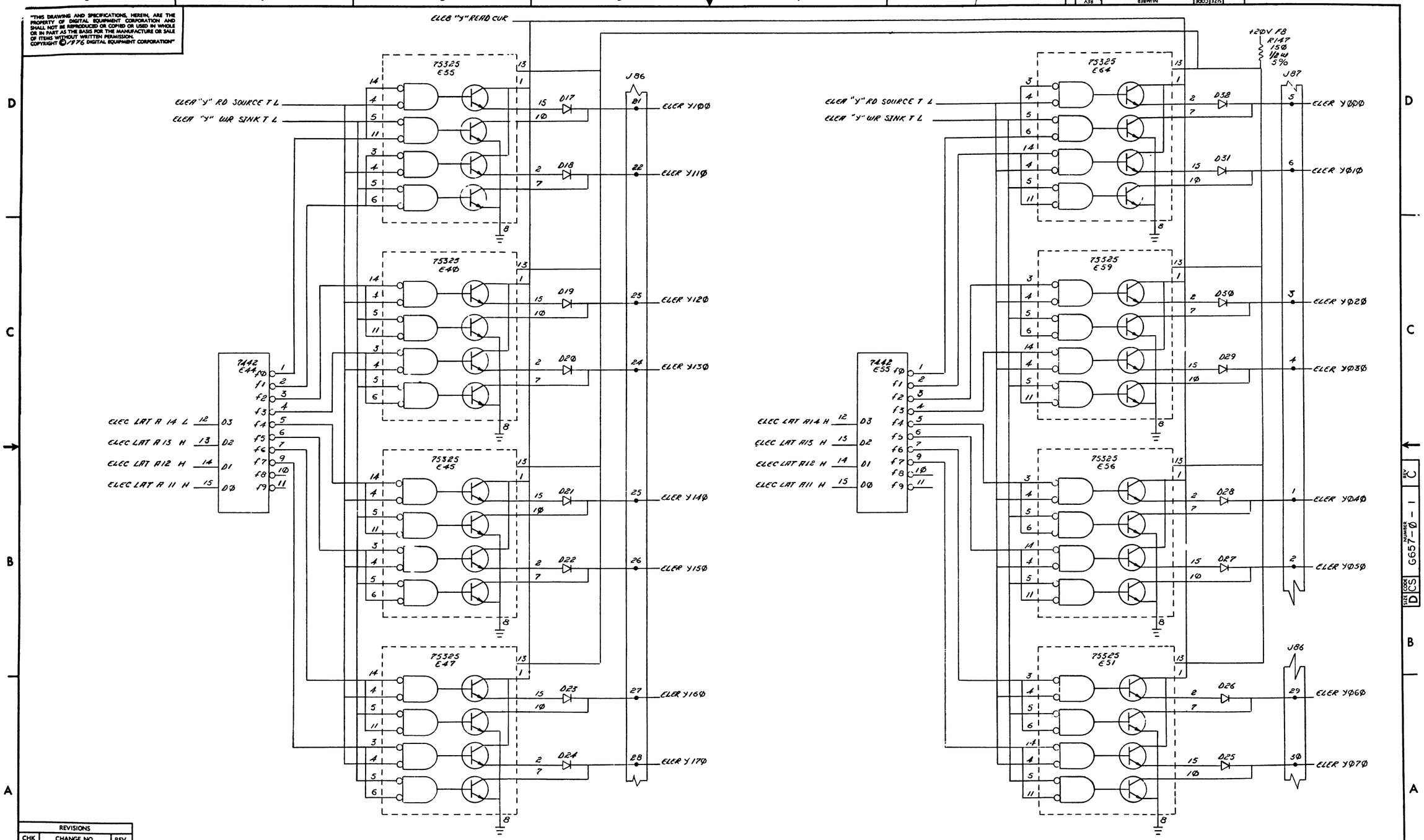

REVISIONS		
CHK	CHANGE NO	REV

TITLE	SIZE	CODE	NUMBER	REV.
32K SPC ELECTRONICS (ELER)	D	CS	G657-Ø-1	C
SCALE NON	SHEET 15 OF 18	DIST.		

DEC FORM NO. ORD 138

"THIS DRAWING AND SPECIFICATIONS, HEREIN, ARE THE PROPERTY OF DIGITAL EQUIPMENT CORPORATION AND SHALL NOT BE REPRODUCED OR COPIED OR USED IN WHOLE OR IN PART AS THE BASIS FOR THE MANUFACTURE OR SALE OF ITEMS WITHOUT WRITTEN PERMISSION
COPYRIGHT © 1976 DIGITAL EQUIPMENT CORPORATION"

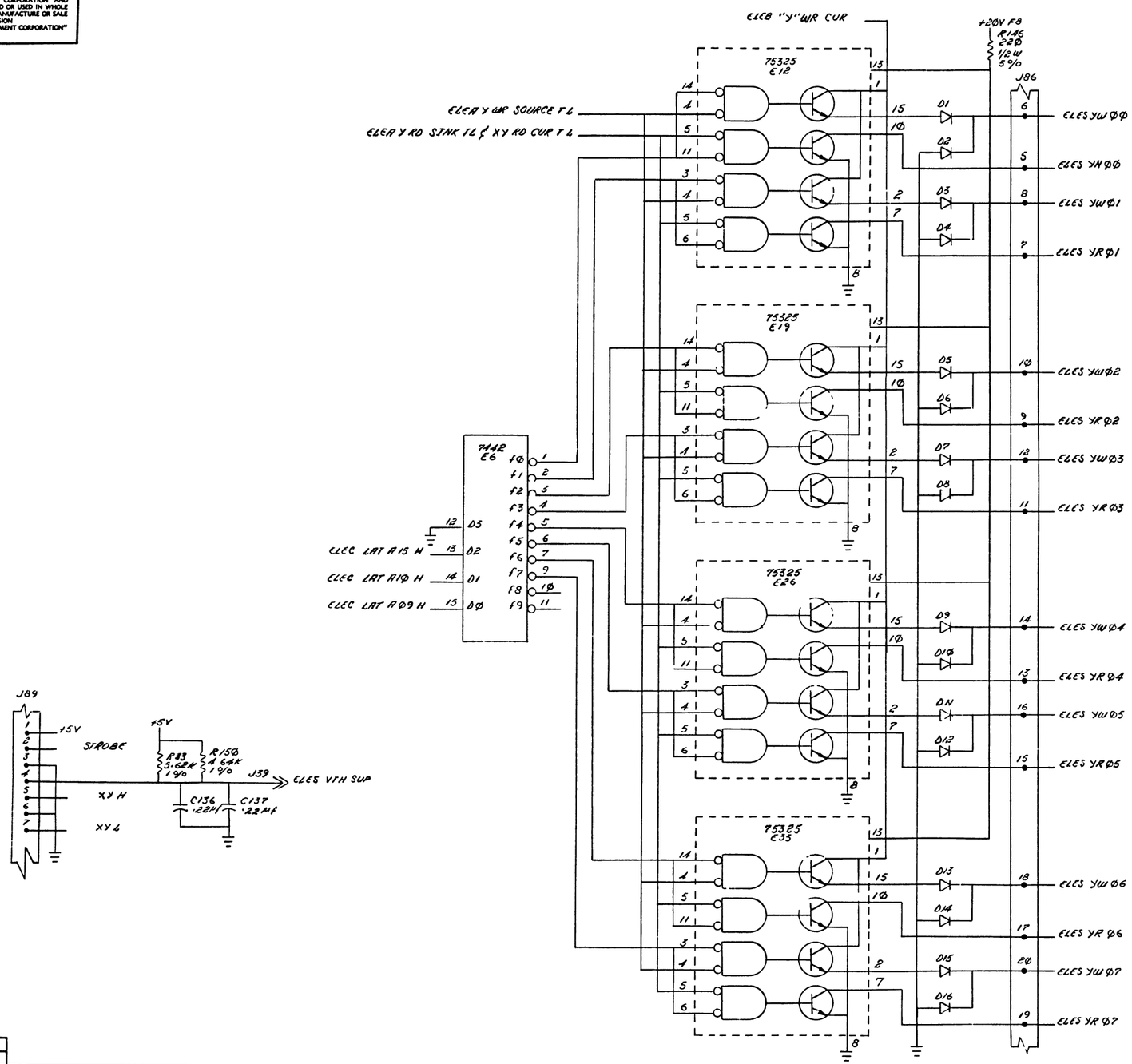

REVISIONS		
CHK	CHANGE NO	REV

TITLE	SIZE	CODE	NUMBER	REV.
32K SPC ELECTRONICS (ELES)	D	CS	G657-Ø-1	C
SCALE NONE	SHEET 16 OF 18	DIST.		

DEC FORM NO. DRD 138

"THIS DRAWING AND SPECIFICATIONS, HEREIN, ARE THE PROPERTY OF DIGITAL EQUIPMENT CORPORATION AND SHALL NOT BE REPRODUCED OR COPIED OR USED IN WHOLE OR IN PART AS THE BASIS FOR THE MANUFACTURE OR SALE OF ITEMS WITHOUT WRITTEN PERMISSION
COPYRIGHT © 1976 DIGITAL EQUIPMENT CORPORATION"

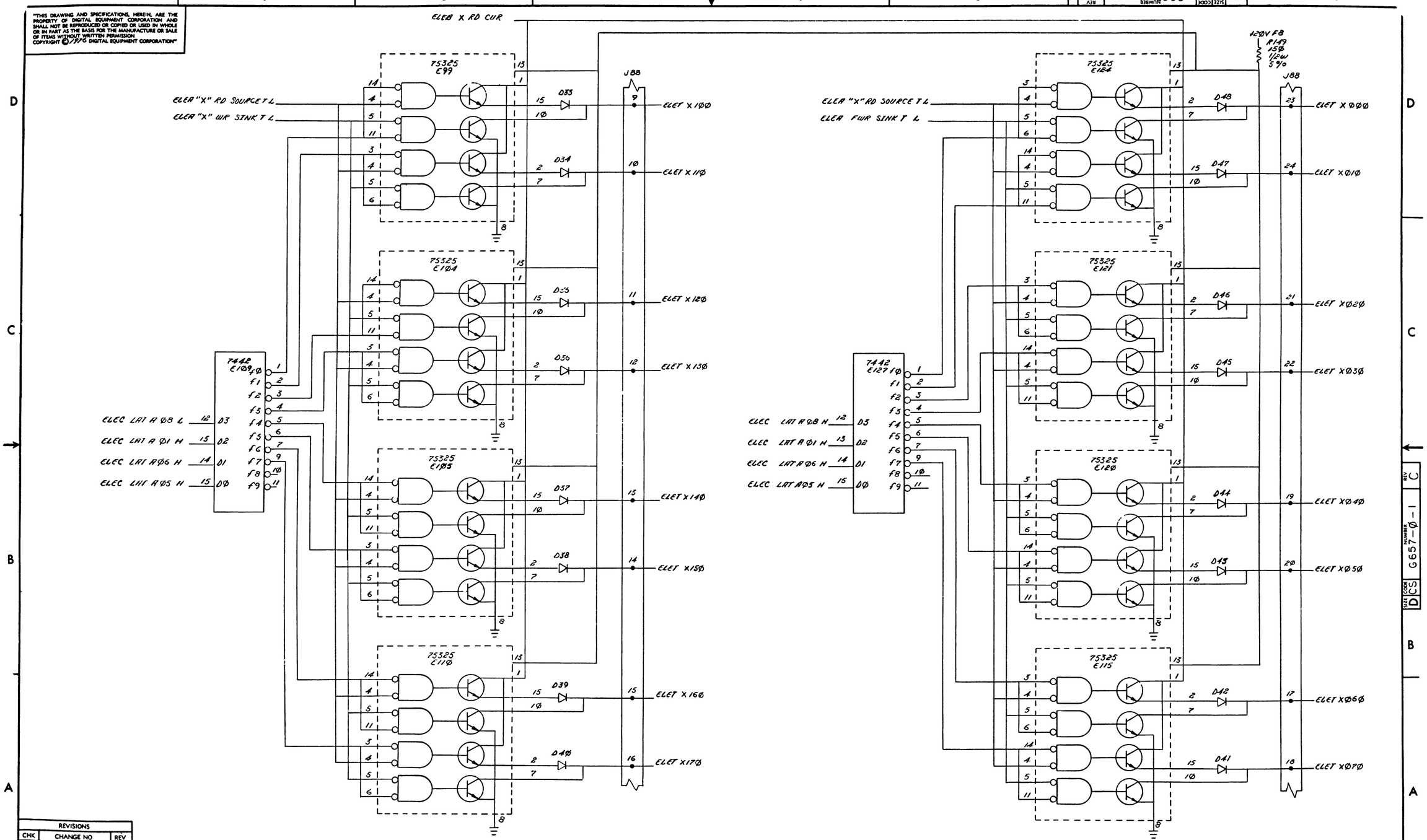

REVISIONS		
CHK	CHANGE NO	REV

TITLE	SIZE	CODE	NUMBER	REV.
32K SPC ELECTRONICS (ELET)	D	CS	G657-Ø-1	C
SCALE NONE	SHEET 17 OF 18	DIST.		

DEC FORM NO DRD 138

"THIS DRAWING AND SPECIFICATIONS, HEREIN, ARE THE PROPERTY OF DIGITAL EQUIPMENT CORPORATION AND SHALL NOT BE REPRODUCED OR COPIED OR USED IN WHOLE OR IN PART AS THE BASIS FOR THE MANUFACTURE OR SALE OF ITEMS WITHOUT WRITTEN PERMISSION.
COPYRIGHT © 1976 DIGITAL EQUIPMENT CORPORATION"

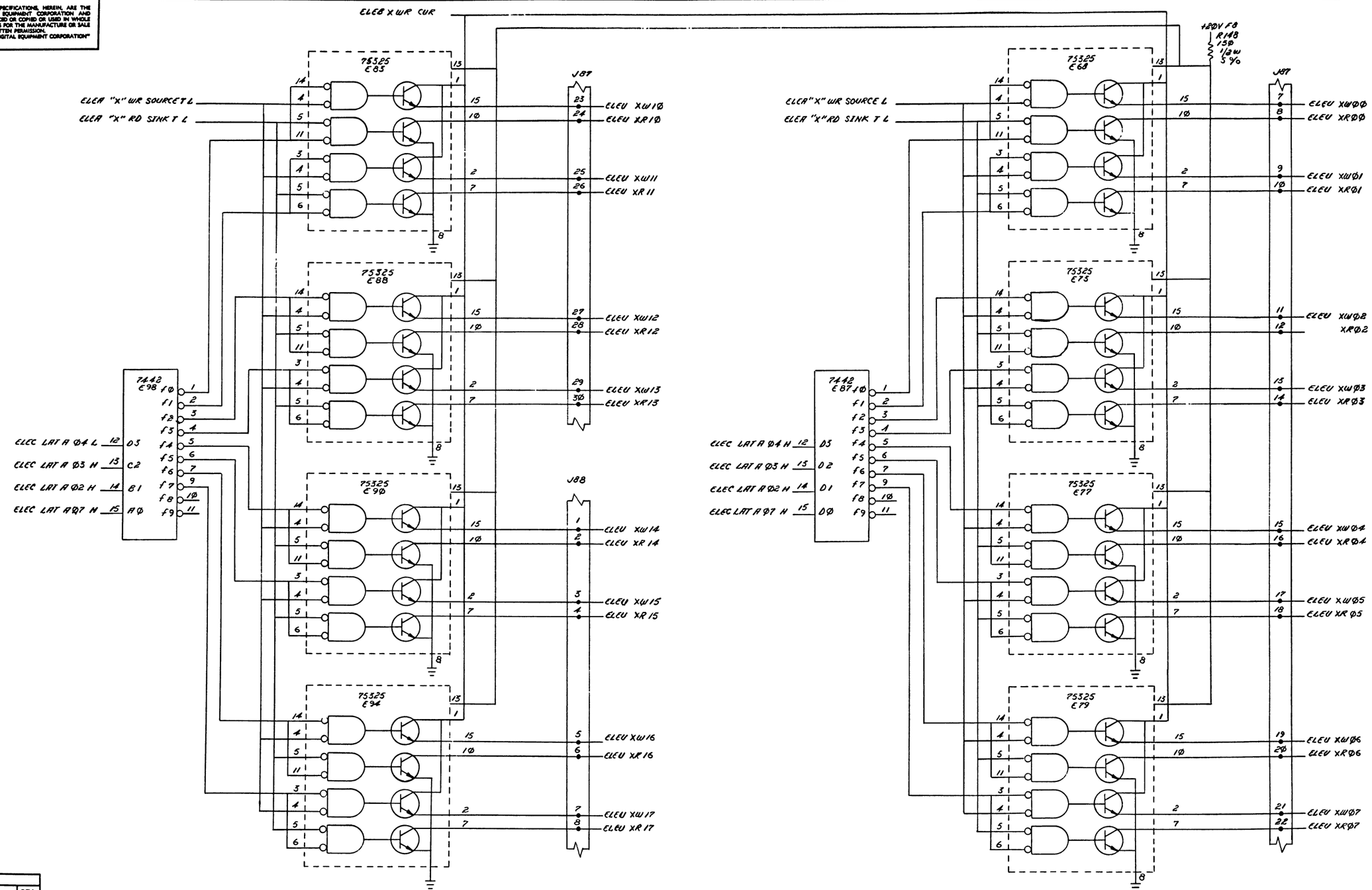

REVISIONS		
CHK	CHANGE NO	REV

TITLE	SIZE	CODE	NUMBER	REV.
32K SPC ELECTRONICS (ELEU)	D	CS	G657-Ø-1	C
SCALE NONE	SHEET 18 OF 18		DIST.	

DEC FORM NO. DRD 138

digital EQUIPMENT CORPORATION MAYNARD MASSACHUSETTS

DRAWING DIRECTORY

"THIS DRAWING AND SPECIFICATIONS, HEREIN, ARE THE PROPERTY OF DIGITAL EQUIPMENT CORPORATION AND SHALL NOT BE REPRODUCED OR COPIED OR USED IN WHOLE OR IN PART AS THE BASIS FOR THE MANUFACTURE OR SALE OF ITEMS WITHOUT WRITTEN PERMISSION. COPYRIGHT © 1975 , DIGITAL EQUIPMENT CORPORATION"

CUSTOMER PRINT SET INDEX

	SEQUENCE	SEQUENCE
DRAWING DIRECTORY (DD11-P)	B-DD-DD11-P	
BACK PLANE ASSY (DD11PK)	C-AD-7011523-0-0	
BACK PLANE ASSY (DD11PF)	C-AD-7012307-0-0	
MODULE UTILIZATION (DD11-P)	D-MU-DD11-P-2	
POWER HARNESS (BA11-K,BA11-L)	D-IA-7011108-0-0	
POWER HARNESS (BA11F,BA11-P)	D-IA-7011109-0-0	
CIRCUIT SCHEMATIC (DD11-P)	D-CS-5411660-0-1	
WIRE LIST (COMPLETE)	K-WL-DD11-P-1	

NOTE: DD11PK ASSEMBLIES ARE ELECTRICALLY INCOMPATIBLE WITH DD11PF ASSEMBLIES. A DD11PK WILL WORK IN BA11-L AND BA11-K BOXES ONLY. A DD11PF WILL WORK IN BA11-F AND BA11-P BOXES ONLY

THIS IS PRINT SET

UNIT VARIATIONS

VAR	TITLE	PRINT SET 1			
DD11-PK	BACK PLANE ASSY (BA11L, BA11K)	X			
DD11-PF	BACK PLANE ASSY (BA11F, BA11P)	X			

REVISIONS		
DATE	CHG. NO.	REV
2-76	DD11P-2	A
2-3-76	R. Barry	
9-76	DD11P-3	B
12-76	DD11P-4	C
2-77	DD11P-5	D

USED ON OPTION/MODEL

SHEET 1 OF 3

DRN. D. HEALY	DATE 6/19/75	TITLE DRAWING DIRECTORY DD11-P
CHK'D. D. Healy	DATE 6/30/75	
PROJ ENG. R Barry	DATE 7-2-75	
PROD. R Peterson	DATE 7/2/75	SIZE B · CODE DD · NUMBER DD11-P · REV D
FIELD SERV.	DATE 7-3-75	DIST

DEC 16-1325-1062-1A-R572

DRB 106

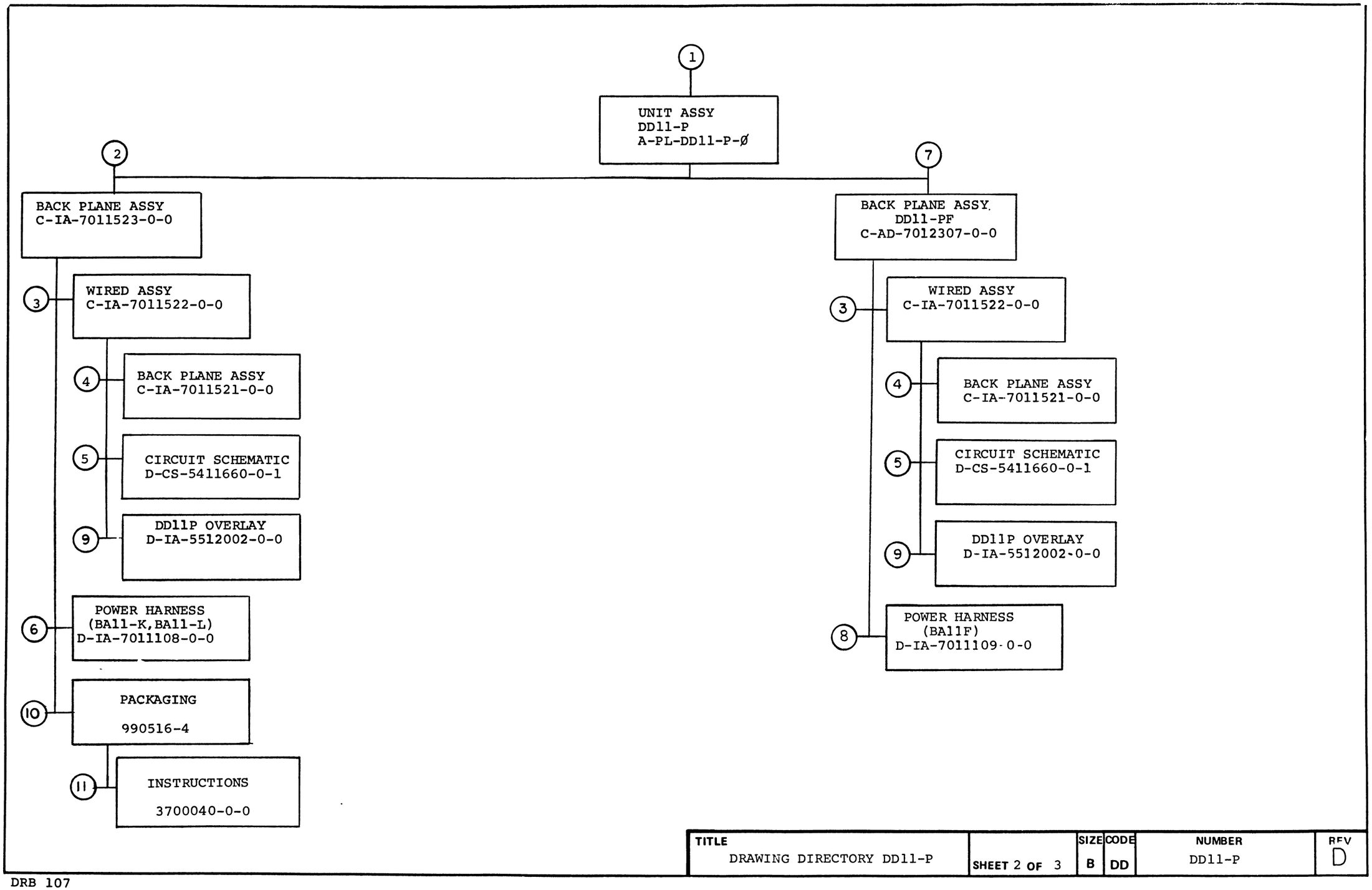

TITLE		SIZE	CODE	NUMBER	REV
DRAWING DIRECTORY DD11-P	SHEET 2 OF 3	B	DD	DD11-P	D

DRB 107

ELECTRICAL

CUSTOMER PRINT SET 1	MFG. SET	FIND NO.	DRAWING NO.	REV	NO OF SHT	DESCRIPTION	OPTION NO./FILE DATE
		1	A-PL-DD11-P-Ø		1	UNIT ASSY DD11-P	
X			D-MU-DD11-P-2		1	MODULE UTILIZATION	
X		2	C-IA-7011523-0-0		1	BACK PLANE ASSY DD11-PK	
		3	C-IA-7011522-0-0		1	WIRED ASSY	
X			K-WL-DD11-P-1	C	1	WIRE LIST	
			A-WT-7011522-0		1	AWT REV STATUS	
X		5	D-CS-5411660-0-1		1	CIRCUIT SCHEMATIC	
X		6	D-IA-7011108-0-0		1	POWER HARNESS (BA11-K,BA11-L)	
X		7	C-AD-7012307-0-0		1	BACK PLANE ASSY DD11-PF	
X		8	D-IA-7011109-0-0		1	POWER HARNESS(BA11-F,BA11-P)	

MECHANICAL

CUSTOMER PRINT SET 1	MFG SET	FIND NO.	DRAWING NO.	REV	NO OF SHT	DESCRIPTION	OPTION NO./FILE DATE
		1	A-PL-DD11-P-Ø		1	UNIT ASSY DD11-P	
		2	C-IA-7011523-0-0		1	BACK PLANE ASSY DD11-PK	
		3	C-IA-7011522-0-0		1	WIRED ASSY	
			B-DC-5308753-0-0		1	DECAL 21 POINT (LTR)	
			A-DC-7411881-0-0		1	LABEL, AWT REV STATUS	
		4	D-IA-7011521-0-0		1	BACK PLANE ASSY	
		5	D-CS-5411660-0-1			CIRCUTI SCHEMATIC	
			D-AH-5411660-0-4			ASSY/DRILLING HOLE LAYOUT	
			K-CO-5411660-0-5			X-Y COORDINATE HOLE LOCATION	
			B-MH-5411660-0-6			MODULE ECO HISTORY	
			5011659			ETCH CIRCUIT BOARD	
		6	D-IA-7011108-0-0		1	POWER HARNESS (BA11-K.BA11-L)	
		7	C-AD-7012307-0-0		1	BACKPLANE ASSY DD11-PF	
		8	D-IA-7011109-0-0		1	POWER HARNESS (BA11-F,BA11-P)	
		9	D-IA-5512002-0-0		1	OVERLAY, WIRING	
		10	990516			PACKAGING	
		11	3700040-0-0			PACKAGING INSTRUCTIONS	

CUSTOMER PRINT SET CODES
X = PRINT OF DOCUMENT INCLUDED IN PRINT SET
C = INCLUDES ALL PRINTS INDICATED ON DOCUMENT
S = CONFIDENTIAL AUTHORIZED SIGNATURE REQUIRED

TITLE	SHEET	SIZE	CODE	NUMBER	REV
DRAWING DIRECTORY DD11-P	3 OF 3	B	DD	DD11-P	D

DRB 108

D 'C 15 325)-1062-2B-R972

"THIS DRAWING AND SPECIFICATIONS, HEREIN, ARE THE PROPERTY OF DIGITAL EQUIPMENT CORPORATION AND SHALL NOT BE REPRODUCED OR COPIED OR USED IN WHOLE OR IN PART AS THE BASIS FOR THE MANUFACTURE OR SALE OF ITEMS WITHOUT WRITTEN PERMISSION. COPYRIGHT © 1975 DIGITAL EQUIPMENT CORPORATION"

WIRE TABLE

FROM COLOR	FROM POINT	FROM CONNECTION	TO SIGNAL	FROM COLOR	FROM POINT	FROM CONNECTION	TO SIGNAL
BLUE	P4-13	SOLDER	-15V	BRN	P2-14	SOLDER	-5V
RED	P4-4	↑	+5V	BLK	P2-8	↑	GND
RED	P4-1	↑	+5V	GRAY	P2-2	↑	+15
BLK	P4-8	↑	GND	ORG	P2-3	↑	+20
ORG	P4-3	↑	+20V	BLK	P2-9	↓	GND
BLK	P4-9	↑	GND	RED	P2-12	SOLDER	+5B
WHT	P4-6	↑	+15B	ITEM 5	ITEM 6	SOLDER	GND
GRN	P4-15	↑	-15B				
YEL	P3-4	↑	ACLO				
BLK	P3-1	↑	GND				
BRN	P3-2	↑	LTC				
VIO	P3-3	↑	DCLO				
RED	P2-4	↓	+5V				
RED	P2-1	SOLDER	+5V				

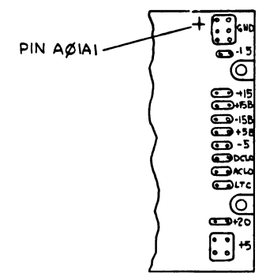

VIEW A

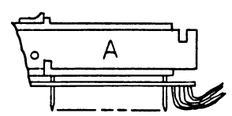

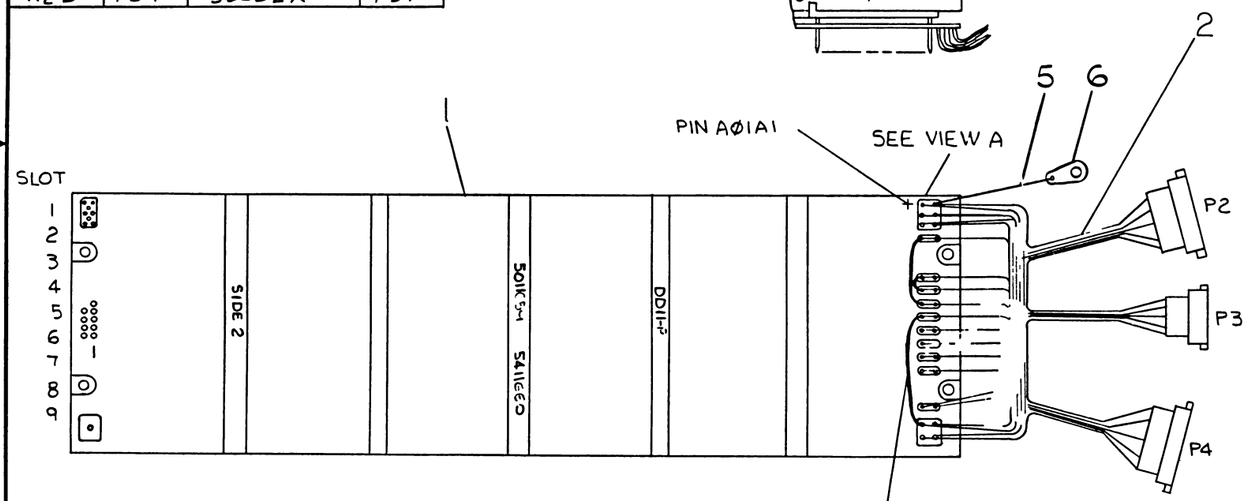

NOTES:

1. WHEN THE DD11-PK'S USED WITH A BA11-K EXPANSION BOX WITHOUT BATTERY BACK UP, (I.E., NO 765 OR 7850) INSTALL THE THREE JUMPERS SHOWN:
   A) -15 TO -15B
   B) +15 TO +15B
   C) +5 TO +5B (SEE NOTE 3)
   USE #22 SHIELD BUS WIRE ON SIDE 2. THIS WILL PROVIDE POWER TO THE MOS MEMORY VOLTAGE RAILS.
2. INSTALL ITEM #6 UNDER LOGIC FRAME MOUNTING SCREW TO TIE LOGIC GROUND TO CHASSIS GROUND.
3. BA11-K'S THAT USE THE 5410864-YA-1 POWER DISTRIBUTION (I.E., 11/34A, 11/34 WITH FP11-AU, AND SOME 11/04'S) AND HAVE MORE THAN ONE DD11-DK (OR AN ADDITIONAL DD11-CK) CAN ONLY HAVE THE +5 TO +5B JUMPER IN ONE OF THE BACK PANELS. IF TWO OF THE BACK PANELS HAVE THE JUMPER IN, THE +5V REGULATORS MAY BE CONNECTED TOGETHER. TYPICALLY THIS JUMPER IS IN THE FIRST BACK PANEL, BUT IT MAY BE PLACED IN ONE OF THE OTHER BACK PANELS IF DEEMED NECESSARY FOR POWER REQUIREMENTS.

PARTS LIST

QTY.	DESCRIPTION	PART NO.	ITEM NO.
A/R	COPRESS-O-CARTON	9905016-4	8
REF.	PACKAGING INSTRUCTIONS	3700040-0-0	7
1	TERMINAL, SOLDER	9008150	6
2"	WIRE, BLK, STRD #14	9107370-00	5
6"	TUBING #22 (BLUE)	9107256-06	4
6"	WIRE BUS #22	9107560-01	3
1	POWER HARNESS (BA11-K, BA11-L)	D-IA-7011108-0-0	2
1	WIRED ASSY DD11-P	C-IA-7011522-0-0	1

REV.	CHANGE NO.	CHK	
A	7011523-00001		E. Demers 13 Oct 75
B	DD11P-00002		R. BARRY 15 Oct 75
C	DD11-P-00005		G. Wade 24-FEB-76
D	7011523-00002		R. BARRY 8-March-76

FIRST USED ON OPTION/MODEL: DD11-P

DIMENSIONAL TOLERANCE
DIMENSIONS ARE ~~MILLIMETERS~~ INCHES UNLESS OTHERWISE SPECIFIED

MILLIMETERS	INCHES	ANGLES
X.XX = ±0.10	.XXX = ±.005	±0° 30'
X.X = ±0.5	.XX = ±.02	
X = ±2	.X = ±.1	

THIRD ANGLE PROJECTION

REMOVE BURRS AND BREAK SHARP CORNERS SURFACE QUALITY ✓

MATERIAL: SEE PARTS LIST

FINISH: —

DRN.		DATE 5/20/75
CHK'D		DATE 7/7/75
ENG.	R Barry	DATE 7-2-75
PROJ. ENG	R Barry	DATE 7-2-75
PROD.	R Peterson	DATE 7/8/75

NEXT HIGHER ASSY.: A-PL-DD11-P-0

SCALE: —

SHEET 1 OF 1

digital

TITLE: BACKPLANE ASS'Y (DD11-PK)

SIZE	CODE	NUMBER	REV.
C	IA	7011523-0-0	D

DIST.

DEC FORM NO DRC 100 B

"THIS DRAWING AND SPECIFICATIONS, HEREIN, ARE THE PROPERTY OF DIGITAL EQUIPMENT CORPORATION AND SHALL NOT BE REPRODUCED OR COPIED OR USED IN WHOLE OR IN PART AS THE BASIS FOR THE MANUFACTURE OR SALE OF ITEMS WITHOUT WRITTEN PERMISSION COPYRIGHT © 1975 DIGITAL EQUIPMENT CORPORATION"

WIRE TABLE

FROM COLOR	FROM POINT	FROM CONNECTION	TO SIGNAL	FROM COLOR	FROM POINT	FROM CONNECTION	TO SIGNAL
BLU	P4-13	SOLDER	-15V	BRN	P2-14	SOLDER	-5V
RED	P4-4	↓	+5V	BLK	P2-8	↓	GND
RED	P4-1		+5V	GRAY	P2-2		+15
BLK	P4-8		GND	ORN	P2-3		+20
ORN	P4-3		+20V	BLK	P2-9		GND
BLK	P4-9		GND	RED	P2-10	SOLDER	+5B
WHT	P4-6		+15B	ITEM#5	ITEM#6	SOLDER	GND
BRN	P4-15		-15B				
YEL	P3-4		ACLO				
BLK	P3-1		GND				
BRV	P3-2		LTC				
VIO	P3-3		DCLO				
RED	P2-4		+5V				
RED	P2-1	SOLDER	+5V				

NOTES:

1. WHEN DD11-PF IS USED WITH A BA11-F EXP BOX WITHOUT BATTERY BACK UP INSTALL THE THREE JUMPERS SHOWN:
   1) -15 TO -15B
   2) +15 TO +15B
   3) +5 TO +5B
   USE #20 INSULATED BUS WIRE ON SIDE 2 THIS WILL PROVIDE POWER TO THE MOS MEM VOLTAGE RAILS.
2. INSTALL ITEM #6 UNDER LOGIC FRAME MOUNTING SCREW TO TIE LOGIC GROUND TO CHASSIS GROUND.

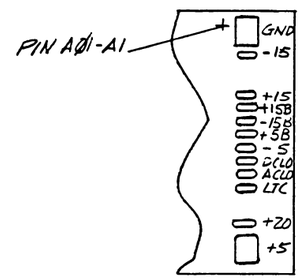

VIEW "A"

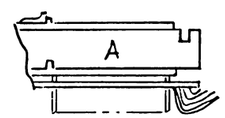

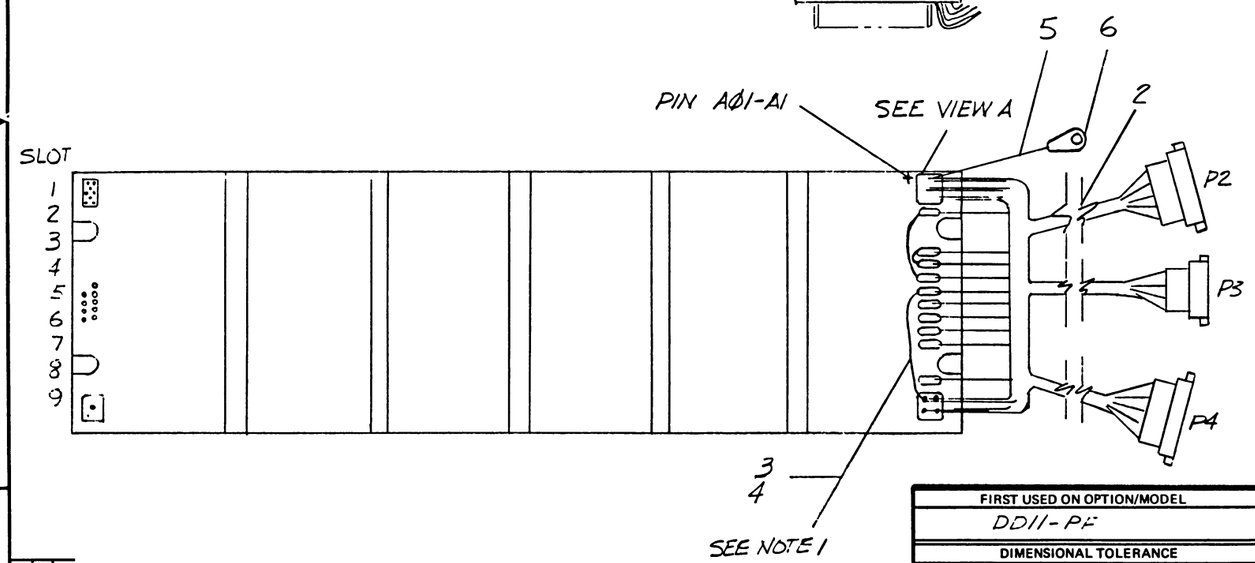

ITEM NO.	DESCRIPTION	PART NO.	QTY.
6	TERMINAL, SOLDER	9008150	1
5	WIRE, BLK STRD #14	9107370-00	T.L.
4	TUBING, #20 (CLEAR)	9107267-10	A/R
3	WIRE, BUS #20	9107560-02	A/R
2	POWER HARNESS BA11-F	D-TA-7011109-0-0	1
1	WIRED ASSY DD11-P	C-TA-7011522 D-0	1

PARTS LIST

FIRST USED ON OPTION/MODEL: DD11-PF

DIMENSIONAL TOLERANCE

DIMENSIONS ARE ~~MILLIMETERS~~ INCHES UNLESS OTHERWISE SPECIFIED

~~MILLIMETERS~~	INCHES	~~ANGLES~~
X,XX = ±0,10	~~.XXX = ±.005~~	±0° 30'
X,X = ±0,5	.XX = ±.02	
X = ±2,	.X = ±.1	

THIRD ANGLE PROJECTION

REMOVE BURRS AND BREAK SHARP CORNERS SURFACE QUALITY ✓

MATERIAL: SEE PARTS LIST

FINISH: —

		DATE
DRN.	[illegible]	12/18/75
CHK'D.	[illegible]	12/18/75
ENG.	R Barry	12/18/75
PROJ. ENG.	R Barry	12/18/75
PROD.	K G McQuoid	12-18-75

NEXT HIGHER ASSY.: A-PL-DD11-PF-Ø

SCALE: NONE

SHEET 1 OF 1

digital

TITLE: BACK PLANE ASSY (DD11-PF)

SIZE	CODE	NUMBER	REV.
C	AD	7012307-0-0	

DIST.

REVISIONS: REV. | CHANGE NO | CHK

DEC FORM NO DRC 111

"THIS DRAWING AND SPECIFICATIONS, HEREIN, ARE THE PROPERTY OF DIGITAL EQUIPMENT CORPORATION AND SHALL NOT BE REPRODUCED OR COPIED OR USED IN WHOLE OR IN PART AS THE BASIS FOR THE MANUFACTURE OR SALE OF ITEMS WITHOUT WRITTEN PERMISSION
COPYRIGHT ©1975, DIGITAL EQUIPMENT CORPORATION"

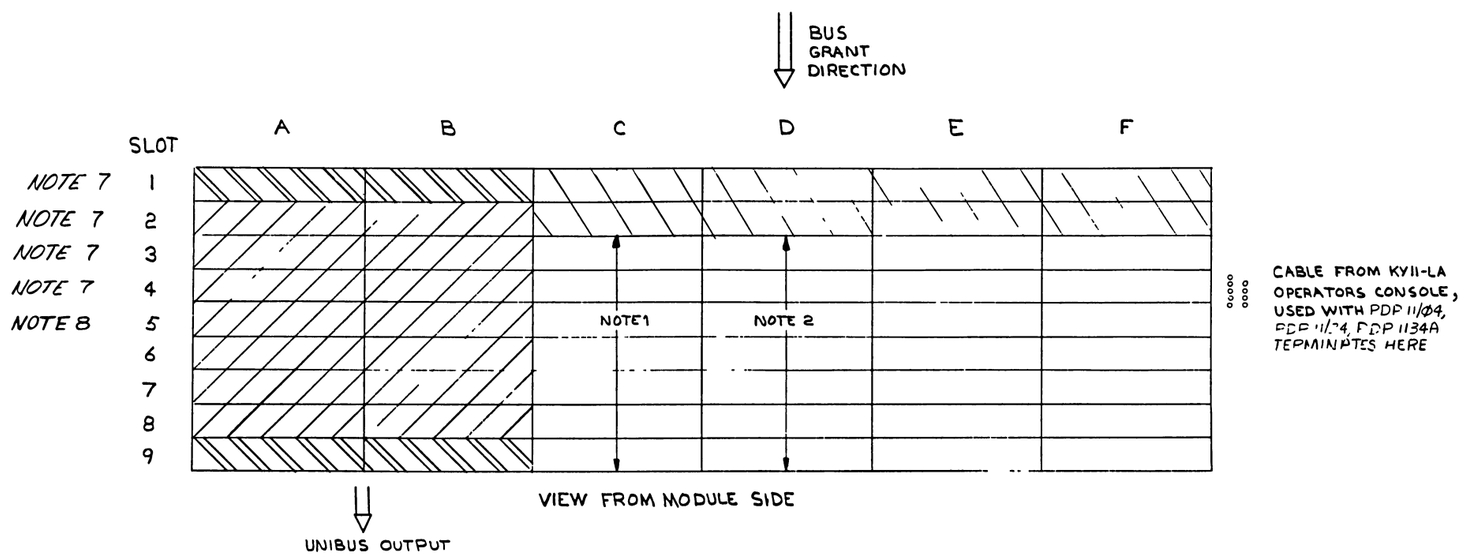

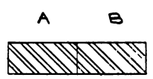

STANDARD UNIBUS
(SLOTS 1 & 9)
DUAL MODULES WHICH PLUG INTO STANDARD UNIBUS SLOTS **ONLY**:
BC11A UNIBUS CABLE
M9302 SACK/TERM (NOTE5)
M920 (NOTE4)
M930 (NOTE5)
M9202 (NOTE4)
SLOT 9 (A & B) IS EITHER THE TERMINATION OF THE UNIBUS OR THE OUTPUT CABLE (BC11A)

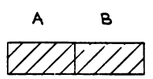

MODIFIED UNIBUS
(SLOTS 2-8)
DUAL MODULES WHICH PLUG INTO THE MODIFED UNIBUS **ONLY**:
M9312 BOOT/TERM.
M9306 TERM.
M7850 PARITY CONT.

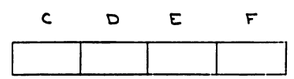

SMALL PERIPHERAL CONTROLLER
(SLOTS 3-9)
ANY S.P.C. OPTION

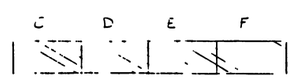

CPU BUS
(SLOTS 1 & 2)
PROCESSOR INTERCONNESS FOR KD11 & AND KD11-EH

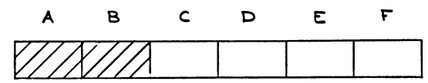

HEX MODULE WITH MODIFIED UNIBUS SIGNALS
(SLOTS 2-8)
HEX MODULES THAT PLUG INTO MODIFIED UNIBUS ONLY:
M7847 MOS MEMORY (MS11 EP-JP)
MM11-BP, CP, DP, OR YP CORE MEMORY

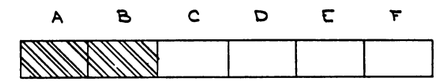

HEX MODULE WITH STANDARD UNIBUS SIGNALS
SLOT 1 ONLY
M7263 PDP11/04 CPU MODULE OR M7266 PDP 11/34 CONTROL MODULE
M7266 KD11-E (PDP 11/34) CONTROL MODULE
M8266 KD11-AE (PDP 11/34A) CONTROL MODULE

GENERAL
ANY HEX MODULE THAT MEETS EITHER OF THE FOLLOWING REQUIREMENTS CAN BE MOUNTED IN THESE SLOTS.
1.) THOSE PINNED TO TAKE SIGNALS FROM MODIFIED UNIBUS (A & B) WITH THE BUS GRANTS TAKEN FROM SPC SLOTS 1 & 9 ABOVE
2.) THOSE PINNED TO TAKE SIGNALS FROM STANDARD SPC PINNING WITH THE EXCEPTION OF POWER FROM (A & B). 1 & 9: SPECIAL OPTIONS

NOTES:

1. REMOVE CA1 TO CB1 WIRE WRAP JUMPER TO INSTALL AN NPR OPTION IN ANY SPC SLOT.
2. G727 REQUIRED IN ANY UNUSED SPC SLOT TO PROVIDE BUS GRANT CONTINUITY
3. GRANT DIRECTION IS SLOT 1 TO SLOT 9.
4. USE M9202 TO INTERCONNECT SYSTEM UNITS INSTEAD OF M920. M9202 IS A 2 FT. UNIBUS JUMPER CABLE USED TO DISTRIBUTE UNIBUS LOADING.
5. M9302 (SACK/TERM) AND M930 (TERM) MUST NEVER BE INSTALLED IN ANY SLOT OTHER THAN SLOT 9 (A & B). POWER SUPPLY VOLTAGES WILL BE SHORTED OUT IF THESE TERMINATORS ARE MOUNTED IN THE MODIFIED UNIBUS SLOTS.
6. MODIFIED UNIBUS SECTION CARRIES CORE AND MOS MEMORY VOLTAGE RAILS AND MEMORY PARITY CONTROL SIGNALS INSTEAD OF BUS GRANT AND SOME GND SIGNALS THAT ARE CONTAINED IN STANDARD UNIBUS SLOTS.
7. REFER TO NEXT PAGE FOR RECOMMENDED UTILIZATION OF THIS SLOT IN STANDARD SYSTEM.
8. THIS SLOT IS RESERVED FOR KK11-A OPTION ON PDP1134A ONLY BA11-K BOX ONLY.
9. SLOT 3 IS TO BE USED FOR EITHER KK11-A OR FP11-A OPTIONS. IF BOTH OPTIONS ARE PRESENT FP11-A MUST GO IN SLOT 3 AND KK11-A IN SLOT 5 THESE CONFIGURATIONS APPLY TO BOTH THE BA11-L (5 1/4") AND BA11-K (10.5") BOXES.
10. EITHER M9312 OR M9301 MAY BE USED BUT NOT BOTH.

REVISIONS			
CHK	CHANGE NO	REV	
	DD11-P-00005	A	6-FEB-71
	D. BARRY		
	DD11-P-00006	B	7-APR-72
	STEVE KITTLE		6-DEC-72
	J. SOFIO		12-OCT-72
	DD11-P-00007	C	
	J. Chaston		2-FEB-78
	J. SOFIO		
	DD11P-00008	D	
	J. Chaston		27-FEB-78
	J. SOFIO		

	DESCRIPTION	DWG/PART NO	ITEM NO
	UNLESS OTHERWISE SPECIFIED DIMENSIONS ARE IN INCHES		

ANGLES ±0° 30'	CLASS OF ACCURACY (CHECK ONE)	OVER 0 TO 0.2	OVER 0.2 TO 1.3	OVER 1.3 TO 4.0	OVER 4.0 TO 12.0	OVER 12.0 TO 40.0	OVER 40.0 TO 80.0
SURFACE QUALITY IN MICROINCHES		NOMINAL DIMENSION RANGE INCHES					
	MEDIUM ☐	±.004	±.008	±.012	±.016	±.024	±.04
	PREFERRED ☐	±.012	±.016	±.025	±.04	±.063	±0.1

QUANTITY & VARIATION

THIRD ANGLE PROJECTION

REMOVE BURRS AND BREAK SHARP CORNERS

DO NOT SCALE DWG

MATERIAL —

FINISH —

DRN D. Phillips 11/21/6
CHK'D Kwaty 7/1/72
ENG. R Barry 7-2-75
PROJ ENG R Barry 7-2-75
PROD R K Peterson 7/2/75

FIRST USED ON

digital

TITLE
MODULE UTILIZATION (DD11-D)

NEXT HIGHER ASSY
B-DD-DD11-.
SCALE —
SHEET 1 OF

SIZE	CODE	NUMBER	REV
D	MU	DD11-P-2	D

DIST

DEC FORM NO. DMU 100-C

"THIS DRAWING AND SPECIFICATIONS, HEREIN, ARE THE PROPERTY OF DIGITAL EQUIPMENT CORPORATION AND SHALL NOT BE REPRODUCED OR COPIED OR USED IN WHOLE OR IN PART AS THE BASIS FOR THE MANUFACTURE OR SALE OF ITEMS WITHOUT WRITTEN PERMISSION.
COPYRIGHT © DIGITAL EQUIPMENT CORPORATION"

RECOMMENDED SLOT UTILIZATION IN STANDARD SYSTEMS

KD11-D W/M9312 & MS11-JP(FP) — PDP-11/Ø4

SLOT 1	M7263	
2	MS11-JP (FP)	
3	M9312	
4		
5		
6		
7		
8		
SLOT 9		

KD11-E W/M9312 — PDP-11/34

SLOT 1	M7266	
2	M7265	
3	M9312	
4		
5		
6		
7		
8		
SLOT 9		

KD11-D W/M9312 & MM11-DP/OR MM11-YP — PDP-11/Ø4

SLOT 1	M7263	
2	MM11-DP	
3		
4	M9312	
5		
6		
7		
8		
SLOT 9		

KD11-EA W/M9312 FP11-A — PDP-1134A

SLOT 1	M8266			
2	M8265			
3	M8267			
4	M9312			
5				
6				
7				
8				
SLOT 9				

KD11-D W/M9312 & MM11-CP — PDP-11/Ø4

SLOT 1	M7263	
2	MM11-CP	
3	M9312	
4		
5		
6		
7		
8		
SLOT 9		

BA11-K 10.5" BOX/BA11-L 5.25"BOX
W/M9312 FP11-A KK11-A

KD11-EA — PDP1134 A

SLOT 1	M8266			
2	M8265			
SEE NOTE 9 → 3	M8267			
4	M9312			
5	M8268			
6				
7				
8				
SLOT 9				

KD11-EA W/M9312 — PDP-1134A

SLOT 1	M8266	
2	M8265	
3	M9312	
4		
5		
6		
7		
8		
SLOT 9		

BA11-K 10.5 BOX/BA11-L 5.25"BOX

KD11-EA W/M9312 KK11-A OR FP11-A — PDP1134 A

SLOT 1	M8266	
2	M8265	
SEE NOTE 9 → 3	M8267 OR M8268	
4	M9312	
5		
6		
7		
8		
SLOT 9		

REVISIONS		
CHK	CHANGE NO	REV

TITLE	SIZE	CODE	NUMBER	REV.
MODULE UTILIZATION (DDII-P)	D	MU	DDII-P-2	D
SCALE	SHEET 2 OF 2	DIST.		

"THIS DRAWING AND SPECIFICATIONS, HEREIN, ARE THE PROPERTY OF DIGITAL EQUIPMENT CORPORATION AND SHALL NOT BE REPRODUCED OR COPIED OR USED IN WHOLE OR IN PART AS THE BASIS FOR THE MANUFACTURE OR SALE OF ITEMS WITHOUT WRITTEN PERMISSION. COPYRIGHT © 1975, DIGITAL EQUIPMENT CORPORATION"

NOTES:

1. USE TIE WRAPS (X) ITEM #4 AT BREAKOUT POINTS SHOWN
2. DOT (•) INDICATES NAIL LOCATION FOR ASS'Y USE ONLY. COVER NAILS WITH SHRNK TUBING TO PREVENT CUTTING HARNESS.
3. WIRE LENGTH TOLERANCES WILL BE +1/8, -0 INCHES.
4. ALL CONN. SHOWN FROM WIRING SIDE.

WIRING TABLE

ITEM NO.	DESCRIPTION AWG	DESCRIPTION COLOR	FROM POINT	FROM CONNECTION	FROM WITH	TO POINT	TO CONNECTION	SIGNAL	LENGTH
9	#18	BLUE	1	P4-13	3	26	SOLDER	-15V	7
5	14	RED	2	P4-4		37		+5V	5
5	14	RED	3	P4-1		38		+5V	5
6	14	BLK	4	P4-8		21		GND	7.75
7	14	ORN	5	P4-3		35		+20V	5
6	14	BLK	6	P4-9		22		GND	8
13	18	WHT	7	P4-6		28		+15B	6.15
14	18	GRN	8	P4-15		29		-15B	6
12	18	YEL	9	P3-4		33		ACLO	4.25
6	14	BLK	10	P3-1		23		GND	6
10	18	BRN	11	P3-2		34		LTC	4.25
11	18	VIO	12	P3-3		32		DCLO	4.25
5	14	RED	13	P2-4		39		+5V	7.50
5	14	RED	14	P2-1		40		+5V	7.25
10	18	BRN	15	P2-14		31		-5V	5
6	14	BLK	16	P2-8		24		GND	5
8	18	GREY	17	P2-2		27		+15	4.75
7	14	ORN	18	P2-3		36		+20	6.75
6	14	BLK	19	P2-9		25		GND	5.15
5	14	RED	20	P2-12	3	30	SOLDER	+5B	5

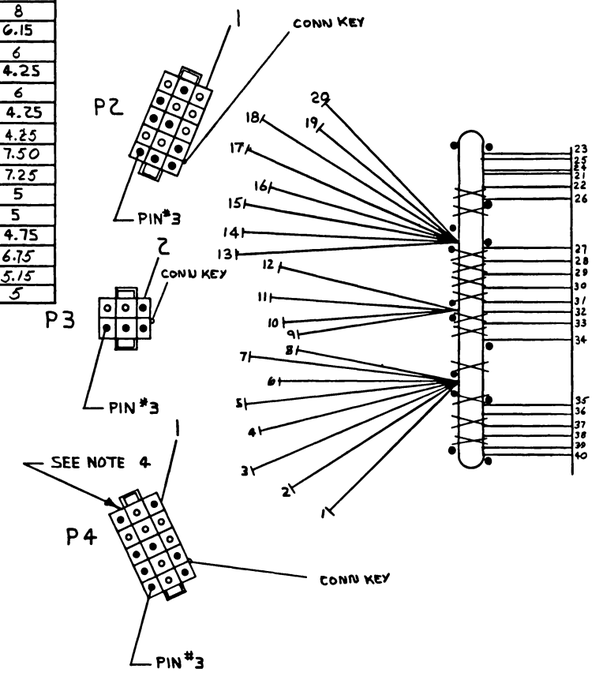

1	POWER HARNESS DECALS	7409872-2-0	15
A/R	WIRE #18 AWG, GRN	9107360-55	14
A/R	WIRE #18 AWG, WHT	9107360-99	13
A/R	WIRE #18 AWG, YEL	9107360-44	12
A/R	WIRE #18 AWG, VIO	9107360-77	11
A/R	WIRE #18 AWG, BRN	9107360-11	10
A/R	WIRE #18 AWG, BLUE	9107360-66	9
A/R	WIRE #18 AWG, GREY	9107360-88	8
A/R	WIRE #14 AWG, ORN	9107370-33	7
A/R	WIRE #14 AWG, BLK	9107370-00	6
A/R	WIRE #14 AWG, RED	9107370-22	5
12	TIE WRAP	9007031	4
20	PIN MALE	1209378-01	3
1	CONN. 6 PIN HOUSING	1209351-06	2
2	CONN 15 PIN HOUSING	1209351-15	1
	DESCRIPTION	DWG/PART NO.	ITEM NO.

FOR WIRE LENGTHS SEE WIRING TABLE

DO NOT REDUCE

SCALE

0 IN — 6 IN — 12 IN

FOR MANUFACTURING PURPOSES ONLY

UNLESS OTHERWISE SPECIFIED DIMENSIONS ARE IN INCHES

ANGLES ±0° 30'	CLASS OF ACCURACY (CHECK ONE)	OVER 0 TO 0.2	OVER 0.2 TO 1.3	OVER 1.3 TO 4.0	OVER 4.0 TO 12.0	OVER 12.0 TO 40.0	OVER 40.0 TO 80.0
SURFACE QUALITY IN MICROINCHES	MEDIUM	±.004	±.008	±.012	±.016	±.024	±.04
	PREFERRED	±.012	±.016	±.025	±.04	±.060	±0.1

QUANTITY & VARIATION

THIRD ANGLE PROJECTION

REMOVE BURRS AND BREAK SHARP CORNERS

DO NOT SCALE DWG

MATERIAL SEE PARTS LIST

FINISH —

DRN John Nagel 5/11/75
CHK'D D. Neagi 5/21/75
ENG R. Bangs
PROJ. ENG R. Bangs 5/28/75
PROD R.K. Ellis 6/12/75

FIRST USED ON DD11-D

digital

TITLE POWER HARNESS (BA11-K, BA11-L)

NEXT HIGHER ASSY. C-AD-7011164-0-0

SCALE 1/1

SHEET 1 OF 1

SIZE D CODE IA NUMBER 7011108-0-0 REV. B

DIST.

REVISIONS			
CHK	CHANGE NO.	REV.	
	7011108-00001	A	
	7011108-00002	B	

D. BARRY
P. FORRECA

DEC FORM NO. DRD 100-C

7011108-0-0 REV. B

"THIS DRAWING AND SPECIFICATIONS, HEREIN, ARE THE PROPERTY OF DIGITAL EQUIPMENT CORPORATION AND SHALL NOT BE REPRODUCED OR COPIED OR USED IN WHOLE OR IN PART AS THE BASIS FOR THE MANUFACTURE OR SALE OF ITEMS WITHOUT WRITTEN PERMISSION. COPYRIGHT © 1975 DIGITAL EQUIPMENT CORPORATION"

WIRING TABLE

ITEM NO	DESCRIPTION AWG	COLOR	FROM POINT	CONNECTION	WITH	TO POINT	CONNECTION	SIGNAL	LENGTH
9	18	BLU	1	P4-13	3	26	SOLDER	-15V	12.75
5	14	RED	2	P4-4	↑	37	↑	+5V	11
5	14	RED	3	P4-1		38		+5V	11.25
6	14	BLK	4	P4-8		21		GND	13.75
7	14	ORN	5	P4-3		35		+20V	11.0
6	14	BLK	6	P4-9		22		GND	13.25
13	18	WHT	7	P4-6		28		+15B	12.15
14	18	GRN	8	P4-15		29		-15B	11.6
12	18	YEL	9	P3-4		33		ACLO	10.25
6	14	BLK	10	P3-1		23		GND	12.1
10	18	BRN	11	P3-2		34		LTC	10.25
11	18	VIO	12	P3-3		32		DCLO	10.0
5	14	RED	13	P2-4		39		+5V	13.75
5	14	RED	14	P2-1		40		+5V	13.75
15	14	BRN	15	P2-14		31		-5V	11.0
6	14	BLK	16	P2-8		24		GND	11.0
8	18	GRY	17	P2-2		27		+15	10.75
7	14	ORN	18	P2-3		36		+20	13.0
6	14	BLK	19	P2-9		25		GND	11.0
5	14	RED	20	P2-10	3	30	SOLDER	+5B	10.50

NOTES:
1. USE TIE WRAPS (X) ITEM #4 AT BREAKOUT POINTS SHOWN.
2. DOT (•) INDICATES NAIL LOCATION FOR ASSY USE ONLY. COVER NAILS WITH SHRINK TUBING.
3. WIRE LENGTH TOL WILL BE ± .12 IN
4. ALL CONN SHOWN FROM WIRING SIDE.
5. STRIP 1/8" INSULATION FROM POINTS 21 THRU 40 AND FULL TIN POINTS 21 THRU 40.

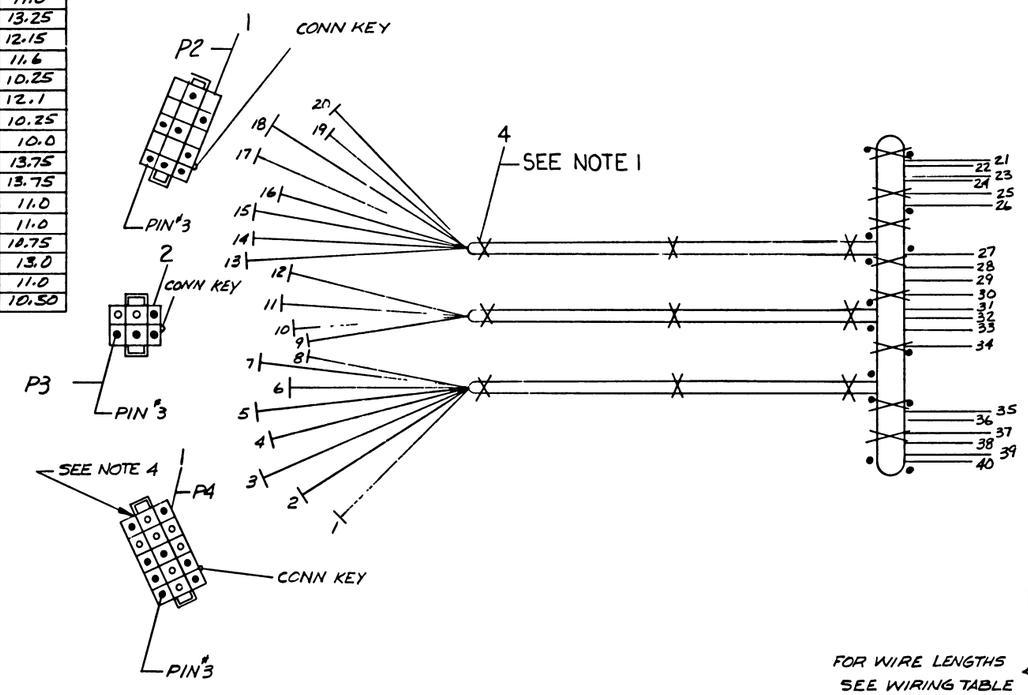

1	POWER HARNESS DECAL	7409872-2	16
A/R	WIRE #14 AWG (BRN)	9107370-11	15
A/R	WIRE #18 AWG, (GRN)	9107360-55	14
A/R	WIRE #18 AWG, (WHT)	9107360-99	13
A/R	WIRE #18 AWG (YEL)	9107360-44	12
A/R	WIRE #18 AWG, (VIO)	9107360-77	11
A/R	WIRE #18 AWG, (BRN)	9107360-11	10
A/R	WIRE #18 AWG, (BLU)	9107360-66	9
A/R	WIRE #18 AWG, (GRY)	9107360-88	8
A/R	WIRE #14 AWG, (ORN)	9107370-33	7
A/R	WIRE #14 AWG, (BLK)	9107370-00	6
A/R	WIRE #14 AWG, (RED)	9107370-22	5
17	TIE WRAP	9007031	4
20	PIN MALE	1209378-01	3
1	CONN 6 PIN HOUSING	1209351-06	2
2	CONN 15 PIN HOUSING	1209351-15	1
	DESCRIPTION	DWG/PART NO	ITEM NO

FOR WIRE LENGTHS SEE WIRING TABLE

DO NOT REDUCE

SCALE

0 IN — 6 IN — 12 IN

FOR MANUFACTURING PURPOSES ONLY

REV.	CHANGE NO.	CHK.
A	7011109-00001	K.T.
B	7011109-00002	

D. BARRY 15 FEB 77
P. PORRECA

QUANTITY & VARIATION

UNLESS OTHERWISE SPECIFIED DIMENSIONS ARE IN INCHES

ANGLES ±0° 30'	CLASS OF ACCURACY (CHECK ONE)	NOMINAL DIMENSION RANGE INCHES: OVER 0 TO 2.0	OVER 2.0 TO 12	OVER 12 TO 40	OVER 40 TO 120	OVER 120 TO 40.0	OVER 40.0 TO 80.0
SURFACE QUALITY IN MICROINCHES	MEDIUM	±.004	±.008	±.012	±.016	±.024	±.06
	PREFERRED	±.012	±.016	±.026	±.04	±.060	±0.1

THIRD ANGLE PROJECTION

REMOVE BURRS AND BREAK SHARP CORNERS

DO NOT SCALE DWG

MATERIAL: SEE PARTS LIST

FINISH: —"—

DRN		11/13/75
CHK'D		12/18/75
ENG	R. Barry	12/18/75
PROJ ENG	R. Barry	12/18/75
PROD		12/19/75

NEXT HIGHER ASSY.: CAD 7012307-0-0

SCALE: 1/1

SHEET 1 OF 1

FIRST USED ON: DD11-DF, PF

digital

TITLE: POWER HARNESS (BA11-F)

SIZE	CODE	NUMBER	REV.
D	IA	7011109-0-0	B

DIST.

DEC FORM NO. 2RD 300-C

* THIS DRAWING AND SPECIFICATIONS HEREIN ARE THE PROPERTY OF DIGITAL EQUIPMENT CORPORATION AND SHALL NOT BE REPRODUCED OR COPIED OR USED IN WHOLE OR IN PART AS THE BASIS FOR THE MANUFACTURE OR SALE OF ITEMS WITHOUT WRITTEN PERMISSION
COPYRIGHT © 1975 DIGITAL EQUIPMENT CORPORATION*

NOTES:

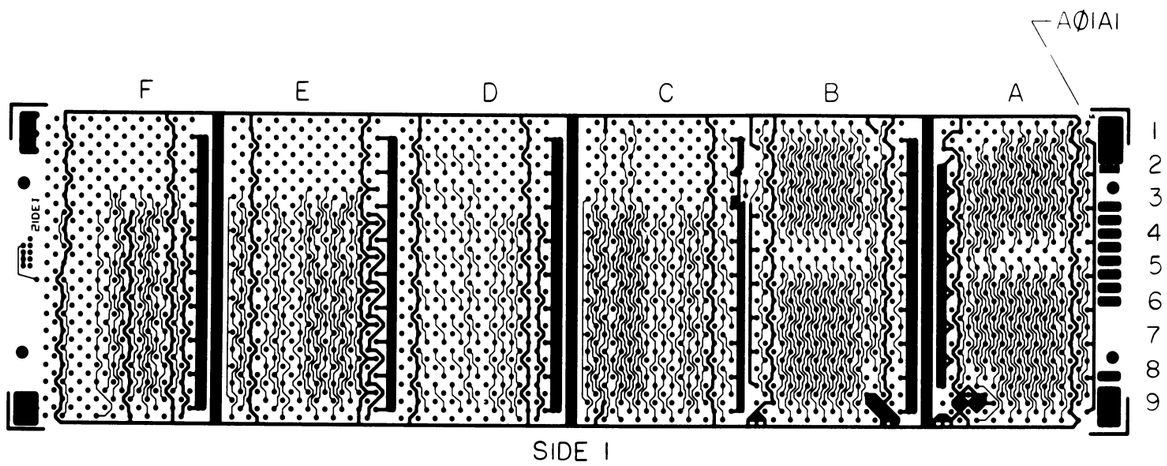

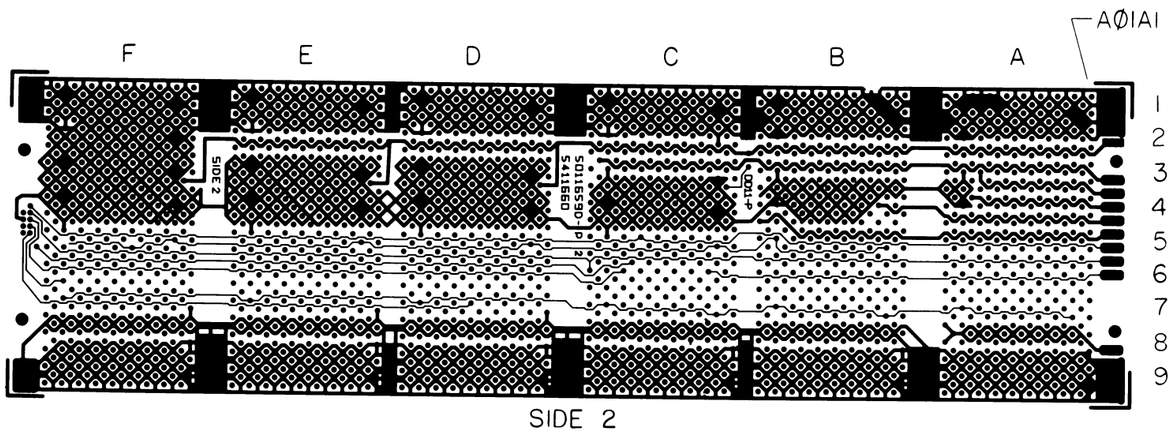

REF		AWT REV STATUS	A-WT-7011522-0	5
REF		MODULE ECO HISTORY	B-MH-5411660-0-6	4
REF		ASSY/DRILLING HOLE LAYOUT	D-AH-5411660-0-5	3
REF		X-Y COORDINATE HOLE LOCATION	K-CO-5411660-0-4	2
1		ETCHED CIRCUIT BOARD	5011659	1
QTY	REF. DESIGNATION	DESCRIPTION	PART NO	ITEM NO

PARTS LIST

FIRST USED ON OPTION MODEL

ETCH BOARD REV D

DEC NO.	EIA NO	DEC NO	EIA NO

SEMICONDUCTOR CONVERSION CHART

REV	CHANGE NO	CHK
E	5411660-00003	D BARRY 2-11-72
D	5411660 00002	R. BARRY 6-NOV-75
C	5411660-00001	R. BARRY 11-14-75

REVISIONS

IC TYPE	GND	+5V
GND AND 5V ARE USUALLY PIN 7 AND 14 RESPECTIVELY EXCEPTIONS ARE STATED ABOVE		

IC PIN LOCATIONS

DRN. B Bodgett DATE 6-20-75
CHK'D. DATE 7/1/75
ENG R Barry DATE 7-7-75
PROJ. ENG. R Barry DATE 7-7-75
PROD DATE

NEXT HIGHER ASSY C TA-7011521-0-0
SCALE 1/1
SHEET 1 OF 1

digital

TITLE CIRCUIT SCHEMATIC

SIZE	CODE	NUMBER	REV
D	CS	5411660-0-1	E

DIST.

DEC FORM NO DRD 135 B

This drawing and specifications, herein, are the property of Digital Equipment Corporation and shall not be reproduced or copied or used in whole or in part as the basis for the manufacture or sale of items without written permission. COPYRIGHT © 1975

DIGITAL EQUIP. CORP.

FIRST USED ON OPTION MODEL
DD11-P

QTY.	DESCRIPTION	PART NO.	ITEM NO.
	PARTS LIST		

DRN.		DATE 6/30/75
CHK'D		DATE 6/30/75
ENG.	R. Barry	DATE 7-2-75
PROJ. ENG.		DATE 7/2/75
PROD.		DATE 7/2/75
NEXT HIGHER ASSEMBLY	B-DD-DD11-P	
SCALE		
SHEET	1 OF 1	

digital EQUIPMENT CORPORATION
MAYNARD, MASSACHUSETTS

TITLE

WIRE LIST DD11-P

SIZE	CODE	NUMBER	REV.
K	WL	DD11-P-1	C

DIST.

REVISIONS

REV.	CHANGE NO.	CHK
A	DD11P-00001	RTB
B	DD11P-00003	RTB
C	DD11P-00004	RTB

DEC FORM NO. DRB 109

RUN NAME	A/P	PIN NAME	ORDER PIN	BAY - ORDER	Q	DRAW OPT	RV	RG	Y	X	Z	REMARKS	NC LENGTH FLAG	EXCEPTIONS	RUN NUMBER
+15/+8V		C03U1		1-01 *	P						2		0-7/8		1
+15/+8V		C04U1		1-02 *	P						1		0-7/8		1
+15/+8V		C05U1		1-03 *	P						2		0-7/8		1
+15/+8V		C06U1		1-04 *	P						1		0-7/8		1
+15/+8V		C07U1		1-05 *	P						2		0-7/8		1
+15/+8V		C08U1		1-06 *	P						1		0-7/8		1
+15/+8V		C09U1		1-07 *	P										1
+15/+8V				1									5-2/8		1
+20V		A02U1		1-01 *	P						1		0-2/8		2
+20V		A02V1		1-02 *	P						2		0-4/8		2
+20V		A02V2		1-03 *	P						1		0-2/8		2
+20V		A03U1		1-04 *	P						2		0-2/8		2
+20V		A03V1		1-05 *	P						1		0-4/8		2
+20V		A03V2		1-06 *	P						2		0-2/8		2
+20V		A04U1		1-07 *	P						1		0-2/8		2
+20V		A04V1		1-08 *	P						2		0-4/8		2
+20V		A04V2		1-09 *	P						1		0-2/8		2
+20V		A05U1		1-10 *	P						2		0-2/8		2
+20V		A05V1		1-11 *	P						1		0-4/8		2
+20V		A05V2		1-12 *	P						2		0-2/8		2
+20V		A06U1		1-13 *	P						1		0-2/8		2
+20V		A06V1		1-14 *	P						2		0-4/8		2
+20V		A06V2		1-15 *	P						1		0-2/8		2
+20V		A07U1		1-16 *	P						2		0-2/8		2
+20V		A07V1		1-17 *	P						1		0-4/8		2
+20V		A07V2		1-18 *	P						2		0-2/8		2
+20V		A08U1		1-19 *	P						1		0-2/8		2
+20V		A08V1		1-20 *	P						2		0-4/8		2
+20V		A08V2		1-21 *	P										2
+20V				1									6-6/8		2

RUN NAME	A/P	PIN NAME	ORDER PIN	BAY - ORDER	Q	DRAW OPT	RV	RG	Y	X	Z	REMARKS	NC LENGTH FLAG	EXCEPTIONS	RUN NUMBER
+5V		A01A2		1-01 *	P						2		0-7/8		3
+5V		A02A2		1-02 *	P						1		0-7/8		3
+5V		A03A2		1-03 *	P						2		0-7/8		3
+5V		A04A2		1-04 *	P						1		0-7/8		3
+5V		A05A2		1-05 *	P						2		0-7/8		3
+5V		A06A2		1-06 *	P						1		0-7/8		3
+5V		A07A2		1-07 *	P						2		0-7/8		3
+5V		A08A2		1-08 *	P						1		0-7/8		3
+5V		A09A2		1-09 *	P						2		3-1/8		3
+5V		B09A2		1-10 *	P						1		0-7/8		3
+5V		B08A2		1-11 *	P						2		0-7/8		3
+5V		B07A2		1-12 *	P						1		0-7/8		3
+5V		B06A2		1-13 *	P						2		0-7/8		3
+5V		B05A2		1-14 *	P						1		0-7/8		3
+5V		B04A2		1-15 *	P						2		0-7/8		3
+5V		B03A2		1-16 *	P						1		0-7/8		3
+5V		B02A2		1-17 *	P						2		0-7/8		3
+5V		B01A2		1-18 *	P						1		2-7/8		3
+5V		C01A2		1-19 *	P						2		0-7/8		3
+5V		C02A2		1-20 *	P						1		0-7/8		3
+5V		C03A2		1-21 *	P						2		0-7/8		3
+5V		C04A2		1-22 *	P						1		0-7/8		3
+5V		C05A2		1-23 *	P						2		0-7/8		3
+5V		C06A2		1-24 *	P						1		0-7/8		3
+5V		C07A2		1-25 *	P						2		0-7/8		3
+5V		C08A2		1-26 *	P						1		0-7/8		3
+5V		C09A2		1-27 *	P						2		3-1/8		3
+5V		D09A2		1-28 *	P						1		0-7/8		3
+5V		D08A2		1-29 *	P						2		0-7/8		3
+5V		D07A2		1-30 *	P						1		0-7/8		3
+5V		D06A2		1-31 *	P						2		0-7/8		3
+5V		D05A2		1-32 *	P						1		0-7/8		3
+5V		D04A2		1-33 *	P						2		0-7/8		3
+5V		D03A2		1-34 *	P						1		0-7/8		3
+5V		D02A2		1-35 *	P						2		0-7/8		3
+5V		D01A2		1-36 *	P						1		2-7/8		3
+5V		E01A2		1-37 *	P						2		0-7/8		3
+5V		E02A2		1-38 *	P						1		0-7/8		3
+5V		E03A2		1-39 *	P						2		0-7/8		3
+5V		E04A2		1-40 *	P						1		0-7/8		3
+5V		E05A2		1-41 *	P						2		0-7/8		3
+5V		E06A2		1-42 *	P						1		0-7/8		3
+5V		E07A2		1-43 *	P						2		0-7/8		3
+5V		E08A2		1-44 *	P						1		0-7/8		3
+5V		E09A2		1-45 *	P						2		3-1/8		3
+5V		F09A2		1-46 *	P						1		0-7/8		3
+5V		F08A2		1-47 *	P						2		0-7/8		3
+5V		F07A2		1-48 *	P						1		0-7/8		3
+5V		F06A2		1-49 *	P						2		0-7/8		3
+5V		F05A2		1-50 *	P						1		0-7/8		3
+5V		F04A2		1-51 *	P						2		0-7/8		3
+5V		F03A2		1-52 *	P						1		0-7/8		3
+5V		F02A2		1-53 *	P						2		0-7/8		3
+5V		F01A2		1-54 *	P										3
+5V				1									57-1/8		3

RUN NAME	A/P	PIN NAME	ORDER PIN	BAY = ORDER	Q	DRAW OPT	RV	RG	Y	X	Z	REMARKS	NC LENGTH FLAG	EXCEPTIONS	RUN NUMBER
=15V		C03B2		1=01 *	P						2		0=7/8		4
=15V		C04B2		1=02 *	P						1		0=7/8		4
=15V		C05B2		1=03 *	P						2		0=7/8		4
=15V		C06B2		1=04 *	P						1		0=7/8		4
=15V		C07B2		1=05 *	P						2		0=7/8		4
=15V		C08B2		1=06 *	P						1		0=7/8		4
=15V		C09B2		1=07 *	P						2		3=1/8		4
=15V		D09B2		1=08 *	P						1		0=7/8		4
=15V		D08B2		1=09 *	P						2		0=7/8		4
=15V		D07B2		1=10 *	P						1		0=7/8		4
=15V		D06B2		1=11 *	P						2		0=7/8		4
=15V		D05B2		1=12 *	P						1		0=7/8		4
=15V		D04B2		1=13 *	P						2		0=7/8		4
=15V		D03B2		1=14 *	P						1		2=7/8		4
=15V		E03B2		1=15 *	P						2		0=7/8		4
=15V		E04B2		1=16 *	P						1		0=7/8		4
=15V		E05B2		1=17 *	P						2		0=7/8		4
=15V		E06B2		1=18 *	P						1		0=7/8		4
=15V		E07B2		1=19 *	P						2		0=7/8		4
=15V		E08B2		1=20 *	P						1		0=7/8		4
=15V		E09B2		1=21 *	P						2		3=1/8		4
=15V		F09B2		1=22 *	P						1		0=7/8		4
=15V		F08B2		1=23 *	P						2		0=7/8		4
=15V		F07B2		1=24 *	P						1		0=7/8		4
=15V		F06B2		1=25 *	P						2		0=7/8		4
=15V		F05B2		1=26 *	P						1		0=7/8		4
=15V		F04B2		1=27 *	P						2		0=7/8		4
=15V		F03B2		1=28 *	P										4
=15V				1									30=1/8		4
=5V		B02V2		1=01 *	P						2		0=7/8		5
=5V		B03V2		1=02 *	P						1		0=7/8		5
=5V		B04V2		1=03 *	P						2		0=7/8		5
=5V		B05V2		1=04 *	P						1		0=7/8		5
=5V		B06V2		1=05 *	P						2		0=7/8		5
=5V		B07V2		1=06 *	P						1		0=7/8		5
=5V		B08V2		1=07 *	P										5
=5V				1									5=2/8		5
AC LO L		B01F1		1=01 *	P						1		0=7/8		6
AC LO L		B02F1		1=02 *	P						2		0=7/8		6
AC LO L		B03F1		1=03 *	P						1		0=7/8		6
AC LO L		B04F1		1=04 *							2		4=7/8		6
AC LO L		C03V1		1=05 *	P						1		0=7/8		6
AC LO L		C04V1		1=06 *	P						2		0=7/8		6
AC LO L		C05V1		1=07 *	P						1		0=7/8		6
AC LO L		C06V1		1=08 *	P						2		0=7/8		6
AC LO L		C07V1		1=09 *	P						1		0=7/8		6
AC LO L		C08V1		1=10 *	P						2		0=7/8		6
AC LO L		C09V1		1=11 *							1		6=3/8		6
AC LO L		B05F1		1=12 *	P						2		0=7/8		6
AC LO L		B06F1		1=13 *	P						1		0=7/8		6
AC LO L		B07F1		1=14 *	P						2		0=7/8		6
AC LO L		B08F1		1=15 *	P						1		0=7/8		6
AC LO L		B09F1		1=16 *	P										6
AC LO L				1									22=5/8		6

RUN NAME	A/P	PIN NAME	ORDER PIN	BAY - ORDER	Q	DRAW OPT	RV	RG	Y	X	Z	REMARKS	NC LENGTH FLAG	EXCEPTIONS	RUN NUMBER
BB+15		A02R1		1-01 *	P						2		0-7/8		7
BB+15		A03R1		1-02 *	P						1		0-7/8		7
BB+15		A04R1		1-03 *	P						2		0-7/8		7
BB+15		A05R1		1-04 *	P						1		0-7/8		7
BB+15		A06R1		1-05 *	P						2		0-7/8		7
BB+15		A07R1		1-06 *	P						1		0-7/8		7
BB+15		A08R1		1-07 *	P										7
BB+15				1									5-2/8		7
BB+5		B02D1		1-01 *	P						2		0-7/8		8
BB+5		B03D1		1-02 *	P						1		0-7/8		8
BB+5		B04D1		1-03 *	P						2		0-7/8		8
BB+5		B05D1		1-04 *	P						1		0-7/8		8
BB+5		B06D1		1-05 *	P						2		0-7/8		8
BB+5		B07D1		1-06 *	P						1		0-7/8		8
BB+5		B08D1		1-07 *	P										8
BB+5				1									5-2/8		8
BB-15		A02S1		1-01 *	P						2		0-7/8		9
BB-15		A03S1		1-02 *	P						1		0-7/8		9
BB-15		A04S1		1-03 *	P						2		0-7/8		9
BB-15		A05S1		1-04 *	P						1		0-7/8		9
BB-15		A06S1		1-05 *	P						2		0-7/8		9
BB-15		A07S1		1-06 *	P						1		0-7/8		9
BB-15		A08S1		1-07 *	P										9
BB-15				1									5-2/8		9
BBSY L		A01P2		1-01 *	P						2		0-7/8		10
BBSY L		A02P2		1-02 *	P						1		0-7/8		10
BBSY L		A03P2		1-03 *	P						2		0-7/8		10
BBSY L		A04P2		1-04 *	H						1	TWP	13-1/8		10
BBSY L		F03D1		1-05 *	P						2		0-7/8		10
BBSY L		F04D1		1-06 *	H						1	2" TWP	0-7/8		10
BBSY L		F05D1		1-07 *	P						2		0-7/8		10
BBSY L		F06D1		1-08 *	P						1		0-7/8		10
BBSY L		F07D1		1-09 *	P						2		0-7/8		10
BBSY L		F08D1		1-10 *	P						1		0-7/8		10
BBSY L		F09D1		1-11 *	H						2	TWP	14-3/8		10
BBSY L		A05P2		1-12 *	P						1		0-7/8		10
BBSY L		A06P2		1-13 *	P						2		0-7/8		10
BBSY L		A07P2		1-14 *	P						1		0-7/8		10
BBSY L		A08P2		1-15 *							2		0-7/8		10
BBSY L		A09P2		1-16 *											10
BBSY L				1									38-7/8		10
BG4 A		B01E2		1-01 *	H						1	TWP	6-7/8		11
BG4 A		D01S2		1-07 *											11
BG4 A				1									6-7/8		11
BG4 B		D01T2		1-01 *	P						1		0-5/8		12
BG4 B		D02S2		1-02 *	P										12
BG4 B				1									0-5/8		12

RUN NAME	A/P	PIN NAME	ORDER PIN	BAY - ORDER	Q	DRAW OPT	RV	RG	Y	X	Z	REMARKS	NC LENGTH FLAG	EXCEPTIONS	RUN NUMBER
BG4 C		D02T2		1-01 *	P						1		0-5/8		13
BG4 C		D03S2		1-02 *	P										13
BG4 C				1									0-5/8		13
BG4 D		D03T2		1-01 *	P						1		0-5/8		14
BG4 D		D04S2		1-02 *	P										14
BG4 D				1									0-5/8		14
BG4 E		D04T2		1-01 *	P						1		0-5/8		15
BG4 E		D05S2		1-02 *	P										15
BG4 E				1									0-5/8		15
BG4 F		D05T2		1-01 *	P						1		0-5/8		16
BG4 F		D06S2		1-02 *	P										16
BG4 F				1									0-5/8		16
BG4 H		D06T2		1-01 *	P						1		0-5/8		17
BG4 H		D07S2		1-02 *	P										17
BG4 H				1									0-5/8		17
BG4 J		D07T2		1-01 *	P						1		0-5/8		18
BG4 J		D08S2		1-02 *	P										18
BG4 J				1									0-5/8		18
BG4 K		D08T2		1-01 *	P						1		0-5/8		19
BG4 K		D09S2		1-02 *	P										19
BG4 K				1									0-5/8		19
BG4 L		B09E2		1-01 *	H						1	TWP	7-1/8		20
BG4 L		D09T2		1-02 *	X										20
BG4 L				1									7-1/8		20
BG5 A		B01B1		1-01 *	H						1	TWP	7-1/8		21
BG5 A		D01P2		1-02 *	X										21
BG5 A				1									7-1/8		21
BG5 B		D01R2		1-01 *	P						1		0-5/8		22
BG5 B		D02P2		1-02 *	P										22
BG5 B				1									0-5/8		22
BG5 C		D02R2		1-01 *	P						1		0-5/8		23
BG5 C		D03P2		1-02 *	P										23
BG5 C				1									0-5/8		23
BG5 D		D03R2		1-01 *	P						1		0-5/8		24
BG5 D		D04P2		1-02 *	P										24
BG5 D				1									0-5/8		24
BG5 E		D04R2		1-01 *	P						1		0-5/8		25
BG5 E		D05P2		1-02 *	P										25
BG5 E				1									0-5/8		25
BG5 F		D05R2		1-01 *	P						1		0-5/8		26
BG5 F		D06P2		1-02 *	P										26
BG5 F				1									0-5/8		26

RUN NAME	A/P	PIN NAME	ORDER PIN	BAY - ORDER	Q	DRAW OPT	RV	RG	Y	X	Z	REMARKS	NC FLAG	LENGTH	EXCEPTIONS	RUN NUMBER
BG5 H		D06R2		1-01 *	P						1			0-5/8		27
BG5 H		D07P2		1-02 *	P											27
BG5 H				1										0-5/8		27
BG5 J		D07R2		1-01 *	P						1			0-5/8		28
BG5 J		D08P2		1-02 *	P											28
BG5 J				1										0-5/8		28
BG5 K		D08R2		1-01 *	P						1			0-5/8		29
BG5 K		D09P2		1-02 *	P											29
BG5 K				1										0-5/8		29
BG5 L		B09B1		1-01 *	H						1	TWP		7-3/8		30
BG5 L		D09R2		1-02 *	X											30
BG5 L				1										7-3/8		30
BG6 A		B01A1		1-01 *	H						1	TWP		7-1/8		31
BG6 A		D01M2		1-02 *	X											31
BG6 A				1										7-1/8		31
BG6 B		D01N2		1-01 *	P						1			0-5/8		32
BG6 B		D02M2		1-02 *	P											32
BG6 B				1										0-5/8		32
BG6 C		D02N2		1-01 *	P						1			0-5/8		33
BG6 C		D03M2		1-02 *	P											33
BG6 C				1										0-5/8		33
BG6 D		D03N2		1-01 *	P						1			0-5/8		34
BG6 D		D04M2		1-02 *	P											34
BG6 D				1										0-5/8		34
BG6 E		D04N2		1-01 *	P						1			0-5/8		35
BG6 E		D05M2		1-02 *	P											35
BG6 E				1										0-5/8		35
BG6 F		D05N2		1-01 *	P						1			0-5/8		36
BG6 F		D06M2		1-02 *	P											36
BG6 F				1										0-5/8		36
BG6 H		D06N2		1-01 *	P						1			0-5/8		37
BG6 H		D07M2		1-02 *	P											37
BG6 H				1										0-5/8		37
BG6 J		D07N2		1-01 *	P						1			0-5/8		38
BG6 J		D08M2		1-02 *	P											38
BG6 J				1										0-5/8		38
BG6 K		D08N2		1-01 *	P						1			0-5/8		39
BG6 K		D09M2		1-02 *	P											39
BG6 K				1										0-5/8		39
BG6 L		B09A1		1-01 *	H						1	TWP		7-3/8		40
BG6 L		D09N2		1-02 *	X											40
BG6 L				1										7-3/8		40

RUN	NAME	A/P	PIN NAME	ORDER PIN	BAY - ORDER	Q	DRAW OPT	RV	RG	Y	X	Z	REMARKS	NC LENGTH FLAG	EXCEPTIONS	RUN NUMBER
BG7	A		A01V1		1-01 *	H						1	TWP	7-3/8		41
BG7	A		D01K2		1-02 *	X										41
BG7	A				1									7-3/8		41
BG7	B		D01L2		1-01 *	P						1		0-5/8		42
BG7	B		D02K2		1-02 *	P										42
BG7	B				1									0-5/8		42
BG7	C		D02L2		1-01 *	P						1		0-5/8		43
BG7	C		D03K2		1-02 *	P										43
BG7	C				1									0-5/8		43
BG7	D		D03L2		1-01 *	P						1		0-5/8		44
BG7	D		D04K2		1-02 *	P										44
BG7	D				1									0-5/8		44
BG7	E		D04L2		1-01 *	P						1		0-5/8		45
BG7	E		D05K2		1-02 *	P										45
BG7	E				1									0-5/8		45
BG7	F		D05L2		1-01 *	P						1		0-5/8		46
BG7	F		D06K2		1-02 *	P										46
BG7	F				1									0-5/8		46
BG7	H		D06L2		1-01 *	P						1		0-5/8		47
BG7	H		D07K2		1-02 *	X										47
BG7	H				1									0-5/8		47
BG7	J		D07L2		1-01 *	P						1		0-5/8		48
BG7	J		D08K2		1-02 *	P										48
BG7	J				1									0-5/8		48
BG7	K		D08L2		1-01 *	P						1		0-5/8		49
BG7	K		D09K2		1-02 *	P										49
BG7	K				1									0-5/8		49
BG7	L		A09V1		1-01 *	H						1	TWP	7-5/8		50
BG7	L		D09L2		1-02 *	X										50
BG7	L				1									7-5/8		50

RUN NAME	A/P	PIN NAME	ORDER PIN	BAY - ORDER	Q	DRAW OPT	RV	RG	Y	X	Z	REMARKS	NC LENGTH FLAG	EXCEPTIONS	RUN NUMBER
BR4 L		B01D2		1-01 *							2		0-7/8		51
BR4 L		B02D2		1-02 *							1		0-7/8		51
BR4 L		B03D2		1-03 *							2		0-7/8		51
BR4 L		B04D2		1-04 *							1		6-5/8		51
BR4 L		D03H2		1-05 *	P						2		0-7/8		51
BR4 L		D04H2		1-06 *	P						1		0-7/8		51
BR4 L		D05H2		1-07 *	P						2		0-7/8		51
BR4 L		D06H2		1-08 *	P						1		0-7/8		51
BR4 L		D07H2		1-09 *	P						2		0-7/8		51
BR4 L		D08H2		1-10 *	P						1		0-7/8		51
BR4 L		D09H2		1-11 *							2		7-7/8		51
BR4 L		B05D2		1-12 *							1		0-7/8		51
BR4 L		B06D2		1-13 *							2		0-7/8		51
BR4 L		B07D2		1-14 *							1		0-7/8		51
BR4 L		B08D2		1-15 *							2		0-7/8		51
BR4 L		B09D2		1-16 *											51
BR4 L				1									25-7/8		51
BR5 L		B01C1		1-01 *	P						1		0-7/8		52
BR5 L		B02C1		1-02 *	P						2		0-7/8		52
BR5 L		B03C1		1-03 *	P						1		0-7/8		52
BR5 L		B04C1		1-04 *							2		6-1/8		52
BR5 L		D03F2		1-05 *	P						1		0-7/8		52
BR5 L		D04F2		1-06 *	P						2		0-7/8		52
BR5 L		D05F2		1-07 *	P						1		0-7/8		52
BR5 L		D06F2		1-08 *	P						2		0-7/8		52
BR5 L		D07F2		1-09 *	P						1		0-7/8		52
BR5 L		D08F2		1-10 *	P						2		0-7/8		52
BR5 L		D09F2		1-11 *							1		8-3/8		52
BR5 L		B05C1		1-12 *	P						2		0-7/8		52
BR5 L		B06C1		1-13 *	P						1		0-7/8		52
BR5 L		B07C1		1-14 *	P						2		0-7/8		52
BR5 L		B08C1		1-15 *	P						1		0-7/8		52
BR5 L		B09C1		1-16 *	P										52
BR5 L				1									25-7/8		52
BR6 L		A01U2		1-01 *							2		0-7/8		53
BR6 L		A02U2		1-02 *							1		0-7/8		53
BR6 L		A03U2		1-03 *							2		0-7/8		53
BR6 L		A04U2		1-04 *							1		7-3/8		53
BR6 L		D03E2		1-05 *	P						2		0-7/8		53
BR6 L		D04E2		1-06 *	P						1		0-7/8		53
BR6 L		D05E2		1-07 *	P						2		0-7/8		53
BR6 L		D06E2		1-08 *	P						1		0-7/8		53
BR6 L		D07E2		1-09 *	P						2		0-7/8		53
BR6 L		D08E2		1-10 *	P						1		0-7/8		53
BR6 L		D09E2		1-11 *							2		8-7/8		53
BR6 L		A05U2		1-12 *							1		0-7/8		53
BR6 L		A06U2		1-13 *							2		0-7/8		53
BR6 L		A07U2		1-14 *							1		0-7/8		53
BR6 L		A08U2		1-15 *							2		0-7/8		53
BR6 L		A09U2		1-16 *											53
BR6 L				1									27-5/8		53

RUN NAME	A/P	PIN NAME	ORDER PIN	BAY - ORDER	Q	DRAW OPT	RV	RG	Y	X	Z	REMARKS	NC LENGTH FLAG	EXCEPTIONS	RUN NUMBER
BR7 L		A01T2		1-01 *	P						2		0-7/8		54
BR7 L		A02T2		1-02 *	P						1		0-7/8		54
BR7 L		A03T2		1-03 *	P						2		0-7/8		54
BR7 L		A04T2		1-04 *							1		7-3/8		54
BR7 L		D03D2		1-05 *	P						2		0-7/8		54
BR7 L		D04D2		1-06 *	P						1		0-7/8		54
BR7 L		D05D2		1-07 *	P						2		0-7/8		54
BR7 L		D06D2		1-08 *	P						1		0-7/8		54
BR7 L		D07D2		1-09 *	P						2		0-7/8		54
BR7 L		D08D2		1-10 *	P						1		0-7/8		54
BR7 L		D09D2		1-11 *							2		8-7/8		54
BR7 L		A05T2		1-12 *	P						1		0-7/8		54
BR7 L		A06T2		1-13 *	P						2		0-7/8		54
BR7 L		A07T2		1-14 *	P						1		0-7/8		54
BR7 L		A08T2		1-15 *							2		0-7/8		54
BR7 L		A09T2		1-16 *											54
BR7 L				1									27-5/8		54
BUS A00 L		B01H2		1-01 *	P						2		0-7/8		55
BUS A00 L		B02H2		1-02 *	P						1		0-7/8		55
BUS A00 L		B03H2		1-03 *	P						2		0-7/8		55
BUS A00 L		B04H2		1-04 *							1		8-5/8		55
BUS A00 L		E03H2		1-05 *							2		0-7/8		55
BUS A00 L		E04H2		1-06 *							1		0-7/8		55
BUS A00 L		E05H2		1-07 *							2		0-7/8		55
BUS A00 L		E06H2		1-08 *							1		0-7/8		55
BUS A00 L		E07H2		1-09 *							2		0-7/8		55
BUS A00 L		E08H2		1-10 *							1		0-7/8		55
BUS A00 L		E09H2		1-11 *							2		10-1/8		55
BUS A00 L		B05H2		1-12 *	P						1		0-7/8		55
BUS A00 L		B06H2		1-13 *	P						2		0-7/8		55
BUS A00 L		B07H2		1-14 *	P						1		0-7/8		55
BUS A00 L		B08H2		1-15 *	P						2		0-7/8		55
BUS A00 L		B09H2		1-16 *	P										55
BUS A00 L				1									30-1/8		55
BUS A01 L		B01H1		1-01 *	P						2		0-7/8		56
BUS A01 L		B02H1		1-02 *	P						1		0-7/8		56
BUS A01 L		B03H1		1-03 *	P						2		0-7/8		56
BUS A01 L		B04H1		1-04 *							1		8-5/8		56
BUS A01 L		E03H1		1-05 *	P						2		0-7/8		56
BUS A01 L		E04H1		1-06 *	P						1		0-7/8		56
BUS A01 L		E05H1		1-07 *	P						2		0-7/8		56
BUS A01 L		E06H1		1-08 *	P						1		0-7/8		56
BUS A01 L		E07H1		1-09 *	P						2		0-7/8		56
BUS A01 L		E08H1		1-10 *	P						1		0-7/8		56
BUS A01 L		E09H1		1-11 *							2		10-1/8		56
BUS A01 L		B05H1		1-12 *	P						1		0-7/8		56
BUS A01 L		B06H1		1-13 *	P						2		0-7/8		56
BUS A01 L		B07H1		1-14 *	P						1		0-7/8		56
BUS A01 L		B08H1		1-15 *	P						2		0-7/8		56
BUS A01 L		B09H1		1-16 *	P										56
BUS A01 L				1									30-1/8		56

RUN NAME	A/P	PIN NAME	ORDER PIN	BAY - ORDER	Q	DRAW OPT	RV	RG	Y	X	Z	REMARKS	NC LENGTH FLAG	EXCEPTIONS	RUN NUMBER
BUS A02 L		B01J2		1-01 *	P						2		0-7/8		57
BUS A02 L		B02J2		1-02 *	P						1		0-7/8		57
BUS A02 L		B03J2		1-03 *	P						2		0-7/8		57
BUS A02 L		B04J2		1-04 *							1		8-5/8		57
BUS A02 L		E03F1		1-05 *	P						2		0-7/8		57
BUS A02 L		E04F1		1-06 *	P						1		0-7/8		57
BUS A02 L		E05F1		1-07 *	P						2		0-7/8		57
BUS A02 L		E06F1		1-08 *	P						1		0-7/8		57
BUS A02 L		E07F1		1-09 *	P						2		0-7/8		57
BUS A02 L		E08F1		1-10 *	P						1		0-7/8		57
BUS A02 L		E09F1		1-11 *							2		9-5/8		57
BUS A02 L		B05J2		1-12 *	P						1		0-7/8		57
BUS A02 L		B06J2		1-13 *	P						2		0-7/8		57
BUS A02 L		B07J2		1-14 *	P						1		0-7/8		57
BUS A02 L		B08J2		1-15 *	P						2		0-7/8		57
BUS A02 L		B09J2		1-16 *	P										57
BUS A02 L				1									29-5/8		57
BUS A03 L		B01J1		1-01 *	P						1		0-7/8		58
BUS A03 L		B02J1		1-02 *	P						2		0-7/8		58
BUS A03 L		B03J1		1-03 *	P						1		0-7/8		58
BUS A03 L		B04J1		1-04 *							2		9-5/8		58
BUS A03 L		E03V2		1-05 *	P						1		0-7/8		58
BUS A03 L		E04V2		1-06 *	P						2		0-7/8		58
BUS A03 L		E05V2		1-07 *	P						1		0-7/8		58
BUS A03 L		E06V2		1-08 *	P						2		0-7/8		58
BUS A03 L		E07V2		1-09 *	P						1		0-7/8		58
BUS A03 L		E08V2		1-10 *	P						2		0-7/8		58
BUS A03 L		E09V2		1-11 *							1		11-5/8		58
BUS A03 L		B05J1		1-12 *	P						2		0-7/8		58
BUS A03 L		B06J1		1-13 *	P						1		0-7/8		58
BUS A03 L		B07J1		1-14 *	P						2		0-7/8		58
BUS A03 L		B08J1		1-15 *	P						1		0-7/8		58
BUS A03 L		B09J1		1-16 *	P										58
BUS A03 L				1									32-5/8		58
BUS A04 L		B01K2		1-01 *	P						2		0-7/8		59
BUS A04 L		B02K2		1-02 *	P						1		0-7/8		59
BUS A04 L		B03K2		1-03 *	P						2		0-7/8		59
BUS A04 L		B04K2		1-04 *							1		9-5/8		59
BUS A04 L		E03U2		1-05 *	P						2		0-7/8		59
BUS A04 L		E04U2		1-06 *	P						1		0-7/8		59
BUS A04 L		E05U2		1-07 *	P						2		0-7/8		59
BUS A04 L		E06U2		1-08 *	P						1		0-7/8		59
BUS A04 L		E07U2		1-09 *	P						2		0-7/8		59
BUS A04 L		E08U2		1-10 *	P						1		0-7/8		59
BUS A04 L		E09U2		1-11 *							2		11-1/8		59
BUS A04 L		B05K2		1-12 *	P						1		0-7/8		59
BUS A04 L		B06K2		1-13 *	P						2		0-7/8		59
BUS A04 L		B07K2		1-14 *	P						1		0-7/8		59
BUS A04 L		B08K2		1-15 *	P						2		0-7/8		59
BUS A04 L		B09K2		1-16 *	P										59
BUS A04 L				1									32-1/8		59

RUN NAME	A/P	PIN NAME	ORDER PIN	BAY - ORDER	Q	DRAW OPT	RV	RG	Y	X	Z	REMARKS	NC LENGTH FLAG	EXCEPTIONS	RUN NUMBER
BUS A05 L		B01K1		1-01 *	P						1		0-7/8		60
BUS A05 L		B02K1		1-02 *	P						2		0-7/8		60
BUS A05 L		B03K1		1-03 *	P						1		0-7/8		60
BUS A05 L		B04K1		1-04 *							2		9-5/8		60
BUS A05 L		E03V1		1-05 *	P						1		0-7/8		60
BUS A05 L		E04V1		1-06 *	P						2		0-7/8		60
BUS A05 L		E05V1		1-07 *	P						1		0-7/8		60
BUS A05 L		E06V1		1-08 *	P						2		0-7/8		60
BUS A05 L		E07V1		1-09 *	P						1		0-7/8		60
BUS A05 L		E08V1		1-10 *	P						2		0-7/8		60
BUS A05 L		E09V1		1-11 *							1		11-3/8		60
BUS A05 L		B05K1		1-12 *	P						2		0-7/8		60
BUS A05 L		B06K1		1-13 *	P						1		0-7/8		60
BUS A05 L		B07K1		1-14 *	P						2		0-7/8		60
BUS A05 L		B08K1		1-15 *	P						1		0-7/8		60
BUS A05 L		B09K1		1-16 *	P										60
BUS A05 L				1									32-3/8		60
BUS A06 L		B01L2		1-01 *	P						2		0-7/8		61
BUS A06 L		B02L2		1-02 *	P						1		0-7/8		61
BUS A06 L		B03L2		1-03 *	P						2		0-7/8		61
BUS A06 L		B04L2		1-04 *							1		9-7/8		61
BUS A06 L		E03U1		1-05 *	P						2		0-7/8		61
BUS A06 L		E04U1		1-06 *	P						1		0-7/8		61
BUS A06 L		E05U1		1-07 *	P						2		0-7/8		61
BUS A06 L		E06U1		1-08 *	P						1		0-7/8		61
BUS A06 L		E07U1		1-09 *	P						2		0-7/8		61
BUS A06 L		E08U1		1-10 *	P						1		0-7/8		61
BUS A06 L		E09U1		1-11 *							2		10-5/8		61
BUS A06 L		B05L2		1-12 *	P						1		0-7/8		61
BUS A06 L		B06L2		1-13 *	P						2		0-7/8		61
BUS A06 L		B07L2		1-14 *	P						1		0-7/8		61
BUS A06 L		B08L2		1-15 *	P						2		0-7/8		61
BUS A06 L		B09L2		1-16 *	P										61
BUS A06 L				1									31-7/8		61
BUS A07 L		B01L1		1-01 *	P						1		0-7/8		62
BUS A07 L		B02L1		1-02 *	P						2		0-7/8		62
BUS A07 L		B03L1		1-03 *	P						1		0-7/8		62
BUS A07 L		B04L1		1-04 *							2		8-7/8		62
BUS A07 L		E03P2		1-05 *	P						1		0-7/8		62
BUS A07 L		E04P2		1-06 *	P						2		0-7/8		62
BUS A07 L		E05P2		1-07 *	P						1		0-7/8		62
BUS A07 L		E06P2		1-08 *	P						2		0-7/8		62
BUS A07 L		E07P2		1-09 *	P						1		0-7/8		62
BUS A07 L		E08P2		1-10 *	P						2		0-7/8		62
BUS A07 L		E09P2		1-11 *							1		10-5/8		62
BUS A07 L		B05L1		1-12 *	P						2		0-7/8		62
BUS A07 L		B06L1		1-13 *	P						1		0-7/8		62
BUS A07 L		B07L1		1-14 *	P						2		0-7/8		62
BUS A07 L		B08L1		1-15 *	P						1		0-7/8		62
BUS A07 L		B09L1		1-16 *	P										62
BUS A07 L				1									30-7/8		62

RUN NAME	A/P	PIN NAME	ORDER PIN	BAY - ORDER	J	DRAW OPT	RV	RG	Y	X	Z	REMARKS	NC LENGTH FLAG	EXCEPTIONS	RUN NUMBER
BUS A08 L		B01M2		1-01 *	P						1		0-7/8		63
BUS A08 L		B02M2		1-02 *	P						2		0-7/8		63
BUS A08 L		B03M2		1-03 *	P						1		0-7/8		63
BUS A08 L		B04M2		1-04 *							2		8-5/8		63
BUS A08 L		E03N2		1-05 *	P						1		0-7/8		63
BUS A08 L		E04N2		1-06 *	P						2		0-7/8		63
BUS A08 L		E05N2		1-07 *	P						1		0-7/8		63
BUS A08 L		E06N2		1-08 *	P						2		0-7/8		63
BUS A08 L		E07N2		1-09 *	P						1		0-7/8		63
BUS A08 L		E08N2		1-10 *	P						2		0-7/8		63
BUS A08 L		E09N2		1-11 *							1		10-3/8		63
BUS A08 L		B05M2		1-12 *	P						2		0-7/8		63
BUS A08 L		B06M2		1-13 *	P						1		0-7/8		63
BUS A08 L		B07M2		1-14 *	P						2		0-7/8		63
BUS A08 L		B08M2		1-15 *	P						1		0-7/8		63
BUS A08 L		B09M2		1-16 *	P										63
BUS A08 L				1									30-3/8		63
BUS A09 L		B01M1		1-01 *	P						1		0-7/8		64
BUS A09 L		B02M1		1-02 *	P						2		0-7/8		64
BUS A09 L		B03M1		1-03 *	P						1		0-7/8		64
BUS A09 L		B04M1		1-04 *							2		8-7/8		64
BUS A09 L		E03R1		1-05 *	P						1		0-7/8		64
BUS A09 L		E04R1		1-06 *	P						2		0-7/8		64
BUS A09 L		E05R1		1-07 *	P						1		0-7/8		64
BUS A09 L		E06R1		1-08 *	P						2		0-7/8		64
BUS A09 L		E07R1		1-09 *	P						1		0-7/8		64
BUS A09 L		E08R1		1-10 *	P						2		0-7/8		64
BUS A09 L		E09R1		1-11 *							1		10-5/8		64
BUS A09 L		B05M1		1-12 *	P						2		0-7/8		64
BUS A09 L		B06M1		1-13 *	P						1		0-7/8		64
BUS A09 L		B07M1		1-14 *	P						2		0-7/8		64
BUS A09 L		B08M1		1-15 *	P						1		0-7/8		64
BUS A09 L		B09M1		1-16 *	P										64
BUS A09 L				1									30-7/8		64
BUS A10 L		B01N2		1-01 *	P						2		0-7/8		65
BUS A10 L		B02N2		1-02 *	P						1		0-7/8		65
BUS A10 L		B03N2		1-03 *	P						2		0-7/8		65
BUS A10 L		B04N2		1-04 *							1		9-1/8		65
BUS A10 L		E03P1		1-05 *	P						2		0-7/8		65
BUS A10 L		E04P1		1-06 *	P						1		0-7/8		65
BUS A10 L		E05P1		1-07 *	P						2		0-7/8		65
BUS A10 L		E06P1		1-08 *	P						1		0-7/8		65
BUS A10 L		E07P1		1-09 *	P						2		0-7/8		65
BUS A10 L		E08P1		1-10 *	P						1		0-7/8		65
BUS A10 L		E09P1		1-11 *							2		9-7/8		65
BUS A10 L		B05N2		1-12 *	P						1		0-7/8		65
BUS A10 L		B06N2		1-13 *	P						2		0-7/8		65
BUS A10 L		B07N2		1-14 *	P						1		0-7/8		65
BUS A10 L		B08N2		1-15 *	P						2		0-7/8		65
BUS A10 L		B09N2		1-16 *	P										65
BUS A10 L				1									30-3/8		65

RUN NAME	A/P	PIN NAME	ORDER PIN	BAY - ORDER	Q	DRAW OPT	RV	RG	Y	X	Z	REMARKS	NC LENGTH FLAG	EXCEPTIONS	RUN NUMBER
BUS A11 L		B01N1		1-01 *	P						2		0-7/8		66
BUS A11 L		B02N1		1-02 *	P						1		0-7/8		66
BUS A11 L		B03N1		1-03 *	P						2		0-7/8		66
BUS A11 L		B04N1		1-04 *							1		8-3/8		66
BUS A11 L		E03L1		1-05 *	P						2		0-7/8		66
BUS A11 L		E04L1		1-06 *	P						1		0-7/8		66
BUS A11 L		E05L1		1-07 *	P						2		0-7/8		66
BUS A11 L		E06L1		1-08 *	P						1		0-7/8		66
BUS A11 L		E07L1		1-09 *	P						2		0-7/8		66
BUS A11 L		E08L1		1-10 *	P						1		0-7/8		66
BUS A11 L		E09L1		1-11 *							2		9-7/8		66
BUS A11 L		B05N1		1-12 *	P						1		0-7/8		66
BUS A11 L		B06N1		1-13 *	P						2		0-7/8		66
BUS A11 L		B07N1		1-14 *	P						1		0-7/8		66
BUS A11 L		B08N1		1-15 *	P						2		0-7/8		66
BUS A11 L		B09N1		1-16 *	P										66
BUS A11 L				1									29-5/8		66
BUS A12 L		B01P2		1-01 *	P						2		0-7/8		67
BUS A12 L		B02P2		1-02 *	P						1		0-7/8		67
BUS A12 L		B03P2		1-03 *	P						2		0-7/8		67
BUS A12 L		B04P2		1-04 *							1		7-5/8		67
BUS A12 L		E03C1		1-05 *	P						2		0-7/8		67
BUS A12 L		E04C1		1-06 *	P						1		0-7/8		67
BUS A12 L		E05C1		1-07 *	P						2		0-7/8		67
BUS A12 L		E06C1		1-08 *	P						1		0-7/8		67
BUS A12 L		E07C1		1-09 *	P						2		0-7/8		67
BUS A12 L		E08C1		1-10 *	P						1		0-7/8		67
BUS A12 L		E09C1		1-11 *							2		8-5/8		67
BUS A12 L		B05P2		1-12 *	P						1		0-7/8		67
BUS A12 L		B06P2		1-13 *	P						2		0-7/8		67
BUS A12 L		B07P2		1-14 *	P						1		0-7/8		67
BUS A12 L		B08P2		1-15 *	P						2		0-7/8		67
BUS A12 L		B09P2		1-16 *	P										67
BUS A12 L				1									27-5/8		67
BUS A13 L		B01P1		1-01 *	P						1		0-7/8		68
BUS A13 L		B02P1		1-02 *	P						2		0-7/8		68
BUS A13 L		B03P1		1-03 *	P						1		0-7/8		68
BUS A13 L		B04P1		1-04 *							2		7-7/8		68
BUS A13 L		E03K2		1-05 *	P						1		0-7/8		68
BUS A13 L		E04K2		1-06 *	P						2		0-7/8		68
BUS A13 L		E05K2		1-07 *	P						1		0-7/8		68
BUS A13 L		E06K2		1-08 *	P						2		0-7/8		68
BUS A13 L		E07K2		1-09 *	P						1		0-7/8		68
BUS A13 L		E08K2		1-10 *	P						2		0-7/8		68
BUS A13 L		E09K2		1-11 *							1		9-7/8		68
BUS A13 L		B05P1		1-12 *	P						2		0-7/8		68
BUS A13 L		B06P1		1-13 *	P						1		0-7/8		68
BUS A13 L		B07P1		1-14 *	P						2		0-7/8		68
BUS A13 L		B08P1		1-15 *	P						1		0-7/8		68
BUS A13 L		B09P1		1-16 *	P										68
BUS A13 L				1									29-1/8		68

RUN NAME	A/P	PIN NAME	ORDER PIN	BAY - ORDER	Q	DRAW OPT	RV	RG	Y	X	Z	REMARKS	NC LENGTH FLAG	EXCEPTIONS	RUN NUMBER
BUS A14 L		B01R2		1-01 *	P						2		0-7/8		69
BUS A14 L		B02R2		1-02 *	P						1		0-7/8		69
BUS A14 L		B03R2		1-03 *	P						2		0-7/8		69
BUS A14 L		B04R2		1-04 *							1		8-3/8		69
BUS A14 L		E03K1		1-05 *	P						2		0-7/8		69
BUS A14 L		E04K1		1-06 *	P						1		0-7/8		69
BUS A14 L		E05K1		1-07 *	P						2		0-7/8		69
BUS A14 L		E06K1		1-08 *	P						1		0-7/8		69
BUS A14 L		E07K1		1-09 *	P						2		0-7/8		69
BUS A14 L		E08K1		1-10 *	P						1		0-7/8		69
BUS A14 L		E09K1		1-11 *							2		9-1/8		69
BUS A14 L		B05R2		1-12 *	P						1		0-7/8		69
BUS A14 L		B06R2		1-13 *	P						2		0-7/8		69
BUS A14 L		B07R2		1-14 *	P						1		0-7/8		69
BUS A14 L		B08R2		1-15 *	P						2		0-7/8		69
BUS A14 L		B09R2		1-16 *	P										69
BUS A14 L				1									28-7/8		69
BUS A15 L		B01R1		1-01 *	P						1		0-7/8		70
BUS A15 L		B02R1		1-02 *	P						2		0-7/8		70
BUS A15 L		B03R1		1-03 *	P						1		0-7/8		70
BUS A15 L		B04R1		1-04 *							2		7-1/8		70
BUS A15 L		E03D2		1-05 *							1		0-7/8		70
BUS A15 L		E04D2		1-06 *							2		0-7/8		70
BUS A15 L		E05D2		1-07 *							1		0-7/8		70
BUS A15 L		E06D2		1-08 *							2		0-7/8		70
BUS A15 L		E07D2		1-09 *							1		0-7/8		70
BUS A15 L		E08D2		1-10 *							2		0-7/8		70
BUS A15 L		E09D2		1-11 *							1		9-1/8		70
BUS A15 L		B05R1		1-12 *	P						2		0-7/8		70
BUS A15 L		B06R1		1-13 *	P						1		0-7/8		70
BUS A15 L		B07R1		1-14 *	P						2		0-7/8		70
BUS A15 L		B08R1		1-15 *	P						1		0-7/8		70
BUS A15 L		B09R1		1-16 *	P										70
BUS A15 L				1									27-5/8		70
BUS A16 L		B01S2		1-01 *	P						2		0-7/8		71
BUS A16 L		B02S2		1-02 *	P						1		0-7/8		71
BUS A16 L		B03S2		1-03 *	P						2		0-7/8		71
BUS A16 L		B04S2		1-04 *							1		7-3/8		71
BUS A16 L		E03E2		1-05 *	P						2		0-7/8		71
BUS A16 L		E04E2		1-06 *	P						1		0-7/8		71
BUS A16 L		E05E2		1-07 *	P						2		0-7/8		71
BUS A16 L		E06E2		1-08 *	P						1		0-7/8		71
BUS A16 L		E07E2		1-09 *	P						2		0-7/8		71
BUS A16 L		E08E2		1-10 *	P						1		0-7/8		71
BUS A16 L		E09E2		1-11 *							2		8-7/8		71
BUS A16 L		B05S2		1-12 *	P						1		0-7/8		71
BUS A16 L		B06S2		1-13 *	P						2		0-7/8		71
BUS A16 L		B07S2		1-14 *	P						1		0-7/8		71
BUS A16 L		B08S2		1-15 *	P						2		0-7/8		71
BUS A16 L		B09S2		1-16 *	P										71
BUS A16 L				1									27-5/8		71

RUN NAME	A/P	PIN NAME	ORDER PIN	BAY - ORDER	Q	DRAW OPT	RV	RG	Y	X	Z	REMARKS	NC LENGTH FLAG	EXCEPTIONS	RUN NUMBER
BUS A17 L		B01S1		1-01 *	P						1		0-7/8		72
BUS A17 L		B02S1		1-02 *	P						2		0-7/8		72
BUS A17 L		B03S1		1-03 *	P						1		0-7/8		72
BUS A17 L		B04S1		1-04 *							2		7-1/8		72
BUS A17 L		E03D1		1-05 *	P						1		0-7/8		72
BUS A17 L		E04D1		1-06 *	P						2		0-7/8		72
BUS A17 L		E05D1		1-07 *	P						1		0-7/8		72
BUS A17 L		E06D1		1-08 *	P						2		0-7/8		72
BUS A17 L		E07D1		1-09 *	P						1		0-7/8		72
BUS A17 L		E08D1		1-10 *	P						2		0-7/8		72
BUS A17 L		E09D1		1-11 *							1		8-7/8		72
BUS A17 L		B05S1		1-12 *	P						2		0-7/8		72
BUS A17 L		B06S1		1-13 *	P						1		0-7/8		72
BUS A17 L		B07S1		1-14 *	P						2		0-7/8		72
BUS A17 L		B08S1		1-15 *	P						1		0-7/8		72
BUS A17 L		B09S1		1-16 *	P										72
BUS A17 L				1									27-3/8		72
BUS D00 L		A01C1		1-01 *	P						1		0-7/8		73
BUS D00 L		A02C1		1-02 *							2		0-7/8		73
BUS D00 L		A03C1		1-03 *							1		0-7/8		73
BUS D00 L		A04C1		1-04 *							2		7-3/8		73
BUS D00 L		C03S2		1-05 *							1		0-7/8		73
BUS D00 L		C04S2		1-06 *							2		0-7/8		73
BUS D00 L		C05S2		1-07 *							1		0-7/8		73
BUS D00 L		C06S2		1-08 *							2		0-7/8		73
BUS D00 L		C07S2		1-09 *							1		0-7/8		73
BUS D00 L		C08S2		1-10 *							2		0-7/8		73
BUS D00 L		C09S2		1-11 *							1		9-3/8		73
BUS D00 L		A05C1		1-12 *							2		0-7/8		73
BUS D00 L		A06C1		1-13 *							1		0-7/8		73
BUS D00 L		A07C1		1-14 *							2		0-7/8		73
BUS D00 L		A08C1		1-15 *							1		0-7/8		73
BUS D00 L		A09C1		1-16 *											73
BUS D00 L				1									28-1/8		73
BUS D01 L		A01D2		1-01 *	P						2		0-7/8		74
BUS D01 L		A02D2		1-02 *	P						1		0-7/8		74
BUS D01 L		A03D2		1-03 *	P						2		0-7/8		74
BUS D01 L		A04D2		1-04 *							1		7-3/8		74
BUS D01 L		C03R2		1-05 *	P						2		0-7/8		74
BUS D01 L		C04R2		1-06 *	P						1		0-7/8		74
BUS D01 L		C05R2		1-07 *	P						2		0-7/8		74
BUS D01 L		C06R2		1-08 *	P						1		0-7/8		74
BUS D01 L		C07R2		1-09 *	P						2		0-7/8		74
BUS D01 L		C08R2		1-10 *	P						1		0-7/8		74
BUS D01 L		C09R2		1-11 *							2		8-7/8		74
BUS D01 L		A05D2		1-12 *	P						1		0-7/8		74
BUS D01 L		A06D2		1-13 *	P						2		0-7/8		74
BUS D01 L		A07D2		1-14 *	P						1		0-7/8		74
BUS D01 L		A08D2		1-15 *	P						2		0-7/8		74
BUS D01 L		A09D2		1-16 *	P										74
BUS D01 L				1									27-5/8		74

RUN NAME	A/P	PIN NAME	ORDER PIN	BAY - ORDER	Q	DRAW OPT	RV	RG	Y	X	Z	REMARKS	NC LENGTH FLAG	EXCEPTIONS	RUN NUMBER
BUS D02 L		A01D1		1-01 *	P						1		0-7/8		75
BUS D02 L		A02D1		1-02 *	P						2		0-7/8		75
BUS D02 L		A03D1		1-03 *	P						1		0-7/8		75
BUS D02 L		A04D1		1-04 *							2		7-5/8		75
BUS D02 L		C03U2		1-05 *	P						1		0-7/8		75
BUS D02 L		C04U2		1-06 *	P						2		0-7/8		75
BUS D02 L		C05U2		1-07 *							1		6-7/8		75
BUS D02 L		F05E2		1-08 *	P						1		1-3/8		75
BUS D02 L		F03E2		1-09 *	P						1		0-7/8		75
BUS D02 L		F04E2		1-10 *	P						2		1-3/8		75
BUS D02 L		F06E2		1-11 *	P						2		0-7/8		75
BUS D02 L		F07E2		1-12 *	P						1		0-7/8		75
BUS D02 L		F08E2		1-13 *	P						2		0-7/8		75
BUS D02 L		F09E2		1-14 *							1		8-3/8		75
BUS D02 L		C06U2		1-15 *	P						2		0-7/8		75
BUS D02 L		C07U2		1-16 *	P						1		0-7/8		75
BUS D02 L		C08U2		1-17 *	P						2		0-7/8		75
BUS D02 L		C09U2		1-18 *							1		9-3/8		75
BUS D02 L		A05D1		1-19 *	P						2		0-7/8		75
BUS D02 L		A06D1		1-20 *	P						1		0-7/8		75
BUS D02 L		A07D1		1-21 *	P						2		0-7/8		75
BUS D02 L		A08D1		1-22 *	P						1		0-7/8		75
BUS D02 L		A09D1		1-23 *											75
BUS D02 L				1									49-0/8		75
BUS D03 L		A01E2		1-01 *	P						1		0-7/8		76
BUS D03 L		A02E2		1-02 *	P						2		0-7/8		76
BUS D03 L		A03E2		1-03 *	P						1		0-7/8		76
BUS D03 L		A04E2		1-04 *							2		7-3/8		76
BUS D03 L		C03T2		1-05 *	P						1		0-7/8		76
BUS D03 L		C04T2		1-06 *	P						2		0-7/8		76
BUS D03 L		C05T2		1-07 *							1		7-7/8		76
BUS D03 L		F05L1		1-08 *	P						1		1-3/8		76
BUS D03 L		F03L1		1-09 *	P						1		0-7/8		76
BUS D03 L		F04L1		1-10 *	P						2		1-3/8		76
BUS D03 L		F06L1		1-11 *	P						2		0-7/8		76
BUS D03 L		F07L1		1-12 *	P						1		0-7/8		76
BUS D03 L		F08L1		1-13 *	P						2		0-7/8		76
BUS D03 L		F09L1		1-14 *							1		8-7/8		76
BUS D03 L		C06T2		1-15 *	P						2		0-7/8		76
BUS D03 L		C07T2		1-16 *	P						1		0-7/8		76
BUS D03 L		C08T2		1-17 *	P						2		0-7/8		76
BUS D03 L		C09T2		1-18 *							1		9-1/8		76
BUS D03 L		A05E2		1-19 *	P						2		0-7/8		76
BUS D03 L		A06E2		1-20 *	P						1		0-7/8		76
BUS D03 L		A07E2		1-21 *	P						2		0-7/8		76
BUS D03 L		A08E2		1-22 *	P						1		0-7/8		76
BUS D03 L		A09E2		1-23 *											76
BUS D03 L				1									50-0/8		76

RUN NAME	A/P	PIN NAME	ORDER PIN	BAY - ORDER	Q	DRAW OPT	RV	RG	Y	X	Z	REMARKS	NC LENGTH FLAG	EXCEPTIONS	RUN NUMBER
BUS D04 L		A01E1		1-01 *	P						1		0-7/8		77
BUS D04 L		A02E1		1-02 *	P						2		0-7/8		77
BUS D04 L		A03E1		1-03 *	P						1		0-7/8		77
BUS D04 L		A04E1		1-04 *							2		6-5/8		77
BUS D04 L		C03N2		1-05 *	P						1		0-7/8		77
BUS D04 L		C04N2		1-06 *	P						2		0-7/8		77
BUS D04 L		C05N2		1-07 *							1		8-3/8		77
BUS D04 L		F05N2		1-08 *	P						1		1-3/8		77
BUS D04 L		F03N2		1-09 *	P						1		0-7/8		77
BUS D04 L		F04N2		1-10 *	P						2		1-3/8		77
BUS D04 L		F06N2		1-11 *	P						2		0-7/8		77
BUS D04 L		F07N2		1-12 *	P						1		0-7/8		77
BUS D04 L		F08N2		1-13 *	P						2		0-7/8		77
BUS D04 L		F09N2		1-14 *							1		9-7/8		77
BUS D04 L		C06N2		1-15 *	P						2		0-7/8		77
BUS D04 L		C07N2		1-16 *	P						1		0-7/8		77
BUS D04 L		C08N2		1-17 *	P						2		0-7/8		77
BUS D04 L		C09N2		1-18 *							1		8-7/8		77
BUS D04 L		A05E1		1-19 *	P						2		0-7/8		77
BUS D04 L		A06E1		1-20 *	P						1		0-7/8		77
BUS D04 L		A07E1		1-21 *	P						2		0-7/8		77
BUS D04 L		A08E1		1-22 *	P						1		0-7/8		77
BUS D04 L		A09E1		1-23 *											77
BUS D04 L				1									50-4/8		77
BUS D05 L		A01F2		1-01 *	P						2		0-7/8		78
BUS D05 L		A02F2		1-02 *	P						1		0-7/8		78
BUS D05 L		A03F2		1-03 *	P						2		0-7/8		78
BUS D05 L		A04F2		1-04 *							1		7-1/8		78
BUS D05 L		C03P2		1-05 *	P						2		0-7/8		78
BUS D05 L		C04P2		1-06 *	P						1		0-7/8		78
BUS D05 L		C05P2		1-07 *							2		7-5/8		78
BUS D05 L		F05F1		1-08 *	P						2		1-3/8		78
BUS D05 L		F03F1		1-09 *	P						2		0-7/8		78
BUS D05 L		F04F1		1-10 *	P						1		1-3/8		78
BUS D05 L		F06F1		1-11 *	P						1		0-7/8		78
BUS D05 L		F07F1		1-12 *	P						2		0-7/8		78
BUS D05 L		F08F1		1-13 *	P						1		0-7/8		78
BUS D05 L		F09F1		1-14 *							1		8-7/8		78
BUS D05 L		C06P2		1-15 *	P						1		0-7/8		78
BUS D05 L		C07P2		1-16 *	P						2		0-7/8		78
BUS D05 L		C08P2		1-17 *	P						1		0-7/8		78
BUS D05 L		C09P2		1-18 *							2		8-3/8		78
BUS D05 L		A05F2		1-19 *	P						1		0-7/8		78
BUS D05 L		A06F2		1-20 *	P						2		0-7/8		78
BUS D05 L		A07F2		1-21 *	P						1		0-7/8		78
BUS D05 I		A08F2		1-22 *	P						2		0-7/8		78
BUS D05 L		A09F2		1-23 *											78
BUS D05 L				1									48-6/8		78

RUN NAME	A/P	PIN NAME	ORDER PIN	BAY - ORDER	Q	DRAW OPT	RV	RG	Y	X	Z	REMARKS	NC LENGTH FLAG	EXCEPTIONS	RUN NUMBER
BUS D06 L		A01F1		1-01 *	P						1		0-7/8		79
BUS D06 L		A02F1		1-02 *	P						2		0-7/8		79
BUS D06 L		A03F1		1-03 *	P						1		0-7/8		79
BUS D06 L		A04F1		1-04 *							2		7-3/8		79
BUS D06 L		C03V2		1-05 *	P						1		0-7/8		79
BUS D06 L		C04V2		1-06 *	P						2		0-7/8		79
BUS D06 L		C05V2		1-07 *							1		6-7/8		79
BUS D06 L		F05F2		1-08 *	P						1		1-3/8		79
BUS D06 L		F03F2		1-09 *	P						1		0-7/8		79
BUS D06 L		F04F2		1-10 *	P						2		1-3/8		79
BUS D06 L		F06F2		1-11 *	P						2		0-7/8		79
BUS D06 L		F07F2		1-12 *	P						1		0-7/8		79
BUS D06 L		F08F2		1-13 *	P						2		0-7/8		79
BUS D06 L		F09F2		1-14 *							1		8-3/8		79
BUS D06 L		C06V2		1-15 *	P						2		0-7/8		79
BUS D06 L		C07V2		1-16 *	P						1		0-7/8		79
BUS D06 L		C08V2		1-17 *	P						2		0-7/8		79
BUS D06 L		C09V2		1-18 *							1		9-3/8		79
BUS D06 L		A05F1		1-19 *	P						2		0-7/8		79
BUS D06 L		A06F1		1-20 *	P						1		0-7/8		79
BUS D06 L		A07F1		1-21 *	P						2		0-7/8		79
BUS D06 L		A08F1		1-22 *	P						1		0-7/8		79
BUS D06 L		A09F1		1-23 *											79
BUS D06 L				1									48-6/8		79
BUS D07 L		A01H2		1-01 *	P						1		0-7/8		80
BUS D07 L		A02H2		1-02 *	P						2		0-7/8		80
BUS D07 L		A03H2		1-03 *	P						1		0-7/8		80
BUS D07 L		A04H2		1-04 *							2		6-5/8		80
BUS D07 L		C03M2		1-05 *	P						1		0-7/8		80
BUS D07 L		C04M2		1-06 *	P						2		0-7/8		80
BUS D07 L		C05M2		1-07 *							1		8-1/8		80
BUS D07 L		F05H1		1-08 *	P						1		1-3/8		80
BUS D07 L		F03H1		1-09 *	P						1		0-7/8		80
BUS D07 L		F04H1		1-10 *	P						2		1-3/8		80
BUS D07 L		F06H1		1-11 *	P						2		0-7/8		80
BUS D07 L		F07H1		1-12 *	P						1		0-7/8		80
BUS D07 L		F08H1		1-13 *	P						2		0-7/8		80
BUS D07 L		F09H1		1-14 *							1		9-1/8		80
BUS D07 L		C06M2		1-15 *	P						2		0-7/8		80
BUS D07 L		C07M2		1-16 *	P						1		0-7/8		80
BUS D07 L		C08M2		1-17 *	P						2		0-7/8		80
BUS D07 L		C09M2		1-18 *							1		8-1/8		80
BUS D07 L		A05H2		1-19 *	P						2		0-7/8		80
BUS D07 L		A06H2		1-20 *	P						1		0-7/8		80
BUS D07 L		A07H2		1-21 *	P						2		0-7/8		80
BUS D07 L		A08H2		1-22 *	P						1		0-7/8		80
BUS D07 L		A09H2		1-23 *											80
BUS D07 L				1									48-6/8		80

RUN NAME	A/P	PIN NAME	ORDER PIN	BAY - ORDER	Q	DRAW OPT	RV	RG	Y	X	Z	REMARKS	NC LENGTH FLAG	EXCEPTIONS	RUN NUMBER
BUS D08 L		A01H1		1-01 *	P						1		0-7/8		81
BUS D08 L		A02H1		1-02 *	P						2		0-7/8		81
BUS D08 L		A03H1		1-03 *	P						1		0-7/8		81
BUS D08 L		A04H1		1-04 *							2		6-1/8		81
BUS D08 L		C03L2		1-05 *	P						1		0-7/8		81
BUS D08 L		C04L2		1-06 *	P						2		0-7/8		81
BUS D08 L		C05L2		1-07 *							1		8-5/8		81
BUS D08 L		F05K1		1-08 *	P						1		1-3/8		81
BUS D08 L		F03K1		1-09 *	P						1		0-7/8		81
BUS D08 L		F04K1		1-10 *	P						2		1-3/8		81
BUS D08 L		F06K1		1-11 *	P						2		0-7/8		81
BUS D08 L		F07K1		1-12 *	P						1		0-7/8		81
BUS D08 L		F08K1		1-13 *	P						2		0-7/8		81
BUS D08 L		F09K1		1-14 *							1		9-3/8		81
BUS D08 L		C06L2		1-15 *	P						2		0-7/8		81
BUS D08 L		C07L2		1-16 *	P						1		0-7/8		81
BUS D08 L		C08L2		1-17 *	P						2		0-7/8		81
BUS D08 L		C09L2		1-18 *							1		8-3/8		81
BUS D08 L		A05H1		1-19 *	P						2		0-7/8		81
BUS D08 L		A06H1		1-20 *	P						1		0-7/8		81
BUS D08 L		A07H1		1-21 *	P						2		0-7/8		81
BUS D08 L		A08H1		1-22 *	P						1		0-7/8		81
BUS D08 L		A09H1		1-23 *											81
BUS D08 L				1									49-2/8		81
BUS D09 L		A01J2		1-01 *	P						2		0-7/8		82
BUS D09 L		A02J2		1-02 *	P						1		0-7/8		82
BUS D09 L		A03J2		1-03 *	P						2		0-7/8		82
BUS D09 L		A04J2		1-04 *							1		6-3/8		82
BUS D09 L		C03K2		1-05 *	P						2		0-7/8		82
BUS D09 L		C04K2		1-06 *	P						1		0-7/8		82
BUS D09 L		C05K2		1-07 *	P						2		0-7/8		82
BUS D09 L		C06K2		1-08 *	P						1		0-7/8		82
BUS D09 L		C07K2		1-09 *	P						2		0-7/8		82
BUS D09 L		C08K2		1-10 *	P						1		0-7/8		82
BUS D09 L		C09K2		1-11 *							2		7-5/8		82
BUS D09 L		A05J2		1-12 *	P						1		0-7/8		82
BUS D09 L		A06J2		1-13 *	P						2		0-7/8		82
BUS D09 L		A07J2		1-14 *	P						1		0-7/8		82
BUS D09 L		A08J2		1-15 *	P						2		0-7/8		82
BUS D09 L		A09J2		1-16 *	P										82
BUS D09 L				1									25-3/8		82

RUN NAME	A/P	PIN NAME	ORDER PIN	BAY - ORDER	Q	DRAW OPT	RV	RG	Y	X	Z	REMARKS	NC LENGTH FLAG	EXCEPTIONS	RUN NUMBER
BUS D10 L		A01J1		1-01 *	P						1		0-7/8		83
BUS D10 L		A02J1		1-02 *	P						2		0-7/8		83
BUS D10 L		A03J1		1-03 *	P						1		0-7/8		83
BUS D10 L		A04J1		1-04 *							2		5-7/8		83
BUS D10 L		C03J2		1-05 *	P						1		0-7/8		83
BUS D10 L		C04J2		1-06 *	P						2		0-7/8		83
BUS D10 L		C05J2		1-07 *	P						1		0-7/8		83
BUS D10 L		C06J2		1-08 *	P						2		0-7/8		83
BUS D10 L		C07J2		1-09 *	P						1		0-7/8		83
BUS D10 L		C08J2		1-10 *	P						2		0-7/8		83
BUS D10 L		C09J2		1-11 *							1		7-7/8		83
BUS D10 L		A05J1		1-12 *	P						2		0-7/8		83
BUS D10 L		A06J1		1-13 *	P						1		0-7/8		83
BUS D10 L		A07J1		1-14 *	P						2		0-7/8		83
BUS D10 L		A08J1		1-15 *	P						1		0-7/8		83
BUS D10 L		A09J1		1-16 *	P										83
BUS D10 L				1									25-1/8		83
BUS D11 L		A01K2		1-01 *	P						2		0-7/8		84
BUS D11 L		A02K2		1-02 *	P						1		0-7/8		84
BUS D11 L		A03K2		1-03 *	P						2		0-7/8		84
BUS D11 L		A04K2		1-04 *							1		6-1/8		84
BUS D11 L		C03H1		1-05 *	P						2		0-7/8		84
BUS D11 L		C04H1		1-06 *	P						1		0-7/8		84
BUS D11 L		C05H1		1-07 *	P						2		0-7/8		84
BUS D11 L		C06H1		1-08 *	P						1		0-7/8		84
BUS D11 L		C07H1		1-09 *	P						2		0-7/8		84
BUS D11 L		C08H1		1-10 *	P						1		0-7/8		84
BUS D11 L		C09H1		1-11 *							2		7-1/8		84
BUS D11 L		A05K2		1-12 *	P						1		0-7/8		84
BUS D11 L		A06K2		1-13 *	P						2		0-7/8		84
BUS D11 L		A07K2		1-14 *	P						1		0-7/8		84
BUS D11 L		A08K2		1-15 *	P						2		0-7/8		84
BUS D11 L		A09K2		1-16 *	P										84
BUS D11 L				1									24-5/8		84
BUS D12 L		A01K1		1-01 *	P						1		0-7/8		85
BUS D12 L		A02K1		1-02 *	P						2		0-7/8		85
BUS D12 L		A03K1		1-03 *	P						1		0-7/8		85
BUS D12 L		A04K1		1-04 *							2		5-5/8		85
BUS D12 L		C03H2		1-05 *	P						1		0-7/8		85
BUS D12 L		C04H2		1-06 *	P						2		0-7/8		85
BUS D12 L		C05H2		1-07 *	P						1		0-7/8		85
BUS D12 L		C06H2		1-08 *	P						2		0-7/8		85
BUS D12 L		C07H2		1-09 *	P						1		0-7/8		85
BUS D12 L		C08H2		1-10 *	P						2		0-7/8		85
BUS D12 L		C09H2		1-11 *							1		7-5/8		85
BUS D12 L		A05K1		1-12 *	P						2		0-7/8		85
BUS D12 L		A06K1		1-13 *	P						1		0-7/8		85
BUS D12 L		A07K1		1-14 *	P						2		0-7/8		85
BUS D12 L		A08K1		1-15 *	P						1		0-7/8		85
BUS D12 L		A09K1		1-16 *	P										85
BUS D12 L				1									24-5/8		85

RUN NAME	A/P	PIN NAME	ORDER PIN	BAY - ORDER	Q	DRAW OPT	RV	RG	Y	X	Z	REMARKS	NC LENGTH FLAG	EXCEPTIONS	RUN NUMBER
BUS D13 L		A01L2		1-01 *	P						1		0-7/8		86
BUS D13 L		A02L2		1-02 *	P						2		0-7/8		86
BUS D13 L		A03L2		1-03 *	P						1		0-7/8		86
BUS D13 L		A04L2		1-04 *							2		5-5/8		86
BUS D13 L		C03F2		1-05 *	P						1		0-7/8		86
BUS D13 L		C04F2		1-06 *	P						2		0-7/8		86
BUS D13 L		C05F2		1-07 *	P						1		0-7/8		86
BUS D13 L		C06F2		1-08 *	P						2		0-7/8		86
BUS D13 L		C07F2		1-09 *	P						1		0-7/8		86
BUS D13 L		C08F2		1-10 *	P						2		0-7/8		86
BUS D13 L		C09F2		1-11 *							1		7-1/8		86
BUS D13 L		A05L2		1-12 *	P						2		0-7/8		86
BUS D13 L		A06L2		1-13 *	P						1		0-7/8		86
BUS D13 L		A07L2		1-14 *	P						2		0-7/8		86
BUS D13 L		A08L2		1-15 *	P						1		0-7/8		86
BUS D13 L		A09L2		1-16 *	P										86
BUS D13 L				1									24-1/8		86
BUS D14 L		A01L1		1-01 *	P						1		0-7/8		87
BUS D14 L		A02L1		1-02 *	P						2		0-7/8		87
BUS D14 L		A03L1		1-03 *	P						1		0-7/8		87
BUS D14 L		A04L1		1-04 *							2		5-3/8		87
BUS D14 L		C03E2		1-05 *	P						1		0-7/8		87
BUS D14 L		C04E2		1-06 *	P						2		0-7/8		87
BUS D14 L		C05E2		1-07 *	P						1		0-7/8		87
BUS D14 L		C06E2		1-08 *	P						2		0-7/8		87
BUS D14 L		C07E2		1-09 *	P						1		0-7/8		87
BUS D14 L		C08E2		1-10 *	P						2		0-7/8		87
BUS D14 L		C09E2		1-11 *							1		7-1/8		87
BUS D14 L		A05L1		1-12 *	P						2		0-7/8		87
BUS D14 L		A06L1		1-13 *	P						1		0-7/8		87
BUS D14 L		A07L1		1-14 *	P						2		0-7/8		87
BUS D14 L		A08L1		1-15 *	P						1		0-7/8		87
BUS D14 L		A09L1		1-16 *	P										87
BUS D14 L				1									23-7/8		87
BUS D15 L		A01M2		1-01 *	P						1		0-7/8		88
BUS D15 L		A02M2		1-02 *	P						2		0-7/8		88
BUS D15 L		A03M2		1-03 *	P						1		0-7/8		88
BUS D15 L		A04M2		1-04 *							2		5-1/8		88
BUS D15 L		C03D2		1-05 *							1		0-7/8		88
BUS D15 L		C04D2		1-06 *							2		0-7/8		88
BUS D15 L		C05D2		1-07 *							1		0-7/8		88
BUS D15 L		C06D2		1-08 *							2		0-7/8		88
BUS D15 L		C07D2		1-09 *							1		0-7/8		88
BUS D15 L		C08D2		1-10 *							2		0-7/8		88
BUS D15 L		C09D2		1-11 *							1		6-7/8		88
BUS D15 L		A05M2		1-12 *	P						2		0-7/8		88
BUS D15 L		A06M2		1-13 *	P						1		0-7/8		88
BUS D15 L		A07M2		1-14 *	P						2		0-7/8		88
BUS D15 L		A08M2		1-15 *	P						1		0-7/8		88
BUS D15 L		A09M2		1-16 *	P										88
BUS D15 L				1									23-3/8		88

RUN NAME	A/P	PIN NAME	ORDER PIN	BAY - ORDER	Q	DRAW OPT	RV	RG	Y	X	Z	REMARKS	NC LENGTH FLAG	EXCEPTIONS	RUN NUMBER
C BG IN		D03U2		1-01 *							1		3-7/8		89
C BG IN		F03B1		1-02 *											89
C BG IN				1									3-7/8		89
C BG OUT		D03V2		1-01 *							1		3-7/8		90
C BG OUT		F03A1		1-02 *											90
C BG OUT				1									3-7/8		90
C BR OUT		D03J2		1-01 *							1		6-5/8		91
C BR OUT		F03P1		1-02 *							2		1		91
C BR OUT		F03U2		1-03 *											91
C BR OUT				1									7-5/8		91
C IN		D03H1		1-01 *							1		3-3/8		92
C IN		E03M1		1-02 *											92
C IN				1									3-3/8		92
C INT A		D03N1		1-01 *							1		6-3/8		93
C INT A		F03U1		1-02 *											93
C INT A				1									6-3/8		93
C INT B		C03J1		1-01 *							1		8-5/8		94
C INT B		F03K2		1-02 *											94
C INT B				1									8-5/8		94
C INT ENB A		D03M1		1-01 *							1		6-5/8		95
C INT ENB A		F03V1		1-02 *											95
C INT ENB A				1									6-5/8		95
C INT ENB B		C03L1		1-01 *							1		8-1/8		96
C INT ENB B		F03H2		1-02 *											96
C INT ENB B				1									8-1/8		96
C OUT HIGH		D03K1		1-01 *							1		3-3/8		97
C OUT HIGH		E03M2		1-02 *											97
C OUT HIGH				1									3-3/8		97
C OUT LOW		D03D1		1-01 *							1		3-7/8		98
C OUT LOW		E03N1		1-02 *											98
C OUT LOW				1									3-7/8		98
C SEL 0		D03F1		1-01 *							1		4-1/8		99
C SEL 0		E03S2		1-02 *											99
C SEL 0				1									4-1/8		99
C SEL 4		D03E1		1-01 *							1		4-3/8		100
C SEL 4		E03R2		1-02 *											100
C SEL 4				1									4-3/8		100
C SEL 6		D03C1		1-01 *							1		4-3/8		101
C SEL 6		E03S1		1-02 *											101
C SEL 6				1									4-3/8		101
C SER 2		D03J1		1-01 *							1		4-1/8		102
C SER 2		E03T2		1-02 *											102
C SER 2				1									4-1/8		102

RUN NAME	A/P	PIN NAME	ORDER PIN	BAY - ORDER	Q	DRAW OPT	RV	RG	Y	X	Z	REMARKS	NC LENGTH FLAG	EXCEPTIONS	RUN NUMBER
C SSYN IN H		D03V1		1-01 *							1		0-7/8		103
C SSYN IN H		E03B1		1-02 *											103
C SSYN IN H				1									0-7/8		103
C0 L		B01U2		1-01 *							1		0-7/8		104
C0 L		B02U2		1-02 *							2		0-7/8		104
C0 L		B03U2		1-03 *							1		0-7/8		104
C0 L		B04U2		1-04 *							2		7-3/8		104
C0 L		E03J2		1-05 *	P						1		0-7/8		104
C0 L		E04J2		1-06 *	P						2		0-7/8		104
C0 L		E05J2		1-07 *	P						1		0-7/8		104
C0 L		E06J2		1-08 *	P						2		0-7/8		104
C0 L		E07J2		1-09 *	P						1		0-7/8		104
C0 L		E08J2		1-10 *	P						2		0-7/8		104
C0 L		E09J2		1-11 *							1		9-1/8		104
C0 L		B05U2		1-12 *							2		0-7/8		104
C0 L		B06U2		1-13 *							1		0-7/8		104
C0 L		B07U2		1-14 *							2		0-7/8		104
C0 L		B08U2		1-15 *							1		0-7/8		104
C0 L		B09U2		1-16 *											104
C0 L				1									27-7/8		104
C1 L		B01T2		1-01 *							2		0-7/8		105
C1 L		B02T2		1-02 *							1		0-7/8		105
C1 L		B03T2		1-03 *							2		0-7/8		105
C1 L		B04T2		1-04 *							1		7-3/8		105
C1 L		E03F2		1-05 *	P						2		0-7/8		105
C1 L		E04F2		1-06 *	P						1		0-7/8		105
C1 L		E05F2		1-07 *	P						2		0-7/8		105
C1 L		E06F2		1-08 *	P						1		0-7/8		105
C1 L		E07F2		1-09 *	P						2		0-7/8		105
C1 L		E08F2		1-10 *	P						1		0-7/8		105
C1 L		E09F2		1-11 *							2		8-7/8		105
C1 L		B05T2		1-12 *							1		0-7/8		105
C1 L		B06T2		1-13 *							2		0-7/8		105
C1 L		B07T2		1-14 *							1		0-7/8		105
C1 L		B08T2		1-15 *							2		0-7/8		105
C1 L		B09T2		1-16 *											105
C1 L				1									27-5/8		105
D BG IN		D04U2		1-01 *							1		3-7/8		106
D BG IN		F04B1		1-02 *											106
D BG IN				1									3-7/8		106
D BG OUT		D04V2		1-01 *							1		3-7/8		107
D BG OUT		F04A1		1-02 *											107
D BG OUT				1									3-7/8		107
D BR OUT		D04J2		1-01 *							1		6-5/8		108
D BR OUT		F04P1		1-02 *							2		1		108
D BR OUT		F04U2		1-03 *											108
D BR OUT				1									7-5/8		108

RUN NAME	A/P	PIN NAME	ORDER PIN	RAY - ORDER	Q	DRAW OPT	RV	RG	Y	X	Z	REMARKS	NC LENGTH FLAG	EXCEPTIONS	RUN NUMBER
D IN		D04H1		1-01 *							1		3-3/8		109
D IN		E04M1		1-02 *											109
D IN				1									3-3/8		109
D INT A		D04N1		1-01 *							1		6-3/8		110
D INT A		F04U1		1-02 *											110
D INT A				1									6-3/8		110
D INT B		C04J1		1-01 *							1		8-5/8		111
D INT B		F04K2		1-02 *											111
D INT B				1									8-5/8		111
D INT ENB A		D04M1		1-01 *							1		6-5/8		112
D INT ENB A		F04V1		1-02 *											112
D INT ENB A				1									6-5/8		112
D INT ENB B		C04L1		1-01 *							1		8-1/8		113
D INT ENB B		F04H2		1-02 *											113
D INT ENB B				1									8-1/8		113
D O T HIGH		D04K1		1-01 *							1		3-3/8		114
D OUT HIGH		E04M2		1-02 *											114
D OUT HIGH				1									3-3/8		114
D OUT LOW		D04D1		1-01 *							1		3-7/8		115
D OUT LOW		E04N1		1-02 *											115
D OUT LOW				1									3-7/8		115
D SEL 0		D04F1		1-01 *							1		4-1/8		116
D SEL 0		E04S2		1-02 *											116
D SEL 0				1									4-1/8		116
D SEL 4		D04E1		1-01 *							1		4-3/8		117
D SEL 4		E04R2		1-02 *											117
D SEL 4				1									4-3/8		117
D SEL 6		D04C1		1-01 *							1		4-3/8		118
D SEL 6		E04S1		1-02 *											118
D SEL 6				1									4-3/8		118
D SER 2		D04J1		1-01 *							1		4-1/8		119
D SER 2		E04T2		1-02 *											119
D SER 2				1									4-1/8		119
D SSYN IN H		D04V1		1-01 *							1		0-7/8		120
D SSYN IN H		E04B1		1-02 *											120
D SSYN IN H				1									0-7/8		120

RUN NAME	A/P	PIN NAME	ORDER PIN	BAY - ORDER	Q	DRAW OPT	RV	RG	Y	X	Z	REMARKS	NC LENGTH FLAG	EXCEPTIONS	RUN NUMBER
DC L		B01F2		1-01 *	P						2		0-7/8		121
DC L		B02F2		1-02 *	P						1		0-7/8		121
DC L		B03F2		1-03 *	P						2		0-7/8		121
DC L		B04F2		1-04 *							1		4-3/8		121
DC L		C03N1		1-05 *	P						2		0-7/8		121
DC L		C04N1		1-06 *	P						1		0-7/8		121
DC L		C05N1		1-07 *	P						2		0-7/8		121
DC L		C06N1		1-08 *	P						1		0-7/8		121
DC L		C07N1		1-09 *	P						2		0-7/8		121
DC I		C08N1		1-10 *	P						1		0-7/8		121
DC I		C09N1		1-11 *							2		5-3/8		121
DC L		B05F2		1-12 *	P						1		0-7/8		121
DC L		B06F2		1-13 *	P						2		0-7/8		121
DC L		B07F2		1-14 *	P						1		0-7/8		121
DC L		B08F2		1-15 *	P						2		0-7/8		121
DC L		B09F2		1-16 *	P										121
DC L				1									21-1/8		121
E BG IN		D05U2		1-01 *							1		3-7/8		122
E BG IN		F05B1		1-02 *											122
E BG IN				1									3-7/8		122
E BG OUT		D05V2		1-01 *							1		3-7/8		123
E BG OUT		F05A1		1-02 *											123
E BG OUT				1									3-7/8		123
E BR OUT		D05J2		1-01 *							1		6-5/8		124
E BR OUT		F05P1		1-02 *							2		1		124
E BR OUT		F05U2		1-03 *											124
E BR OUT				1									7-5/8		124
E IN		D05H1		1-01 *							1		3-3/8		125
E IN		E05M1		1-02 *											125
E IN				1									3-3/8		125
E INT A		D05N1		1-01 *							1		6-3/8		126
E INT A		F05U1		1-02 *											126
E INT A				1									6-3/8		126
E INT B		C05J1		1-01 *							1		8-5/8		127
E INT B		F05K2		1-02 *											127
E INT B				1									8-5/8		127
E INT ENB A		D05M1		1-01 *							1		6-5/8		128
E INT ENB A		F05V1		1-02 *											128
E INT ENB A				1									6-5/8		128
E INT ENB B		C05L1		1-01 *							1		8-1/8		129
E INT ENB B		F05H2		1-02 *											129
E INT ENB B				1									8-1/8		129
E OUT HIGH		D05K1		1-01 *							1		3-3/8		130
E OUT HIGH		E05M2		1-02 *											130
E OUT HIGH				1									3-3/8		130

RUN NAME	A/P	PIN NAME	ORDER PIN	BAY - ORDER	Q	DRAW OPT	RV	RG	Y	X	Z	REMARKS	NC LENGTH FLAG	EXCEPTIONS	RUN NUMBER
E OUT LOW		D05D1		1-01 *							1		3-7/8		131
E OUT LOW		E05N1		1-02 *											131
E OUT LOW				1									3-7/8		131
E SEL 0		D05F1		1-01 *							1		4-1/8		132
E SEL 0		E05S2		1-02 *											132
E SEL 0				1									4-1/8		132
E SEL 4		D05E1		1-01 *							1		4-3/8		133
E SEL 4		E05R2		1-02 *											133
E SEL 4				1									4-3/8		133
E SEL 6		D05C1		1-01 *							1		4-3/8		134
E SEL 6		E05S1		1-02 *											134
E SEL 6				1									4-3/8		134
E SER 2		D05J1		1-01 *							1		4-1/8		135
E SER 2		E05T2		1-02 *											135
E SER 2				1									4-1/8		135
E SSYN IN H		D05V1		1-01 *							1		0-7/8		136
E SSYN IN H		E05B1		1-02 *											136
E SSYN IN H				1									0-7/8		136
F BG IN		D06U2		1-01 *							1		3-7/8		137
F BG IN		F06B1		1-02 *											137
F BG IN				1									3-7/8		137
F BG OUT		D06V2		1-01 *							1		3-7/8		138
F BG OUT		F06A1		1-02 *											138
F BG OUT				1									3-7/8		138
F BR OUT		D06J2		1-01 *							1		6-5/8		139
F BR OUT		F06P1		1-02 *							2		1		139
F BR OUT		F06U2		1-03 *											139
F BR OUT				1									7-5/8		139
F IN		D06H1		1-01 *							1		3-3/8		140
F IN		E06M1		1-02 *											140
F IN				1									3-3/8		140
F INT A		D06N1		1-01 *							1		6-3/8		141
F INT A		F06U1		1-02 *											141
F INT A				1									6-3/8		141
F INT B		C06J1		1-01 *							1		8-5/8		142
F INT B		F06K2		1-02 *											142
F INT B				1									8-5/8		142
F INT ENB A		D06M1		1-01 *							1		6-5/8		143
F INT ENB A		F06V1		1-02 *											143
F INT ENB A				1									6-5/8		143
F INT ENB B		C06L1		1-01 *							1		8-1/8		144
F INT ENB B		F06H2		1-02 *											144
F INT ENB B				1									8-1/8		144

RUN NAME	A/P	PIN NAME	ORDER PIN	BAY - ORDER	Q	DRAW OPT	RV	RG	Y	X	Z	REMARKS	NC LENGTH FLAG	EXCEPTIONS	RUN NUMBER
F OUT HIGH		D06K1		1-01 *							1		3-3/8		145
F OUT HIGH		E06M2		1-02 *											145
F OUT HIGH				1									3-3/8		145
F OUT LOW		D06D1		1-01 *							1		3-7/8		146
F OUT LOW		E06N1		1-02 *											146
F OUT LOW				1									3-7/8		146
F SEL 0		D06F1		1-01 *							1		4-1/8		147
F SEL 0		E06S2		1-02 *											147
F SEL 0				1									4-1/8		147
F SEL 4		D06E1		1-01 *							1		4-3/8		148
F SEL 4		E06R2		1-02 *											148
F SEL 4				1									4-3/8		148
F SEL 6		D06C1		1-01 *							1		4-3/8		149
F SEL 6		E06S1		1-02 *											149
F SEL 6				1									4-3/8		149
F SER 2		D06J1		1-01 *							1		4-1/8		150
F SER 2		E06T2		1-02 *											150
F SER 2				1									4-1/8		150
F SSYN IN H		D06V1		1-01 *							1		0-7/8		151
F SSYN IN H		E06B1		1-02 *											151
F SSYN IN H				1									0-7/8		151
F03D2		F03D2		1-01 *							2		1-5/8		152
F03D2		F03R2		1-02 *							1		0-4/8		152
F03D2		F03N1		1-03 *											152
F03D2				1									2-1/8		152
F03E1		F03E1		1-01 *							1		2-3/8		153
F03E1		F03V2		1-02 *											153
F03E1				1									2-3/8		153
F03L2		F03L2		1-01 *							1		1		154
F03L2		F03R1		1-02 *											154
F03L2				1									1-0/8		154
F03M2		F03M2		1-01 *							1		1		155
F03M2		F03S1		1-02 *											155
F03M2				1									1-0/8		155
F03P2		F03P2		1-01 *							1		0-4/8		156
F03P2		F03S2		1-02 *											156
F03P2				1									0-4/8		156
F04D2		F04D2		1-01 *							2		1-5/8		157
F04D2		F04R2		1-02 *							1		0-4/8		157
F04D2		F04N1		1-03 *											157
F04D2				1									2-1/8		157

RUN NAME	A/P	PIN NAME	ORDER PIN	BAY - ORDER	Q	DRAW OPT	RV	RG	Y	X	Z	REMARKS	NC LENGTH FLAG	EXCEPTIONS	RUN NUMBER
F04E1		F04E1		1-01 *							1		2-3/8		158
F04E1		F04V2		1-02 *											158
F04E1				1									2-3/8		158
F04L2		F04L2		1-01 *							1		1		159
F04L2		F04R1		1-02 *											159
F04L2				1									1-0/8		159
F04M2		F04M2		1-01 *							1		1		160
F04M2		F04S1		1-02 *											160
F04M2				1									1-0/8		160
F04P2		F04P2		1-01 *							1		0-4/8		161
F04P2		F04S2		1-02 *											161
F04P2				1									0-4/8		161
F05D2		F05D2		1-01 *							2		1-5/8		162
F05D2		F05R2		1-02 *							1		0-4/8		162
F05D2		F05N1		1-03 *											162
F05D2				1									2-1/8		162
F05E1		F05E1		1-01 *							1		2-3/8		163
F05E1		F05V2		1-02 *											163
F05E1				1									2-3/8		163
F05L2		F05L2		1-01 *							1		1		164
F05L2		F05R1		1-02 *											164
F05L2				1									1-0/8		164
F05M2		F05M2		1-01 *							1		1		165
F05M2		F05S1		1-02 *											165
F05M2				1									1-0/8		165
F05P2		F05P2		1-01 *							1		0-4/8		166
F05P2		F05S2		1-02 *											166
F05P2				1									0-4/8		166
F06D2		F06D2		1-01 *							2		1-5/8		167
F06D2		F06R2		1-02 *							1		0-4/8		167
F06D2		F06N1		1-03 *											167
F06D2				1									2-1/8		167
F06E1		F06E1		1-01 *							1		2-3/8		168
F06E1		F06V2		1-02 *											168
F06E1				1									2-3/8		168
F06L2		F06L2		1-01 *							1		1		169
F06L2		F06R1		1-02 *											169
F06L2				1									1-0/8		169
F06M2		F06M2		1-01 *							1		1		170
F06M2		F06S1		1-02 *											170
F06M2				1									1-0/8		170

RUN NAME	A/P	PIN NAME	ORDER PIN	BAY - ORDER	Q	DRAW OPT	RV	RG	Y	X	Z	REMARKS	NC LENGTH FLAG	EXCEPTIONS	RUN NUMBER
F06P2		F06P2		1-01 *							1		0-4/8		171
F06P2		F06S2		1-02 *											171
F06P2				1									0-4/8		171
F07D2		F07D2		1-01 *							2		1-5/8		172
F07D2		F07R2		1-02 *							1		0-4/8		172
F07D2		F07N1		1-03 *											172
F07D2				1									2-1/8		172
F07E1		F07E1		1-01 *							1		2-3/8		173
F07E1		F07V2		1-02 *											173
F07E1				1									2-3/8		173
F07L2		F07L2		1-01 *							1		1		174
F07L2		F07R1		1-02 *											174
F07L2				1									1-0/8		174
F07M2		F07M2		1-01 *							1		1		175
F07M2		F07S1		1-02 *											175
F07M2				1									1-0/8		175
F07P2		F07P2		1-01 *							1		0-4/8		176
F07P2		F07S2		1-02 *											176
F07P2				1									0-4/8		176
F08D2		F08D2		1-01 *							2		1-5/8		177
F08D2		F08R2		1-02 *							1		0-4/8		177
F08D2		F08N1		1-03 *											177
F08D2				1									2-1/8		177
F08E1		F08E1		1-01 *							1		2-3/8		178
F08E1		F08V2		1-02 *											178
F08E1				1									2-3/8		178
F08L2		F08L2		1-01 *							1		1		179
F08L2		F08R1		1-02 *											179
F08L2				1									1-0/8		179
F08M2		F08M2		1-01 *							1		1		180
F08M2		F08S1		1-02 *											180
F08M2				1									1-0/8		180
F08P2		F08P2		1-01 *							1		0-4/8		181
F08P2		F08S2		1-02 *											181
F08P2				1									0-4/8		181
F09D2		F09D2		1-01 *							2		1-5/8		182
F09D2		F09R2		1-02 *							1		0-4/8		182
F09D2		F09N1		1-03 *											182
F09D2				1									2-1/8		182
F09E1		F09E1		1-01 *							1		2-3/8		183
F09E1		F09V2		1-02 *											183
F09E1				1									2-3/8		183

RUN NAME	A/P	PIN NAME	ORDER PIN	BAY - ORDER	Q	DRAW OPT	RV	RG	Y	X	Z	REMARKS	NC FLAG	LENGTH	EXCEPTIONS	RUN NUMBER
F09L2		F09L2		1-01 *							1			1		184
F09L2		F09R1		1-02 *												184
F09L2				1										1-0/8		184
F09M2		F09M2		1-01 *							1			1		185
F09M2		F09S1		1-02 *												185
F09M2				1										1-0/8		185
F09P2		F09P2		1-01 *							1			0-4/8		186
F09P2		F09S2		1-02 *												186
F09P2				1										0-4/8		186
GND (01)		A01C2		1-01 *	P						1			0-7/8		187
GND (01)		A02C2		1-02 *	P						2			0-7/8		187
GND (01)		A03C2		1-03 *	P						1			0-7/8		187
GND (01)		A04C2		1-04 *	P						2			0-7/8		187
GND (01)		A05C2		1-05 *	P						1			0-7/8		187
GND (01)		A06C2		1-06 *	P						2			0-7/8		187
GND (01)		A07C2		1-07 *	P						1			0-7/8		187
GND (01)		A08C2		1-08 *	P						2			0-7/8		187
GND (01)		A09C2		1-09 *	P						1			2-1/8		187
GND (01)		A09T1		1-10 *	P						2			0-7/8		187
GND (01)		A08T1		1-11 *	P						1			0-7/8		187
GND (01)		A07T1		1-12 *	P						2			0-7/8		187
GND (01)		A06T1		1-13 *	P						1			0-7/8		187
GND (01)		A05T1		1-14 *	P						2			0-7/8		187
GND (01)		A04T1		1-15 *	P						1			0-7/8		187
GND (01)		A03T1		1-16 *	P						2			0-7/8		187
GND (01)		A02T1		1-17 *	P						1			0-7/8		187
GND (01)		A01T1		1-18 *	P						2			1-5/8		187
GND (01)		B01C2		1-19 *	P						1			0-7/8		187
GND (01)		B02C2		1-20 *	P						2			0-7/8		187
GND (01)		B03C2		1-21 *	P						1			0-7/8		187
GND (01)		B04C2		1-22 *	P						2			0-7/8		187
GND (01)		B05C2		1-23 *	P						1			0-7/8		187
GND (01)		B06C2		1-24 *	P						2			0-7/8		187
GND (01)		B07C2		1-25 *	P						1			0-7/8		187
GND (01)		B08C2		1-26 *	P						2			0-7/8		187
GND (01)		B09C2		1-27 *	P						1			2-1/8		187
GND (01)		B09T1		1-28 *	P						2			0-7/8		187
GND (01)		B08T1		1-29 *	P						1			0-7/8		187
GND (01)		B07T1		1-30 *	P						2			0-7/8		187
GND (01)		B06T1		1-31 *	P						1			0-7/8		187
GND (01)		B05T1		1-32 *	P						2			0-7/8		187
GND (01)		B04T1		1-33 *	P						1			0-7/8		187
GND (01)		B03T1		1-34 *	P						2			0-7/8		187
GND (01)		B02T1		1-35 *	P						1			0-7/8		187
GND (01)		B01T1		1-36 *	P						2			1-3/8		187
GND (01)		C01C2		1-37 *	P						1			0-7/8		187
GND (01)		C02C2		1-38 *	P						2			0-7/8		187
GND (01)		C03C2		1-39 *	P						1			0-7/8		187
GND (01)		C04C2		1-40 *	P						2			0-7/8		187
GND (01)		C05C2		1-41 *	P						1			0-7/8		187
GND (01)		C06C2		1-42 *	P						2			0-7/8		187
GND (01)		C07C2		1-43 *	P						1			0-7/8		187
GND (01)		C08C2		1-44 *	P						2			0-7/8		187

RUN NAME	A/P	PIN NAME	ORDER PIN	BAY - ORDER	Q	DRAW OPT	RV	RG	Y	X	Z	REMARKS	NC LENGTH FLAG	EXCEPTIONS	RUN NUMBER
GND (01)		C09C2		1-45 *	P						1		2-1/8		187
GND (01)		C09T1		1-46 *	P						2		0-7/8		187
GND (01)		C08T1		1-47 *	P						1		0-7/8		187
GND (01)		C07T1		1-48 *	P						2		0-7/8		187
GND (01)		C06T1		1-49 *	P						1		0-7/8		187
GND (01)		C05T1		1-50 *	P						2		0-7/8		187
GND (01)		C04T1		1-51 *	P						1		0-7/8		187
GND (01)		C03T1		1-52 *	P						2		0-7/8		187
GND (01)		C02T1		1-53 *	P						1		0-7/8		187
GND (01)		C01T1		1-54 *	P										187
GND (01)				1									51-3/8		187
GND (02)		D01C2		1-01 *	P						1		0-7/8		188
GND (02)		D02C2		1-02 *	P						2		0-7/8		188
GND (02)		D03C2		1-03 *	P						1		0-7/8		188
GND (02)		D04C2		1-04 *	P						2		0-7/8		188
GND (02)		D05C2		1-05 *	P						1		0-7/8		188
GND (02)		D06C2		1-06 *	P						2		0-7/8		188
GND (02)		D07C2		1-07 *	P						1		0-7/8		188
GND (02)		D08C2		1-08 *	P						2		0-7/8		188
GND (02)		D09C2		1-09 *	P						1		2-1/8		188
GND (02)		D09T1		1-10 *	P						2		0-7/8		188
GND (02)		D08T1		1-11 *	P						1		0-7/8		188
GND (02)		D07T1		1-12 *	P						2		0-7/8		188
GND (02)		D06T1		1-13 *	P						1		0-7/8		188
GND (02)		D05T1		1-14 *	P						2		0-7/8		188
GND (02)		D04T1		1-15 *	P						1		0-7/8		188
GND (02)		D03T1		1-16 *	P						2		0-7/8		188
GND (02)		D02T1		1-17 *	P						1		0-7/8		188
GND (02)		D01T1		1-18 *	P						2		1-3/8		188
GND (02)		E01C2		1-19 *	P						1		0-7/8		188
GND (02)		E02C2		1-20 *	P						2		0-7/8		188
GND (02)		E03C2		1-21 *	P						1		0-7/8		188
GND (02)		E04C2		1-22 *	P						2		0-7/8		188
GND (02)		E05C2		1-23 *	P						1		0-7/8		188
GND (02)		E06C2		1-24 *	P						2		0-7/8		188
GND (02)		E07C2		1-25 *	P						1		0-7/8		188
GND (02)		E08C2		1-26 *	P						2		0-7/8		188
GND (02)		E09C2		1-27 *	P						1		2-1/8		188
GND (02)		E09T1		1-28 *	P						2		0-7/8		188
GND (02)		E08T1		1-29 *	P						1		0-7/8		188
GND (02)		E07T1		1-30 *	P						2		0-7/8		188
GND (02)		E06T1		1-31 *	P						1		0-7/8		188
GND (02)		E05T1		1-32 *	P						2		0-7/8		188
GND (02)		E04T1		1-33 *	P						1		0-7/8		188
GND (02)		E03T1		1-34 *	P						2		0-7/8		188
GND (02)		E02T1		1-35 *	P						1		0-7/8		188
GND (02)		E01T1		1-36 *	P						2		1-5/8		188
GND (02)		F01C2		1-37 *	P						1		0-7/8		188
GND (02)		F02C2		1-38 *	P						2		0-7/8		188
GND (02)		F03C2		1-39 *	P						1		0-7/8		188
GND (02)		F04C2		1-40 *	P						2		0-7/8		188
GND (02)		F05C2		1-41 *	P						1		0-7/8		188
GND (02)		F06C2		1-42 *	P						2		0-7/8		188
GND (02)		F07C2		1-43 *	P						1		0-7/8		188
GND (02)		F08C2		1-44 *	P						2		0-7/8		188

RUN NAME	A/P	PIN NAME	ORDER PIN	BAY - ORDER	Q	DRAW OPT	RV	RG	Y	X	Z	REMARKS	NC LENGTH FLAG	EXCEPTIONS	RUN NUMBER
GND (02)		F09C2		1-45 *	P						1		2-1/8		188
GND (02)		F09T1		1-46 *	P						2		0-7/8		188
GND (02)		F08T1		1-47 *	P						1		0-7/8		188
GND (02)		F07T1		1-48 *	P						2		0-7/8		188
GND (02)		F06T1		1-49 *	P						1		0-7/8		188
GND (02)		F05T1		1-50 *	P						2		0-7/8		188
GND (02)		F04T1		1-51 *	P						1		0-7/8		188
GND (02)		F03T1		1-52 *	P						2		0-7/8		188
GND (02)		F02T1		1-53 *	P						1		0-7/8		188
GND (02)		F01T1		1-54 *	P										188
GND (02)				1									51-3/8		188
GND (03)		B09V2		1-01 *	P						2		2-3/8		189
GND (03)		B09E1		1-02 *	P						1		0-2/8		189
GND (03)		B09D1		1-03 *	P						2		0-4/8		189
GND (03)		B09B2		1-04 *	P						1		1-1/8		189
GND (03)		A09V2		1-05 *	P						2		0-6/8		189
GND (03)		A09S1		1-06 *	P						1		0-2/8		189
GND (03)		A09R1		1-07 *	P						2		0-2/8		189
GND (03)		A09P1		1-08 *	P						1		0-2/8		189
GND (03)		A09N1		1-09 *	P						2		1-7/8		189
GND (03)		A09B2		1-10 *	P						1		4-3/8		189
GND (03)		A01B2		1-11 *	P						2		1-7/8		189
GND (03)		A01N1		1-12 *	P						1		0-2/8		189
GND (03)		A01P1		1-13 *	P						2		0-2/8		189
GND (03)		A01R1		1-14 *	P						1		0-2/8		189
GND (03)		A01S1		1-15 *	P						2		0-6/8		189
GND (03)		A01V2		1-16 *	P						1		1-1/8		189
GND (03)		B01B2		1-17 *	P						2		0-4/8		189
GND (03)		B01D1		1-18 *	P						1		0-2/8		189
GND (03)		B01E1		1-19 *	P						2		2-3/8		189
GND (03)		F01V2		1-20 *	P						1		6-5/8		189
GND (03)		E03A1		1-21 *	P						2		0-7/8		189
GND (03)		E04A1		1-22 *	P						1		0-7/8		189
GND (03)		E05A1		1-23 *	P						2		0-7/8		189
GND (03)		E06A1		1-24 *	P						1		0-7/8		189
GND (03)		E07A1		1-25 *	P						2		0-7/8		189
GND (03)		E08A1		1-26 *	P						1		0-7/8		189
GND (03)		E09A1		1-27 *	P						2		4-3/8		189
GND (03)		F09J2		1-28 *	P						1		0-7/8		189
GND (03)		F08J2		1-29 *	P						2		0-7/8		189
GND (03)		F07J2		1-30 *	P						1		0-7/8		189
GND (03)		F06J2		1-31 *	P						2		0-7/8		189
GND (03)		F05J2		1-32 *	P						1		0-7/8		189
GND (03)		F04J2		1-33 *	P						2		0-7/8		189
GND (03)		F03J2		1-34 *	P										189
GND (03)				1									41-1/8		189
H BG IN		L07U2		1-01 *							1		3-7/8		190
H BG IN		F07B1		1-02 *											190
H BG IN				1									3-7/8		190
H BG OUT		L07V2		1-01 *							1		3-7/8		191
H BG OUT		F07A1		1-02 *											191
H BG OUT				1									3-7/8		191

RUN NAME	A/P	PIN NAME	ORDER PIN	BAY - ORDER	Q	DRAW OPT	RV	RG	Y	X	Z	REMARKS	NC FLAG	LENGTH	EXCEPTIONS	RUN NUMBER
H BR OUT		D07J2		1-01 *							1			6-5/8		192
H BR OUT		F07P1		1-02 *							2			1		192
H BR OUT		F07U2		1-03 *												192
H BR OUT				1										7-5/8		192
H IN		D07H1		1-01 *							1			3-3/8		193
H IN		E07M1		1-02 *												193
H IN				1										3-3/8		193
H INT A		D07N1		1-01 *							1			6-3/8		194
H INT A		F07U1		1-02 *												194
H INT A				1										6-3/8		194
H INT B		C07J1		1-01 *							1			8-5/8		195
H INT B		F07K2		1-02 *												195
H INT B				1										8-5/8		195
H INT ENB A		D07M1		1-01 *							1			6-5/8		196
H INT ENB A		F07V1		1-02 *												196
H INT ENB A				1										6-5/8		196
H INT ENB B		C07L1		1-01 *							1			8-1/8		197
H INT ENB B		F07H2		1-02 *												197
H INT ENB B				1										8-1/8		197
H OUT HIGH		D07K1		1-01 *							1			3-3/8		198
H OUT HIGH		E07M2		1-02 *												198
H OUT HIGH				1										3-3/8		198
H OUT LOW		D07D1		1-01 *							1			3-7/8		199
H OUT LOW		E07N1		1-02 *												199
H OUT LOW				1										3-7/8		199
H SEL 0		D07F1		1-01 *							1			4-1/8		200
H SEL 0		E07S2		1-02 *												200
H SEL 0				1										4-1/8		200
H SEL 4		D07E1		1-01							1			4-3/8		201
H SEL 4		E07R2		1-02 *												201
H SEL 4				1										4-3/8		201
H SEL 6		D07C1		1-01 *							1			4-3/8		202
H SEL 6		E07S1		1-02 *												202
H SEL 6				1										4-3/8		202
H SER 2		D07J1		1-01 *							1			4-1/8		203
H SER 2		E07T2		1-02 *												203
H SER 2				1										4-1/8		203
H SSYN IN H		D07V1		1-01 *							1			0-7/8		204
H SSYN IN H		E07B1		1-02 *												204
H SSYN IN H				1										0-7/8		204

RUN NAME	A/P	PIN NAME	ORDER PIN	BAY - ORDER	Q	DRAW OPT	RV	RG	Y	X	Z	REMARKS	NC LENGTH FLAG	EXCEPTIONS	RUN NUMBER
HALT GRANT		C01R1		1-01 *	P						2		0-7/8		205
HALT GRANT		C02R1		1-02 *	P						1		0-7/8		205
HALT GRANT		C03R1		1-03 *	P						2		0-7/8		205
HALT GRANT		C04R1		1-04 *	P						1		0-7/8		205
HALT GRANT		C05R1		1-05 *	P						2		0-7/8		205
HALT GRANT		C06R1		1-06 *	P						1		0-7/8		205
HALT GRANT		C07R1		1-07 *	P						2		0-7/8		205
HALT GRANT		C08R1		1-08 *	P						1		0-7/8		205
HALT GRANT		C09R1		1-09 *	P										205
HALT GRANT				1									7-0/8		205
HALT REQ		C01P1		1-01 *	P						2		0-7/8		206
HALT REQ		C02P1		1-02 *	P						1		0-7/8		206
HALT REQ		C03P1		1-03 *	P						2		0-7/8		206
HALT REQ		C04P1		1-04 *	P						1		0-7/8		206
HALT REQ		C05P1		1-05 *	P						2		0-7/8		206
HALT REQ		C06P1		1-06 *	P						1		0-7/8		206
HALT REQ		C07P1		1-07 *	P						2		0-7/8		206
HALT REQ		C08P1		1-08 *	P						1		0-7/8		206
HALT REQ		C09P1		1-09 *	P										206
HALT REQ				1									7-0/8		206
INIT L		A01A1		1-01 *	P						1		0-7/8		207
INIT L		A02A1		1-02 *	P						2		0-7/8		207
INIT L		A03A1	A04A1	1-03 *	P						1		0-7/8		207
INIT L		A04A1		1-04 *	H						2	TWPR	9-7/8		207
INIT L		D03L1		1-05 *	P						1		0-7/8		207
INIT L		D04L1		1-06 *	P						2		0-7/8		207
INIT L		D05L1		1-07 *	P						1		0-7/8		207
INIT L		D06L1		1-08 *	P						2		0-7/8		207
INIT L		D07L1		1-09 *	P						1		0-7/8		207
INIT L		D08L1	D09L1	1-10 *	P						2		0-7/8		207
INIT L		D09L1		1-11 *	H						1	TWPR	11-5/8		207
INIT L		A05A1		1-12 *	P						2		0-7/8		207
INIT L		A06A1		1-13 *	P						1		0-7/8		207
INIT L		A07A1		1-14 *	P						2		0-7/8		207
INIT L		A08A1		1-15 *	P						1		0-7/8		207
INIT L		A09A1		1-16 *	P										207
INIT L				1									32-7/8		207
INT SSYN		B02E1		1-01 *	P						2		0-7/8		208
INT SSYN		B03E1		1-02 *	P						1		0-7/8		208
INT SSYN		B04E1		1-03 *	P						2		0-7/8		208
INT SSYN		B05E1		1-04 *	P						1		0-7/8		208
INT SSYN		B06E1		1-05 *	P						2		0-7/8		208
INT SSYN		B07E1		1-06 *	P						1		0-7/8		208
INT SSYN		B08E1		1-07 *	P										208
INT SSYN				1									5-2/8		208

RUN NAME	A/P	PIN NAME	ORDER PIN	BAY - ORDER	Q	DRAW OPT	RV	RG	Y	X	Z	REMARKS	NC LENGTH FLAG	EXCEPTIONS	RUN NUMBER
INTR L		A01B1		1-01 *	P						2		0-7/8		209
INTR L		A02B1		1-02 *	P						1		0-7/8		209
INTR L		A03B1		1-03 *	P						2		0-7/8		209
INTR L		A04B1		1-04 *							1		15-3/8		209
INTR L		F03M1		1-05 *	P						2		0-7/8		209
INTR L		F04M1		1-06 *							1		0-7/8		209
INTR L		F05M1		1-07 *	P						2		0-7/8		209
INTR L		F06M1		1-08 *	P						1		0-7/8		209
INTR L		F07M1		1-09 *	P						2		0-7/8		209
INTR L		F08M1		1-10 *	P						1		0-7/8		209
INTR L		F09M1		1-11 *							2		16-5/8		209
INTR L		A05B1		1-12 *	P						1		0-7/8		209
INTR L		A06B1		1-13 *	P						2		0-7/8		209
INTR L		A07B1		1-14 *	P						1		0-7/8		209
INTR L		A08B1		1-15 *	P						2		0-7/8		209
INTR L		A09B1		1-16 *	P										209
INTR L				1									43-3/8		209
J A IN		D08H1		1-01 *							1		3-3/8		210
J A IN		E08M1		1-02 *											210
J A IN				1									3-3/8		210
J BG IN		D08U2		1-01 *							1		3-7/8		211
J BG IN		F08B1		1-02 *											211
J BG IN				1									3-7/8		211
J BG OUT		D08V2		1-01 *							1		3-7/8		212
J BG OUT		F08A1		1-02 *											212
J BG OUT				1									3-7/8		212
J BR OUT		D08J2		1-01 *							1		6-5/8		213
J BR OUT		F08P1		1-02 *							2		1		213
J BR OUT		F08U2		1-03 *											213
J BR OUT				1									7-5/8		213
J INT A		D08N1		1-01 *							1		6-3/8		214
J INT A		F08U1		1-02 *											214
J INT A				1									6-3/8		214
J INT B		C08J1		1-01 *							1		8-5/8		215
J INT B		F08K2		1-02 *											215
J INT B				1									8-5/8		215
J INT ENB A		D08M1		1-01 *							1		6-5/8		216
J INT ENB A		F08V1		1-02 *											216
J INT ENB A				1									6-5/8		216
J INT ENB B		C08L1		1-01 *							1		8-1/8		217
J INT ENB B		F08H2		1-02 *											217
J INT ENB B				1									8-1/8		217
J OUT HIGH		D08K1		1-01 *							1		3-3/8		218
J OUT HIGH		E08M2		1-02 *											218
J OUT HIGH				1									3-3/8		218

RUN NAME	A/P	PIN NAME	ORDER PIN	BAY - ORDER	Q	DRAW OPT	RV	RG	Y	X	Z	REMARKS	NC LENGTH FLAG	EXCEPTIONS	RUN NUMBER
J OUT LOW		D08D1		1-01 *							1		3-7/8		219
J OUT LOW		E08N1		1-02 *											219
J OUT LOW				1									3-7/8		219
J SEL 0		D08F1		1-01 *							1		4-1/8		220
J SEL 0		E08S2		1-02 *											220
J SEL 0				1									4-1/8		220
J SEL 4		D08E1		1-01 *							1		4-3/8		221
J SEL 4		E08R2		1-02 *											221
J SEL 4				1									4-3/8		221
J SEL 6		D08C1		1-01 *							1		4-3/8		222
J SEL 6		E08S1		1-02 *											222
J SEL 6				1									4-3/8		222
J SER 2		D08J1		1-01 *							1		4-1/8		223
J SER 2		E08T2		1-02 *											223
J SER 2				1									4-1/8		223
J SSYN IN H		D08V1		1-01 *							1		0-7/8		224
J SSYN IN H		E08B1		1-02 *											224
J SSYN IN H				1									0-7/8		224
K A IN		D09H1		1-01 *							1		3-3/8		225
K A IN		E09M1		1-02 *											225
K A IN				1									3-3/8		225
K BG IN		D09U2		1-01 *							1		3-7/8		226
K BG IN		F09B1		1-02 *											226
K BG IN				1									3-7/8		226
K BG OUT		D09V2		1-01 *							1		3-7/8		227
K BG OUT		F09A1		1-02 *											227
K BG OUT				1									3-7/8		227
K BR OUT		D09J2		1-01 *							1		6-5/8		228
K BR OUT		F09P1		1-02 *							2		1		228
K BR OUT		F09U2		-03 *											228
K BR OUT				1									7-5/8		228
K INT A		D09N1		1-01 *							1		6-3/8		229
K INT A		F09U1		1-02 *											229
K INT A				1									6-3/8		229
K INT B		C09J1		1-01 *							1		8-5/8		230
K INT B		F09K2		1-02 *											230
K INT B				1									8-5/8		230
K INT ENB A		D09M1		1-01 *							1		6-5/8		231
K INT ENB A		F09V1		1-02 *											231
K INT ENB A				1									6-5/8		231
K INT ENB B		C09L1		1-01 *							1		8-1/8		232
K INT ENB B		F09H2		1-02 *											232
K INT ENB B				1									8-1/8		232

RUN NAME	A/P	PIN NAME	ORDER PIN	BAY - ORDER	Q	DRAW OPT	RV	RG	Y	X	Z	REMARKS	NC LENGTH	EXCEPTIONS	RUN NUMBER
K OUT HIGH		D09K1		1-01 *							1		3-3/8		233
K OUT HIGH		E09M2		1-02 *											233
K OUT HIGH				1									3-3/8		233
K OUT LOW		D09D1		1-01 *							1		3-7/8		234
K OUT LOW		E09N1		1-02 *											234
K OUT LOW				1									3-7/8		234
K SEL 0		D09F1		1-01 *							1		4-1/8		235
K SEL 0		E09S2		1-02 *											235
K SEL 0				1									4-1/8		235
K SEL 4		D09E1		1-01 *							1		4-3/8		236
K SEL 4		E09R2		1-02 *											236
K SEL 4				1									4-3/8		236
K SEL 6		D09C1		1-01 *							1		4-3/8		237
K SEL 6		E09S1		1-02 *											237
K SEL 6				1									4-3/8		237
K SER 2		D09J1		1-01 *							1		4-1/8		238
K SER 2		E09T2		1-02 *											238
K SER 2				1									4-1/8		238
K SSYN IN H		D09V1		1-01 *							1		0-7/8		239
K SSYN IN H		E09B1		1-02 *											239
K SSYN IN H				1									0-7/8		239
K1-1 BERG 00(1) H		D01N1		1-01 *							1		0-5/8		240
K1-1 BERG 00(1) H		D02M1		1-02 *											240
K1-1 BERG 00(1) H				1									0-5/8		240
K1-1 BXREG 00(1) H		C02U1		1-01 *							1		7-7/8		241
K1-1 BXREG 00(1) H		F01K1		1-02 *											241
K1-1 BXREG 00(1) H				1									7-7/8		241
K1-1 BXREG 01(1) H		D02F1		1-01 *							1		5-5/8		242
K1-1 BXREG 01(1) H		F01A1		1-02 *											242
K1-1 BXREG 01(1) H				1									5-5/8		242
K1-1 CBIT(1) H		D01U2		1-01 *							1		6-6/8		243
K1-1 CBIT(1) H		D02V1		1-02 *											243
K1-1 CBIT(1) H				1									6-6/8		243
K1-1 NBIT(1) H		D01L1		1-01 *							1		3-7/8		244
K1-1 NBIT(1) H		E02P2		1-02 *											244
K1-1 NBIT(1) H				1									3-7/8		244
K1-1 SSMUX 00 H		E02B2		1-01 *							1		4-3/8		245
K1-1 SSMUX 00 H		F01F1		1-02 *											245
K1-1 SSMUX 00 H				1									4-3/8		245
K1-1 SSMUX 01 H		D01H1		1-01 *							1		3-1/8		246
K1-1 SSMUX 01 H		E02E1		1-02 *											246
K1-1 SSMUX 01 H				1									3-1/8		246

RUN NAME	A/P	PIN NAME	ORDER PIN	BAY - ORDER	Q	DRAW OPT	SG I	X	Z	REMARKS	NC LENGTH FLAG	EXCEPTIONS	RUN NUMBER
K1-1 SSMUX 02 H		E01B1		1-01 *					1		1-3/8		247
K1-1 SSMUX 02 H		E02D2		1-02 *									247
K1-1 SSMUX 02 H				1							1-3/8		247
K1-1 SSMUX 03 H		D01E1		1-01 *					1		3-3/8		248
K1-1 SSMUX 03 H		E02D1		1-02 *									248
K1-1 SSMUX 03 H				1							3-3/8		248
K1-1 VBIT(1) H		E01D1		1-01 *					1		2-5/8		249
K1-1 VBIT(1) H		E02U2		1-02 *									249
K1-1 VBIT(1) H				1							2-5/8		249
K1-1 ZBIT(1) H		E02V1		1-01 *					1		1-7/8		250
K1-1 ZBIT(1) H		F01F2		1-02 *									250
K1-1 ZBIT(1) H				1							1-7/8		250
K1-10 8-15-0 L		C01J2		1-01 *					1		9-3/8		251
K1-10 8-15-0 L		F02N2		1-02 *									251
K1-10 8-15-0 L				1							9-3/8		251
K1-10 ASSERT SSYN H		E01K2		1-01 *					1		3-1/8		252
K1-10 ASSERT SSYN H		F02F1		1-02 *									252
K1-10 ASSERT SSYN H				1							3-1/8		252
K1-10 CCN H		F01T2		1-01 *					1		1-7/8		253
K1-10 CCN H		F02J2		1-02 *									253
K1-10 CCN H				1							1-7/8		253
K1-10 CCZ H		E01L1		1-01 *					1		2-7/8		254
K1-10 CCZ H		F02B2		1-02 *									254
K1-10 CCZ H				1							2-7/8		254
K1-2 PSW 05(1) H		C01P2		1-01 *					1		6-5/8		255
K1-2 PSW 05(1) H		E02T2		1-02 *									255
K1-2 PSW 05(1) H				1							6-5/8		255
K1-2 PSW 06(1) H		C01M2		1-01 *					1		6-5/8		256
K1-2 PSW 06(1) H		E02U1		1-02 *									256
K1-2 PSW 06(1) H				1							6-5/8		256
K1-2 PSW 07(1) H		E02K2		1-01 *					1		3-3/8		257
K1-2 PSW 07(1) H		F01H2		1-02 *									257
K1-2 PSW 07(1) H				1							3-3/8		257
K1-2 SSMUX 04 H		C02D1		1-01 *					1		3-7/8		258
K1-2 SSMUX 04 H		D01H2		1-02 *									258
K1-2 SSMUX 04 H				1							3-7/8		258
K1-2 SSMUX 05 H		E01E1		1-01 *					1		1-3/8		259
K1-2 SSMUX 05 H		E02H2		1-02 *									259
K1-2 SSMUX 05 H				1							1-3/8		259
K1-2 SSMUX 06 H		C02C1		1-01 *					1		6-7/8		260
K1-2 SSMUX 06 H		E01K1		1-02 *									260
K1-2 SSMUX 06 H				1							6-7/8		260

RUN NAME	A/P	PIN NAME	ORDER PIN	BAY - ORDEP	Q	DRAW OPT	RV	RG	Y	X	Z	REMARKS	NC LENGTH FLAG	EXCEPTIONS	RUN NUMBER
K1-2 SSMUX 07 H		C02E2		1-01 *							1		3-7/8		261
K1-2 SSMUX 07 H		D01J2		1-02 *											261
K1-2 SSMUX 07 H				1									3-7/8		261
K1-2 TBIT(1) H		D01F1		1-01 *							1		0-6/8		262
K1-2 TBIT(1) H		D02K1		1-02 *											262
K1-2 TBIT(1) H				1									0-6/8		262
K1-3 SSMUX 08 H		E01N2		1-01 *							1		0-4/8		263
K1-3 SSMUX 08 H		E02N1		1-02 *											263
K1-3 SSMUX 08 H				1									0-4/8		263
K1-3 SSMUX 09 H		C02J2		1-01 *							1		6-5/8		264
K1-3 SSMUX 09 H		E01M2		1-02 *											264
K1-3 SSMUX 09 H				1									6-5/8		264
K1-3 SSMUX 10 H		C02H2		1-01 *							1		5-1/8		265
K1-3 SSMUX 10 H		D01V1		1-02 *											265
K1-3 SSMUX 10 H				1									5-1/8		265
K1-3 SSMUX 11 H		C02F2		1-01 *							1		5-7/8		266
K1-3 SSMUX 11 H		E01A1		1-02 *											266
K1-3 SSMUX 11 H				1									5-7/8		266
K1-4 ALU COUT H		E01V1		1-01 *							1		2-7/8		267
K1-4 ALU COUT H		F02L2		1-02 *											267
K1-4 ALU COUT H				1									2-7/8		267
K1-4 PSW 15(1) L		D01J1		1-01 *							1		3-1/8		268
K1-4 PSW 15(1) L		E02E2		1-02 *											268
K1-4 PSW 15(1) L				1									3-1/8		268
K1-4 SP15(1) H		C02N1		1-01 *		H					1	TWP	8-1/8		269
K1-4 SP15(1) H		F01E1		1-02 *		X						TWP			269
K1-4 SP15(1) H				1									8-1/8		269
K1-4 SSMUX 12 H		C02J1		1-01 *							1		5-1/8		270
K1-4 SSMUX 12 H		E01B2		1-02 *											270
K1-4 SSMUX 12 H				1									5-1/8		270
K1-4 SSMUX 13 H		C02D2		1-01 *							1		5-3/8		271
K1-4 SSMUX 13 H		D01V1		1-02 *											271
K1-4 SSMUX 13 H				1									5-3/8		271
K1-4 SSMUX 14 H		C02H1		1-01 *							1		6-5/8		272
K1-4 SSMUX 14 H		E01P2		1-02 *											272
K1-4 SSMUX 14 H				1									6-5/8		272
K1-4 SSMUX 15 H		C01D1		1-01 *							1		1-3/8		273
K1-4 SSMUX 15 H		C02B2		1-02 *											273
K1-4 SSMUX 15 H				1									1-3/8		273
K1-5 ALLOW MSYN H		F01V2		1-01 *							1		1-1/		274
K1-5 ALLOW MSYN H		[illegible]2A1		1-02 *											274
K1-5 ALLOW MSYN H				1									1-1/8		274

RUN NAME	A/P	PIN NAME	ORDER PIN	BAY - ORDER	Q	DRAW OPT	RV	RG	Y	X	Z	REMARKS	NC LENGTH FLAG	EXCEPTIONS	RUN NUMBER
K1-5 MAN CLK ENAB L		F01M1		1-01 *							1		1-2/8		275
K1-5 MAN CLK ENAB L		F02E1		1-02 *											275
K1-5 MAN CLK ENAB L				1									1-2/8		275
K1-5 MAN CLK L		E02S1		1-01 *							1		3-3/8		276
K1-5 MAN CLK L		F01P1		1-02 *											276
K1-5 MAN CLK L				1									3-3/8		276
K1-5 PROC CLK H		E02J2		1-01 *	H						1	TWP	4-3/8		277
K1-5 PROC CLK H		F01P2		1-02 *	X							TWP			277
K1-5 PROC CLK H				1									4-3/8		277
K1-5 PROC CLK L		E01R1		1-01 *							1		0-6/8		278
K1-5 PROC CLK L		E02M1		1-02 *											278
K1-5 PROC CLK L				1									0-6/8		278
K1-5 TAP 30 H		D01E2		1-01 *	H						1	TWP	4-1/8		279
K1-5 TAP 30 H		E02M2		1-02 *	X							TWP			279
K1-5 TAP 30 H				1									4-1/8		279
K1-6 PBA 00 H		C01L2		1-01 *							1		4-7/8		280
K1-6 PBA 00 H		E02C1		1-02 *											280
K1-6 PBA 00 H				1									4-7/8		280
K1-6 PBA 01 H		C01H1		1-01 *							1		5-3/8		281
K1-6 PBA 01 H		D02V2		1-02 *											281
K1-6 PBA 01 H				1									5-3/8		281
K1-6 PBA 02 H		D02U2		1-01 *							1		1-7/8		282
K1-6 PBA 02 H		E01E2		1-02 *											282
K1-6 PBA 02 H				1									1-7/8		282
K1-6 PBA 03 H		D01M1		1-01 *							1		2-3/8		283
K1-6 PBA 03 H		E02B1		1-02 *											283
K1-6 PBA 03 H				1									2-3/8		283
K1-6 VBA 00(1) H		D02H1		1-01 *							1		4-1/8		284
K1-6 VBA 00(1) H		E01T2		1-02 *											284
K1-6 VBA 00(1) H				1									4-1/8		284
K1-8 KT FAULT L		D01D2		1-01 *							1		7-5/8		285
K1-8 KT FAULT L		F02T2		1-02 *											285
K1-8 KT FAULT L				1									7-5/8		285
K2-1 CLK MSYN H		C01J1		1-01 *							1		10-3/8		286
K2-1 CLK MSYN H		F02V2		1-02 *											286
K2-1 CLK MSYN H				1									10-3/8		286
K2-1 DISABLE WBIT L		D01F2		1-01 *							1		6-7/8		287
K2-1 DISABLE WBIT L		F02S1		1-02 *											287
K2-1 DISABLE WBIT L				1									6-7/8		287
K2-1 ENAB ADDR5 L		D02E2		1-01 *							1		5-5/8		288
K2-1 ENAB ADDR5 L		F01B2		1-02 *											288
K2-1 ENAB ADDR5 L				1									5-5/8		288

RUN NAME	A/P	PIN NAME	ORDER PIN	BAY - ORDER	Q	DRAW OPT	RV	RG	Y	X	Z	REMARKS	NC LENGTH FLAG	EXCEPTIONS	RUN NUMBER
K2-1 INT MSYN H		C01F2		1-01	*						1		2-7/8		289
K2-1 INT MSYN H		D02C1		1-02	*										289
K2-1 INT MSYN H				1									2-7/8		289
K2-1 KTE(1) H		C02M2		1-01	*						1		5-5/8		290
K2-1 KTE(1) H		E01J2		1-02	*										290
K2-1 KTE(1) H				1									5-5/8		290
K2-1 MSYN(1) L		C01H2		1-01	*						1		9-1/8		291
K2-1 MSYN(1) L		F02K2		1-02	*										291
K2-1 MSYN(1) L				1									9-1/8		291
K2-1 PE(1) H		C01T2		1-01	*						1		0-7/8		292
K2-1 PE(1) H		C02T2		1-02	*										292
K2-1 PE(1) H				1									0-7/8		292
K2-1 START TRAN L		C01N2		1-01	*						1		4-3/8		293
K2-1 START TRAN L		E02A1		1-02	*										293
K2-1 START TRAN L				1									4-3/8		293
K2-1 TRAN INH L		C01K2		1-01	*						1		7-7/8		294
K2-1 TRAN INH L		F02C1		1-02	*										294
K2-1 TRAN INH L				1									7-7/8		294
K2-1 UBUS C0(1) H		C01B2		1-01	*						1		4-1/8		295
K2-1 UBUS C0(1) H		D02H2		1-02	*										295
K2-1 UBUS C0(1) H				1									4-1/8		295
K2-1 UBUS C1(1) H		C01C1		1-01	*						1		4-3/8		296
K2-1 UBUS C1(1) H		D02J1		1-02	*										296
K2-1 UBUS C1(1) H				1									4-3/8		296
K2-2 BG INH L		F01R2		1-01	*						1		2-1/8		297
K2-2 BG INH L		F02B1		1-02	*										297
K2-2 BG INH L				1									2-1/8		297
K2-2 PROC INIT L		E01U1		1-01	*						1		1-7/8		298
K2-2 PROC INIT L		F02D2		1-02	*										298
K2-2 PROC INIT L				1									1-7/8		298
K2-2 RCD INIT L		C01E2		1-01	*						1		8-7/8		299
K2-2 RCD INIT L		F02E2		1-02	*										299
K2-2 RCD INIT L				1									8-7/8		299
K2-2 SACK RET(1) H		C01R2		1-01	*						1		5-3/8		300
K2-2 SACK RET(1) H		E02L1		1-02	*										300
K2-2 SACK RET(1) H				1									5-3/8		300
K2-3 C2 H		C02L1		1-01	*						1		2-3/8		301
K2-3 C2 H		D01B2		1-02	*										301
K2-3 C2 H				1									2-3/8		301
K2-3 C3 H		C01V1		1-01	*						1		0-6/8		302
K2-3 C3 H		C02S1		1-02	*										302
K2-3 C3 H				1									0-6/8		302

RUN NAME	A/P	PIN NAME	ORDER PIN	BAY - ORDER	Q	DRAW OPT	RV	RG	Y	X	Z	REMARKS	NC LENGTH FLAG	EXCEPTIONS	RUN NUMBER
K2-3 C4 H		C01U1		1-01 *							1		1-4/8		303
K2-3 C4 H		C02N2		1-02 *											303
K2-3 C4 H				1									1-4/8		303
K2-3 INT VECTOR L		D01A1		1-01 *							1		7-1/8		304
K2-3 INT VECTOR L		F02U1		1-02 *											304
K2-3 INT VECTOR L				1									7-1/8		304
K2-3 INTR H		C01V2		1-01 *							1		7-1/8		305
K2-3 INTR H		F02H1		1-02 *											305
K2-3 INTR H				1									7-1/8		305
K2-4 SP WRITE L		E02F1		1-01 *							1		4-7/8		306
K2-4 SP WRITE L		F01V2		1-02 *											306
K2-4 SP WRITE L				1									4-7/8		306
K2-4 SPA 00 H		C01D2		1-01 *	H						1	TWP	3-7/8		307
K2-4 SPA 00 H		D02F2		1-02 *	X							TWP			307
K2-4 SPA 00 H				1									3-7/8		307
K2-4 SPA 01 H		C01N1		1-01 *	H						1	TWP	2-5/8		308
K2-4 SPA 01 H		D02B2		1-02 *	X							TWP			308
K2-4 SPA 01 H				1									2-5/8		308
K2-4 SPA 02 H		C01S1		1-01 *	H						1	TWP	3-1/8		309
K2-4 SPA 02 H		D02L1		1-02 *	X							TWP			309
K2-4 SPA 02 H				1									3-1/8		309
K2-4 SPA 03 H		C01U2		1-01 *	H						1	TWP	2		310
K2-4 SPA 03 H		D02D2		1-02 *	X							TWP			310
K2-4 SPA 03 H				1									2-0/8		310
K2-5 BYTE L		E01H2		1-01 *							1		3-7/8		311
K2-5 BYTE L		F02L1		1-02 *											311
K2-5 BYTE L				1									3-7/8		311
K2-5 CC CODE 00 H		F01S1		1-01 *							1		1-4/8		312
K2-5 CC CODE 00 H		F02J1		1-02 *											312
K2-5 CC CODE 00 H				1									1-4/8		312
K2-5 CC CODE 01 H		E01U2		1-01 *							1		2-3/8		313
K2-5 CC CODE 01 H		F02H2		1-02 *											313
K2-5 CC CODE 01 H				1									2-3/8		313
K2-5 CC CODE 02 H		F01C1		1-01 *							1		4-7/8		314
K2-5 CC CODE 02 H		F02M2		1-02 *											314
K2-5 CC CODE 02 H				1									4-7/8		314
K2-5 LOAD IR H		E01D2		1-01 *							1		4-5/8		315
K2-5 LOAD IR H		F02P2		1-02 *											315
K2-5 LOAD IR H				1									4-5/8		315
K2-5 ROT CBIT(1) H		F01R1		1-01 *							1		1-1/8		316
K2-5 ROT CBIT(1) H		F02K1		1-02 *											316
K2-5 ROT CBIT(1) H				1									1-1/8		316

RUN NAME	A/P	PIN NAME	ORDER PIN	BAY - ORDER	Q	DRAW OPT	RV	RG	Y	X	Z	REMARKS	NC LENGTH FLAG	EXCEPTIONS	RUN NUMBER
K2-5 SERIAL SHIFT H		E01F2		1-01 *							1		4-./8		317
K2-5 SERIAL SHIFT H		F02N1		1-02 *											317
K2-5 SERIAL SHIFT H				1									4-1/8		317
K2-6 DISAB LOAD PSW H		D01C1		1-01 *							1		7-7/8		318
K2-6 DISAB LOAD PSW H		F02S2		1-02 *											318
K2-6 DISAB LOAD PSW H				1									7-7/8		318
K2-7 LOAD CC L		F01N1		1-01 *							1		1-4/8		319
K2-7 LOAD CC L		F02F2		1-02 *											319
K2-7 LOAD CC L				1									1-4/8		319
K2-7 LOAD PSW L		E02N2		1-01 *							1		3-1/8		320
K2-7 LOAD PSW L		F01J2		1-02 *											320
K2-7 LOAD PSW L				1									3-1/8		320
K2-8 ALU CIN L		C02R2		1-01 *							1		7-7/8		321
K2-8 ALU CIN L		F01E2		1-02 *											321
K2-8 ALU CIN L				1									7-7/8		321
K2-8 ALU MODE H		C02K2		1-01 *							1		8-7/8		322
K2-8 ALU MODE H		F01J1		1-02 *											322
K2-8 ALU MODE H				1									8-7/8		322
K2-8 ALU S0 H		C02V2		1-01 *							1		7-1/8		323
K2-8 ALU S0 H		F01B1		1-02 *											323
K2-8 ALU S0 H				1									7-1/8		323
K2-8 ALU S1 H		D02D1		1-01 *							1		3-7/8		324
K2-8 ALU S1 H		E01H1		1-02 *											324
K2-8 ALU S1 H				1									3-7/8		324
K2-8 ALU S2 H		E01F1		1-01 *							1		0-6/8		325
K2-8 ALU S2 H		E02H1		1-02 *											325
K2-8 ALU S2 H				1									0-6/8		325
K2-8 ALU S3 H		E01R2		1-01 *							1		1-7/8		326
K2-8 ALU S3 H		E02F2		1-02 *											326
K2-8 ALU S3 H				1									1-7/8		326
K2-8 AUX CONTROL(1) L		D01D1		1-01 *							1		4-5/8		327
K2-8 AUX CONTROL(1) L		E02R1		1-02 *											327
K2-8 AUX CONTROL(1) L				1									4-5/8		327
K2-8 BLEG 00 H		C02V1		1-01 *							1		7-1/8		328
K2-8 BLEG 00 H		F01C1		1-02 *											328
K2-8 BLEG 00 H				1									7-1/8		328
K2-8 BLEG 01 H		D02N1		1-01 *							1		5-7/8		329
K2-8 BLEG 01 H		F01M2		1-02 *											329
K2-8 BLEG 01 H				1									5-7/8		329
K2-8 BMODE 00 L		D02E1		1-01 *							1		6-3/8		330
K2-8 BMODE 00 L		F01L2		1-02 *											330
K2-8 BMODE 00 L				1									6-3/8		330

RUN NAME	A/P	PIN NAME	ORDER PIN	BAY - ORDER	Q	DRAW OPT	RV	RG	Y	X	Z	REMARKS	NC LENGTH FLAG	EXCEPTIONS	RUN NUMBER
K2-8 BMODE 01 L		C02U2		1-01 *							1		8-7/8		331
K2-8 BMODE 01 L		F01U2		1-02 *											331
K2-8 BMODE 01 L				1									8-7/8		331
K2-8 BXMODE 00 L		E01S1		1-01 *							1		1-3/8		332
K2-8 BXMODE 00 L		E02R2		1-02 *											332
K2-8 BXMODE 00 L				1									1-3/8		332
K2-8 BXMODE 01 L		E02S2		1-01 *							1		3-1/8		333
K2-8 BXMODE 01 L		F01L1		1-02 *											333
K2-8 BXMODE 01 L				1									3-1/8		333
K2-8 DIS UPR BTWRT H		E01P1		1-01 *							1		3-7/8		334
K2-8 DIS UPR BTWRT H		F02R1		1-02 *											334
K2-8 DIS UPR BTWRT H				1									3-7/8		334
K2-8 DISABLE MSYN+1 L		C02S2		1-01 *							1		5-7/8		335
K2-8 DISABLE MSYN+1 L		E01M1		1-02 *											335
K2-8 DISABLE MSYN+1 L				1									5-7/8		335
K2-8 ENAB MAINT(1) H		F01S2		1-01 *							1		1		336
K2-8 ENAB MAINT(1) H		F02U2		1-02 *											336
K2-8 ENAB MAINT(1) H				1									1-0/8		336
K2-8 ENAB OVX L		E01N1		1-01 *							1		1-1/8		337
K2-8 ENAB OVX L		E02J1		1-02 *											337
K2-8 ENAB OVX L				1									1-1/8		337
K2-8 LOAD BA(1) H		F01D1		1-01 *							1		0-7/8		338
K2-8 LOAD BA(1) H		F02D1		1-02 *											338
K2-8 LOAD BA(1) H				1									0-7/8		338
K2-8 LONG CYCLE(1) L		E02V2		1-01 *							1		3-7/8		339
K2-8 LONG CYCLE(1) L		F01V1		1-02 *											339
K2-8 LONG CYCLE(1) L				1									3-7/8		339
K2-8 MODE 01 H		E02P1		1-01 *							1		3-1/8		340
K2-8 MODE 01 H		F01N2		1-02 *											340
K2-8 MODE 01 H				1									3-1/8		340
K2-8 SEX H		C02L2		1-01 *							1		6-1/8		341
K2-8 SEX H		E01J1		1-02 *											341
K2-8 SEX H				1									6-1/8		341
K2-8 SHIFT MUX 00 L		F01K2		1-01 *							1		0-4/8		342
K2-8 SHIFT MUX 00 L		F02M1		1-02 *											342
K2-8 SHIFT MUX 00 L				1									0-4/8		342
K2-8 SHIFT MUX 01 L		F01U1		1-01 *							1		1-1/8		343
K2-8 SHIFT MUX 01 L		F02P1		1-02 *											343
K2-8 SHIFT MUX 01 L				1									1-1/8		343
K2-8 SWAP H		C02P2		1-01 *							1		6-3/8		344
K2-8 SWAP H		E01S2		1-02 *											344
K2-8 SWAP H				1									6-3/8		344

RUN NAME	A/P	PIN NAME	ORDER PIN	BAY - ORDER	Q	DRAW OPT	RV	RG	Y	X	Z	REMARKS	NC FLA	LENGTH EXCEPTIONS	RUN NUMBER
K2-9 AMUX S0(1) L		F01D2		1-01 *							1			2-3/8	345
K2-9 AMUX S0(1) L		F02V1		1-02 *											345
K2-9 AMUX S0(1) L				1										2-3/8	345
K2-9 AMUX S1(1) L		F01H1		1-01 *							1			1-6/8	346
K2-9 AMUX S1(1) L		F02R2		1-02 *											346
K2-9 AMUX S1(1) L				1										1-6/8	346
K2-9 FORC KERNEL(1) H		C01L1		1-01 *							1			5-7/8	347
K2-9 FORC KERNEL(1) H		E02K1		1-02 *											347
K2-9 FORC KERNEL(1) H				1										5-7/8	347
K2-9 PREV MODE(1) L		C01S2		1-01 *							1			2-7/8	348
K2-9 PREV MODE(1) L		D02J2		1-02 *											348
K2-9 PREV MODE(1) L				1										2-7/8	348
LTC		C03D1		1-01 *	P						2			0-7/8	349
LTC		C04D1		1-02 *	P						1			0-7/8	349
LTC		C05D1		1-03 *	P						2			0-7/8	349
LTC		C06D1		1-04 *	P						1			0-7/8	349
LTC		C07D1		1-05 *	P						2			0-7/8	349
LTC		C08D1		1-06 *	P						1			0-7/8	349
LTC		C09D1		1-07 *	P										349
LTC				1										5-2/8	349
MSYN L (1)		B01V1		1-01 *							2			0-7/8	350
MSYN L (1)		B02V1		1-02 *							1			0-7/8	350
MSYN L (1)		B03V1		1-03 *							2			0-7/8	350
MSYN L (1)		B04V1		1-04 *	M						1	TWP		7-1/8	350
MSYN L (1)		E03E1		1-05 *	P						2			0-7/8	350
MSYN L (1)		E04E1		1-06 *							1			0-7/8	350
MSYN L (1)		E05E1		1-07 *	P						2			0-7/8	350
MSYN L (1)		E06E1		1-08 *	P						1			0-7/8	350
MSYN L (1)		E07E1		1-09 *	P						2			0-7/8	350
MSYN L (1)		E08E1		1-10 *	P										350
MSYN L (1)				1										14-1/8	350
MSYN L (2)		E09E1		1-01 *	M						1	TWP		8-3/8	351
MSYN L (2)		B05V1		1-02 *							2			0-7/8	351
MSYN L (2)		B06V1		1-03 *							1			0-7/8	351
MSYN L (2)		B07V1		1-04 *							2			0-7/8	351
MSYN L (2)		B08V1		1-05 *							1			0-7/8	351
MSYN L (2)		B09V1		1-06 *											351
MSYN L (2)				1										11-7/8	351
MSYN L JMP		E08E1		-01 *	P						1			0-7/8	352
MSYN L JMP		E09E1		-02 *											352
MSYN L JMP														0-7/8	352

RUN NAME	A/P	PIN NAME	ORDER PIN	BAY - ORDER	Q	DRAW OPT	PV	RG	Y	X	Z	REMARKS	NC LENGTH FLAG	EXCEPTIONS	RUN NUMBER
NPG L		A01U1		1-01 *							1		3-5/8		353
NPG L		C01A1		1-02 *							2		0-2/8		353
NPG L		C01B1		1-03 *	P						2		0-5/8		353
NPG L		C02A1		1-04 *							1		0-2/8		353
NPG L		C02B1		1-05 *	P						2		0-5/8		353
NPG L		C03A1		1-06 *							1		0-2/8		353
NPG L		C03B1		1-07 *	P						2		0-5/8		353
NPG L		C04A1		1-08 *							1		0-2/8		353
NPG L		C04B1		1-09 *	P						2		0-5/8		353
NPG L		C05A1		1-10 *							1		0-2/8		353
NPG L		C05B1		1-11 *	P						2		0-5/8		353
NPG L		C06A1		1-12 *							1		0-2/8		353
NPG L		C06B1		1-13 *	P						2		0-5/8		353
NPG L		C07A1		1-14 *							1		0-2/8		353
NPG L		C07B1		1-15 *	P						2		0-5/8		353
NPG L		C08A1		1-16 *							1		0-2/8		353
NPG L		C08B1		1-17 *	P						2		0-5/8		353
NPG L		C09A1		1-18 *							1		0-2/8		353
NPG L		C09B1		1-19 *							2		3-7/8		353
NPG L		A09U1		1-20 *											353
NPG L				1									14-6/8		353
NPR L		A01S2		1-01 *							2		0-7/8		354
NPR L		A02S2		1-02 *							1		0-7/8		354
NPR L		A03S2	A04S2	1-03 *							2		0-7/8		354
NPR L		A04S2		1-04 *	H						1	TWPR	13-3/8		354
NPR L		F03J1		1-05 *	P						2		0-7/8		354
NPR L		F04J1		1-06 *	P						1		0-7/8		354
NPR L		F05J1		1-07 *	P						2		0-7/8		354
NPR L		F06J1		1-08 *	P						1		0-7/8		354
NPR L		F07J1		1-09 *	P						2		0-7/8		354
NPR L		F08J1	F09J1	1-10 *	P						1		0-7/8		354
NPR L		F09J1		1-11 *	H						2	TWPR	14-5/8		354
NPR L		A05S2		1-12 *							1		0-7/8		354
NPR L		A06S2		1-13 *							2		0-7/8		354
NPR L		A07S2		1-14 *							1		0-7/8		354
NPR L		A08S2		1-15 *							2		0-7/8		354
NPR L		A09S2		1-16 *											354
NPR L				1									39-3/8		354

RUN NAME	A/P	PIN NAME	ORDER PIN	BAY - ORDER	Q	DRAW OPT	RV	RG	Y	X	Z	REMARKS	NC LENGTH FLAG	EXCEPTIONS	RUN NUMBER
PA L		A01M1		1-01 *	P						1		0-7/8		355
PA L		A02M1		1-02 *	P						2		0-7/8		355
PA L		A03M1		1-03 *	P						1		0-7/8		355
PA L		A04M1		1-04 *							2		5-1/8		355
PA L		C03C1		1-05 *							1		0-7/8		355
PA L		C04C1		1-06 *							2		0-7/8		355
PA L		C05C1		1-07 *							1		0-7/8		355
PA L		C06C1		1-08 *							2		0-7/8		355
PA L		C07C1		1-09 *							1		0-7/8		355
PA L		C08C1		1-10 *							2		0-7/8		355
PA L		C09C1		1-11 *							1		6-5/8		355
PA L		A05M1		1-12 *	P						2		0-7/8		355
PA L		A06M1		1-13 *	P						1		0-7/8		355
PA L		A07M1		1-14 *	P						2		0-7/8		355
PA L		A08M1		1-15 *	P						1		0-7/8		355
PA L		A09M1		1-16 *	P										355
PA L				1									23-1/8		355
PAR DET		B02E2		1-01 *							2		0-7/8		356
PAR DET		B03E2		1-02 *							1		0-7/8		356
PAR DET		B04E2		1-03 *							2		0-7/8		356
PAR DET		B05E2		1-04 *							1		0-7/8		356
PAR DET		B06E2		1-05 *							2		0-7/8		356
PAR DET		B07E2		1-06 *							1		0-7/8		356
PAR DET		B08E2		1-07 *											356
PAR DET				1									5-2/8		356
PAR P0		A02P1		1-01 *	P						2		0-7/8		357
PAR P0		A03P1		1-02 *	P						1		0-7/8		357
PAR P0		A04P1		1-03 *	P						2		0-7/8		357
PAR P0		A05P1		1-04 *	P						1		0-7/8		357
PAR P0		A06P1		1-05 *	P						2		0-7/8		357
PAR P0		A07P1		1-06 *	P						1		0-7/8		357
PAR P0		A08P1		1-07 *	P										357
PAR P0				1									5-2/8		357
PAR P1		A02N1		1-01 *	P						2		0-7/8		358
PAR P1		A03N1		1-02 *	P						1		0-7/8		358
PAR P1		A04N1		1-03 *	P						2		0-7/8		358
PAR P1		A05N1		1-04 *	P						1		0-7/8		358
PAR P1		A06N1		1-05 *	P						2		0-7/8		358
PAR P1		A07N1		1-06 *	P						1		0-7/8		358
PAR P1		A08N1		1-07 *	P										358
PAR P1				1									5-2/8		358

RUN NAME	A/P	PIN NAME	ORDER PIN	BAY - ORDER	Q	DRAW OPT	RV	RG	Y	X	Z	REMARKS	NC LENGTH FLAG	EXCEPTIONS	RUN NUMBER
PB L		A01N2		1-01 *	P						2		0-7/8		359
PB L		A02N2		1-02 *	P						1		0-7/8		359
PB L		A03N2		1-03 *	P						2		0-7/8		359
PB L		A04N2		1-04 *							1		6-7/8		359
PB L		C03S1		1-05 *	P						2		0-7/8		359
PB L		C04S1		1-06 *	P						1		0-7/8		359
PB L		C05S1		1-07 *	P						2		0-7/8		359
PB L		C06S1		1-08 *	P						1		0-7/8		359
PB L		C07S1		1-09 *	P						2		0-7/8		359
PB L		C08S1		1-10 *	P						1		0-7/8		359
PB L		C09S1		1-11 *							2		7-5/8		359
PB L		A05N2		1-12 *	P						1		0-7/8		359
PB L		A06N2		1-13 *	P						2		0-7/8		359
PB L		A07N2		1-14 *	P						1		0-7/8		359
PB L		A08N2		1-15 *							2		0-7/8		359
PB L		A09N2		1-16 *											359
PB L				1									25-7/8		359
RESERVED M BUS		C01E1		1-01 *							1		3-7/8		360
RESERVED M BUS		B02A1		1-02 *	P						2		0-7/8		360
RESERVED M BUS		B03A1		1-03 *	P						1		0-7/8		360
RESERVED M BUS		B04A1		1-04 *	P						2		0-7/8		360
RESERVED M BUS		B05A1		1-05 *	P						1		0-7/8		360
RESERVED M BUS		B06A1		1-06 *	P						2		0-7/8		360
RESERVED M BUS		B07A1		1-07 *	P						1		0-7/8		360
RESERVED M BUS		B08A1		1-08 *	P										360
RESERVED M BUS				1									9-1/8		360
SACK L		A01R2		1-01 *	P						2		0-7/8		361
SACK L		A02R2		1-02 *	P						1		0-7/8		361
SACK L		A03R2		1-03 *	P						2		0-7/8		361
SACK L		A04R2		1-04 *							1		14-3/8		361
SACK L		F03T2		1-05 *	P						2		0-7/8		361
SACK L		F04T2		1-06 *	H						1	2' TWP	0-7/8		361
SACK L		F05T2		1-07 *	P						2		0-7/8		361
SACK L		F06T2		1-08 *	P						1		0-7/8		361
SACK L		F07T2		1-09 *	P						2		0-7/8		361
SACK L		F08T2		1-10 *	P						1		0-7/8		361
SACK L		F09T2		1-11 *							2		15-7/8		361
SACK L		A05R2		1-12 *	P						1		0-7/8		361
SACK L		A06R2		1-13 *	P						2		0-7/8		361
SACK L		A07R2		1-14 *	P						1		0-7/8		361
SACK L		A08R2		1-15 *	P						2		0-7/8		361
SACK L		A09R2		1-16 *	P										361
SACK L				1									41-5/8		361
SSYN L (1)		B01U1		1-01 *	P						1		0-7/8		362
SSYN L (1)		B02U1		1-02 *	P						2		0-7/8		362
SSYN L (1)		B03U1		1-03 *	P						1		0-7/8		362
SSYN L (1)		B04U1		1-04 *	H						2	TWP	7-3/8		362
SSYN L (1)		E03J1		1-05 *	P						1		0-7/8		362
SSYN L (1)		E04J1		1-06 *							2		2-5/8		362
SSYN L (1)		F04C1		1-07 *	P						2		0-7/8		362
SSYN L (1)		F03C1		1-08 *	P										362
SSYN L (1)				1									14-3/8		362

RUN NAME	A/P	PIN NAME	ORDER PIN	BAY - ORDER	Q	DRAW OPT	RV	RG	Y	X	Z	REMARKS	NC LENGTH FLAG	EXCEPTIONS	RUN NUMBER
SSYN L (2)		B09U1		1-01 *	P						1		0-7/8		363
SSYN L (2)		B08U1		1-02 *	P						1		0-7/8		363
SSYN L (2)		B07U1		1-03 *	P						2		0-7/8		363
SSYN L (2)		B06U1		1-04 *	P						1		0-7/8		363
SSYN L (2)		B05U1		1-05 *	H						2	TWP	9-1/8		363
SSYN L (2)		E09J1		1-06 *	P						1		0-7/8		363
SSYN L (2)		E08J1		1-07 *	P						2		0-7/8		363
SSYN L (2)		E07J1		1-08 *	P						1		0-7/8		363
SSYN L (2)		E06J1		1-09 *	P						2		0-7/8		363
SSYN L (2)		E05J1		1-10 *							1		2-5/8		363
SSYN L (2)		F05C1		1-11 *	P						1		0-7/8		363
SSYN L (2)		F06C1		1-12 *	P						2		0-7/8		363
SSYN L (2)		F07C1		1-13 *	P						1		0-7/8		363
SSYN L (2)		F08C1		1-14 *	P						2		0-7/8		363
SSYN L (2)		F09C1		1-15 *	P										363
SSYN L (2)				1									22-2/8		363
SSYN L JMP		F05C1		1-01 *	H						1	2' TWP	0-7/8		364
SSYN L JMP		F04C1		1-02 *											364
SSYN L JMP				1									0-7/8		364

"THE MATERIAL HEREIN IS FOR INFORMATION PURPOSES ONLY AND IS SUBJECT TO CHANGE WITHOUT NOTICE. DIGITAL EQUIPMENT CORPORATION ASSUMES NO RESPONSIBILITY FOR ANY ERRORS WHICH MAY APPEAR HEREIN."

FIELD MAINTENANCE PRINT SET

"THIS DRAWING AND SPECIFICATIONS HEREIN ARE THE PROPERTY OF DIGITAL EQUIPMENT CORPORATION AND SHALL NOT BE REPRODUCED OR COPIED OR USED IN WHOLE OR IN PART AS THE BASIS FOR THE MANUFACTURE OR SALE OF ITEMS WITHOUT WRITTEN PERMISSION. COPYRIGHT © 1977, DIGITAL EQUIPMENT CORPORATION."

TABLE OF CONTENTS

FIELD MAINT. PRINT SET BA11-L	B-TC-BA11-L-1
BOX 5.25 BA11-L	E-UA-BA11-L-Ø
BOX 5.25 BA11-L(PARTS LIST)	A-PL-BA11-L-Ø
PRINT SET H777-B	MPØØØ16
CONSOLE ASSY. EXPANSION BOX	D-AD-7012540-0-0
INSTALLATION AID	E-AD-7012588-0-0
DRAWING DIRECTORY BA11-L	B-DD-BA11-L
SHIPPING LIST	A-PL-BA11-L-4
PRINT SET H777-VOL 2	MP 00309

UNIT VARIATIONS COVERED BY THIS PRINT SET	
BA11-LA	MANUFACTURING USE ONLY
BA11-LB	
BA11-LC	
BA11-LD	
BA11-LE	EXPANSION BOX
BA11-LF	
BA11-LH	
BA11-LJ	
BA11-LK	MANUFACTURING USE ONLY
BA11-LL	
BA11-LM	
BA11-LN	

BA11-L

Field Maintenance Print Set

Digital Equipment Corporation

PRINT SET ORDER NO.
MPØØØ18

REVISIONS		
REV.	CHG. NO.	DATE
A	BA11-L-4	APR-76
B	BA11-L-6	OCT-76
C	BA11-L-8	MAR-77
D	BA11-L-9	APR-77
E	BA11-L-11	JUL-77
F	BA11-L-14	DEC-77

USED ON OPTION/MODEL	
11/Ø4	
11/34	

SHEET I OF 1

DRN. D. HEALY	DATE 9/30/75	TITLE FIELD MAINTENANCE PRINT SET BA11-L
CHK'D D. HEALY	DATE 9/30/75	
PROJ. ENG. R. Barry	DATE 10-22-75	
FIELD SERV.	DATE	

digital

SIZE	CODE	NUMBER	REV
B	TC	BA11-L-1	F

DIST

EN 01124 16 M076 (3231)

DRB 124

BLANK

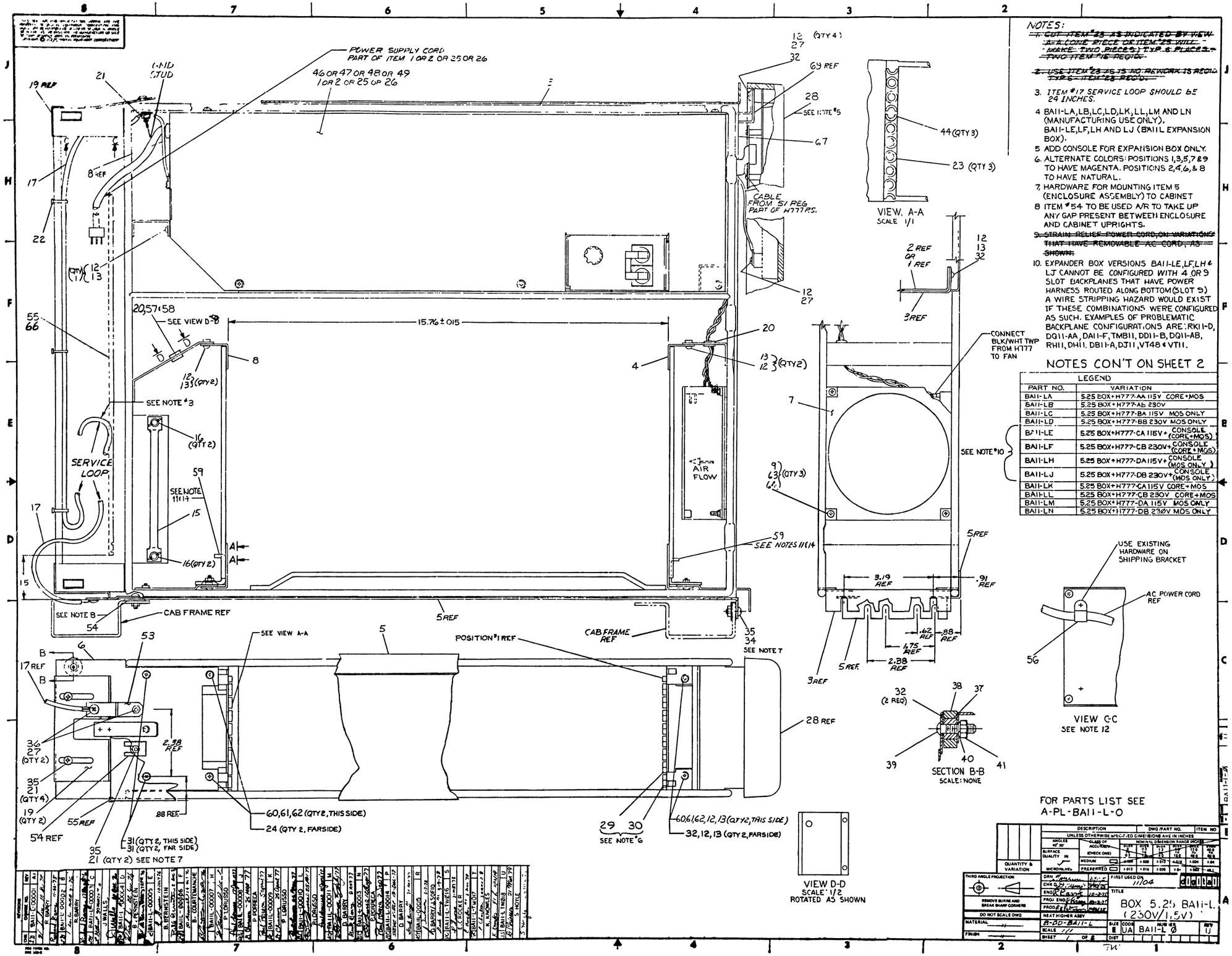

NOTES:

~~1. CUT ITEM #23 AS INDICATED BY VIEW A-A (ONE PIECE OF ITEM #23 WILL MAKE TWO PIECES.) TYP. 6 PLACES. TWO ITEM #16 REQ'D.~~

~~2. USE ITEM #23 AS IS. NO REWORK IS REQ'D. TYP. 6. ITEM #23 REQ'D.~~

3. ITEM #17 SERVICE LOOP SHOULD BE 24 INCHES.
4. BA11-LA, LB, LC, LD, LK, LL, LM AND LN (MANUFACTURING USE ONLY). BA11-LE, LF, LH AND LJ (BA11 L EXPANSION BOX).
5. ADD CONSOLE FOR EXPANSION BOX ONLY.
6. ALTERNATE COLORS: POSITIONS 1,3,5,7 & 9 TO HAVE MAGENTA. POSITIONS 2,4,6, & 8 TO HAVE NATURAL.
7. HARDWARE FOR MOUNTING ITEM 5 (ENCLOSURE ASSEMBLY) TO CABINET
8. ITEM #54 TO BE USED A/R TO TAKE UP ANY GAP PRESENT BETWEEN ENCLOSURE AND CABINET UPRIGHTS.

~~9. STRAIN RELIEF POWER CORD, ON VARIATIONS THAT HAVE REMOVABLE AC CORD, AS SHOWN.~~

10. EXPANDER BOX VERSIONS BA11-LE, LF, LH & LJ CANNOT BE CONFIGURED WITH 4 OR 9 SLOT BACKPLANES THAT HAVE POWER HARNESS ROUTED ALONG BOTTOM (SLOT 9) A WIRE STRIPPING HAZARD WOULD EXIST IF THESE COMBINATIONS WERE CONFIGURED AS SUCH. EXAMPLES OF PROBLEMATIC BACKPLANE CONFIGURATIONS ARE: RK11-D, DQ11-AA, DA11-F, TMB11, DD11-B, DQ11-AB, RH11, DH11, DB11-A, DJ11, VT48 & VT11.

NOTES CON'T ON SHEET 2

LEGEND

PART NO.	VARIATION
BA11-LA	5.25 BOX+H777-AA 115V CORE+MOS
BA11-LB	5.25 BOX+H777-AB 230V
BA11-LC	5.25 BOX+H777-BA 115V MOS ONLY
BA11-LD	5.25 BOX+H777-BB 230V MOS ONLY
BA11-LE	5.25 BOX+H777-CA 115V+CONSOLE (CORE+MOS)
BA11-LF	5.25 BOX+H777-CB 230V+CONSOLE (CORE+MOS)
BA11-LH	5.25 BOX+H777-DA 115V+CONSOLE (MOS ONLY)
BA11-LJ	5.25 BOX+H777-DB 230V+CONSOLE (MOS ONLY)
BA11-LK	5.25 BOX+H777-CA 115V CORE+MOS
BA11-LL	5.25 BOX+H777-CB 230V CORE+MOS
BA11-LM	5.25 BOX+H777-DA 115V MOS ONLY
BA11-LN	5.25 BOX+H777-DB 230V MOS ONLY

FOR PARTS LIST SEE A-PL-BA11-L-0

REVISIONS			
CHG	Change No.	REV	
1	BA11-C0000	A1	
2	BA11-C0002	B	
3	BA11-C0003	C	
4	BA11-C0004	D	
5	BA11-C0005	E	
6	BA11-C0006	F	
7	BA11-C0007	H	
8	BA11-C0008	L	
9	BA11-C0009	K	
10	BA11-C0010	L	
11	BA11-C0011	M	
12	BA11-C0012	P	
13	BA11-C0013	R	
14	BA11-C0014	S	
15	BA11-C0015	T	
16	BA11-C0016	U	
17	BA11-C0017	V	
18	BA11-C0018	W	
19	BA11-C0019	X	
20	BA11-C0020	Y	
21	BA11-C0021	U	
22	BA11-C0022	U	

QUANTITY & VARIATION	DESCRIPTION	DWG./PART NO.	ITEM NO.
	UNLESS OTHERWISE SPECIFIED DIMENSIONS ARE IN INCHES		

ANGLES ±0° 30'	CLASS OF ACCURACY (CHECK ONE)	NOMINAL DIMENSION RANGE INCHES				
SURFACE QUALITY IN MICROINCHES		OVER 0 TO 6	OVER 6 TO 18	OVER 18 TO 48	OVER 48 TO 120	OVER 120 TO 480
	MEDIUM	±.005	±.008	±.012	±.015	±.020
	PREFERRED	±.012	±.015	±.020	±.0	±.062

THIRD ANGLE PROJECTION

REMOVE BURRS AND BREAK SHARP CORNERS

DO NOT SCALE DWG

MATERIAL

FINISH

DRN		
CHK'D		
ENG		
PROJ ENG		
PROD		
NEXT HIGHER ASSY	B-DD-BA11-L	
SCALE	///	
SHEET	1 OF 2	

FIRST USED ON 11104

TITLE BOX 5.25 BA11-L (230V/1.5V)

SIZE	CODE IDENT NO.	DWG NO.	REV
B	UA	BA11-L 0	U

DIST

TM

NOTES: (CONT FROM SHEET 1)

11. ITEM NUMBER 59 IS A STIFFENING BRACKET AND MAY BE LEFT IN OR REMOVED AT FINAL DESTINATION AT USERS OPTION. IF LEFT IN IT WILL NOT INHIBIT ANY USER FUNCTIONS. IT IS TO BE PLACED OVER THE THREADED INSERTS IN FRAME BRACKETS 7413853 & 7413854 AS SHOWN AND FASTENED BY MEANS OF AN OVER SIZED WASHER AND KEPNUT.
12. ITEM #56 AND THE AC POWER CORD ARE TO BE SHIPPED LOOSE PIECE AND INSTALLED AT SITE LOCATION.
13. ITEM #68 NOT SHOWN, IT IS USED IN SHIPPING ONLY.
14. TORQUE ITEM 59 ASSEMBLY HARDWARE TO 26 IN LBS 4 PLACES.

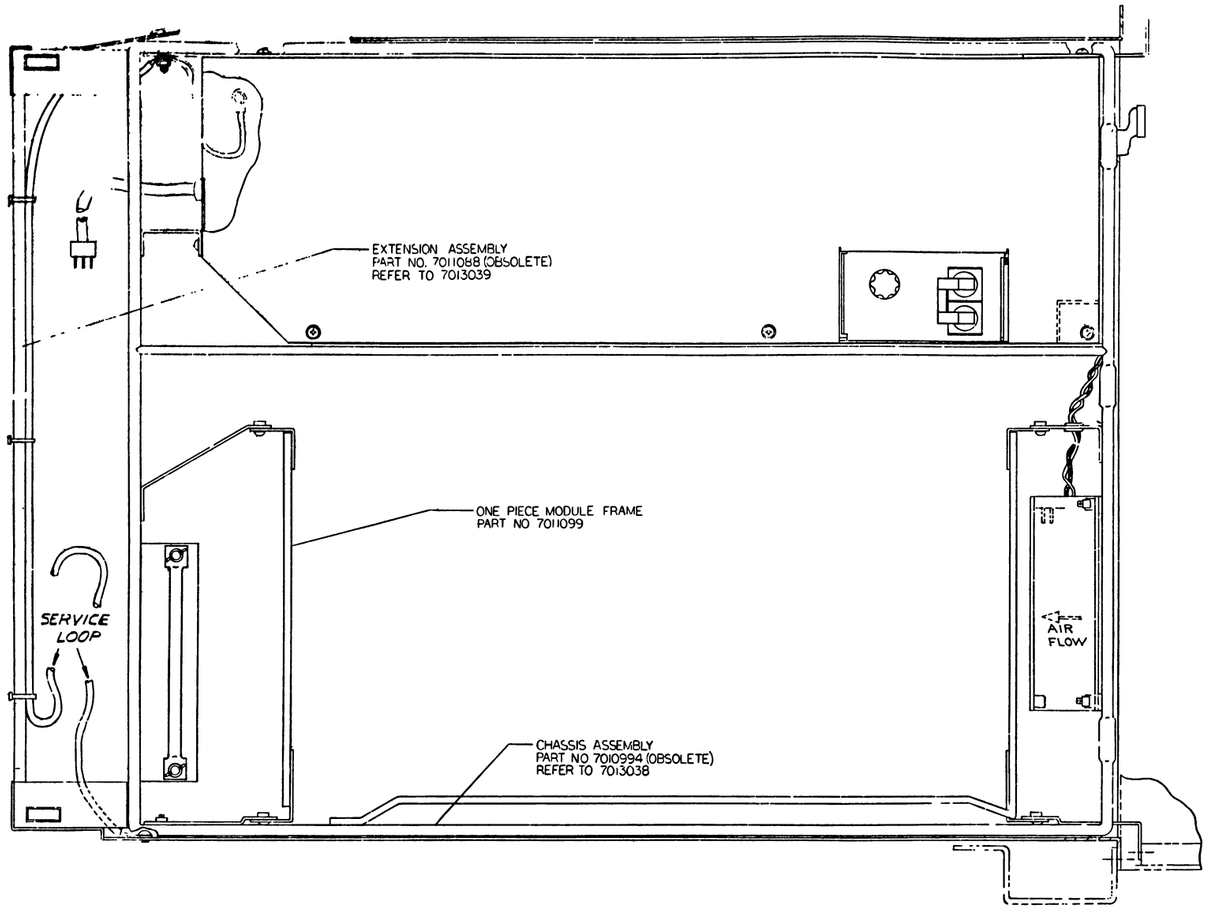

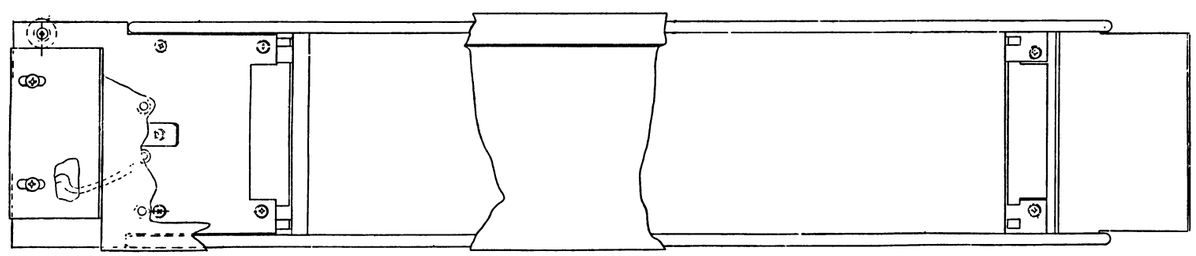

THIS VIEW IS FOR REF ONLY AND CONTAINS INFORMATION PERTINENT TO ASSEMBLY REVISIONS - THRU E

DESCRIPTION	DWG/PART NO.	ITEM NO

UNLESS OTHERWISE SPECIFIED DIMENSIONS ARE IN INCHES

ANGLES ±0° 30'	CLASS OF ACCURACY (CHECK ONE)	NOMINAL DIMENSION RANGE INCHES					
SURFACE QUALITY IN MICROINCHES	MEDIUM	0-6	6-18	18-30	30-120	120-480	OVER 480
	FINE-REFINED	±.005	±.005	±.012	±.016	±.024	±.04
QUANTITY & VARIATION		±.002	±.010	±.015	.02	±.030	±.04

THIRD ANGLE PROJECTION

REMOVE BURRS AND BREAK SHARP CORNERS

DO NOT SCALE DWG

MATERIAL

FINISH

DRN	G. MARINI	9-3-75
CHK'D	D. HEALY	9-3-75
ENG		
PROJ ENG		
PROD		
NEXT HIGHER ASSY		
B-DD-BAII-L		
SCALE	///	
SHEET	2 OF 2	

FIRST USED ON 11104

TITLE BOX 5.25 BAII-L (230V/115V)

SIZE	CODE	DWG NO	REV
E	UA	BAII-[illegible]Ø	D

DIST

DIGITAL EQUIPMENT CORPORATION
MAYNARD, MASSACHUSETTS
PARTS LIST

MADE BY G. MARINI DATE 3 SEPT 75 | CHECKED D. HEALY DATE 30 SEPT 75 | SECTION
ENG R. BARRY DATE 2 OCT 75 | PROD R.K. PETERSON DATE 2 OCT 75 | ISSUED SECT.

ITEM NO.	DWG NO./PART NO.	DESCRIPTION	BA11-LA	BA11-LB	BA11-LC	BA11-LD	BA11-LE	BA11-LF	BA11-LH	BA11-LJ	BA11-LK	BA11-LL	BA11-LM	BA11-LN
1	E-UA-H777-DA-0	POWER SUPPLY H777 (115V)	-	-	-	-	-	-	1	-	-	-	1	-
2	E-UA-H777-DB-0	POWER SUPPLY H777 (230V)	-	-	-	-	-	-	-	1	-	-	-	1
3	E-IA-7013038-0-0	CHASSIS ASSY	1	1	1	1	1	1	1	1	1	1	1	1
4	C-IA-7012653	MODULE FRAME, RIGHT SIDE	1	1	1	1	1	1	1	1	1	1	1	1
5	D-AD-7011132-0-0	ENCLOSURE ASSY	1	1	1	1	1	1	1	1	1	1	1	1
6	D-IA-7013039-0-0	EXTENSION CHASSIS ASSY	1	1	1	1	1	1	1	1	1	1	1	1
7	1213013-0-0	FAN (115V) 50/60 HZ	1	1	1	1	1	1	1	1	1	1	1	1
8	C-IA-7012846-0-0	MODULE FRAME, LEFT SIDE	1	1	1	1	1	1	1	1	1	1	1	1
9	9006026-2	SCR, PHL FLAT HD 6-32 .75L	3	3	3	3	3	3	3	3	3	3	3	3
10	~~9006633~~	~~WASHER INT TOOTH LOCK #6~~	~~2~~	~~2~~	~~2~~	~~2~~	~~2~~	~~2~~	~~2~~	~~2~~				
11	~~9009165~~	~~CLIP MPC #6-32~~	~~4~~	~~4~~	~~4~~	~~4~~	~~4~~	~~4~~	~~4~~	~~4~~	~~4~~	~~4~~	~~4~~	~~4~~
12	9006037-3	SCR PHL HD TRUSS #8-32 X .38L	9	9	9	9	13	13	13	13	8	8	8	8
13	9006634	WASHER INT TOOTH LOCK #8	8	8	8	8	8	8	8	8	8	8	8	8
14	~~9006035-1~~	~~SCR, PHL HD PAN #8-32 X .25~~	~~1~~	~~1~~	~~1~~	~~1~~	~~1~~	~~1~~	~~1~~	~~1~~				
15	B-MD-7413846-0-0	BAR, CABLE STRAIN REL	1	1	1	1	1	1	1	1	1	1	1	1
16	9009711	NUT, WING #6-32	2	2	2	2	2	2	2	2	2	2	2	2
17	C-IA-7011412-03-0	CABLE, CHASSIS GND	1	1	1	1	1	1	1	1	1	1	1	1
18	C-IA-7011412-OF-0	CABLE CHASSIS GND	REF	REF	REF	REF	REF	REF	REF	REF	REF	REF	REF	REF
19	C-MD-7414963-0-0	BRKT, SHIPPING & CAB MT	2	2	2	2	2	2	2	2	2	2	2	2
20	9007015	GROMMET .31 ID X .62 O.D.	2	2	2	2	2	2	2	2	2	2	2	2
21	9006565	NUT, KEPS #10-32	7	7	7	7	7	7	7	7	7	7	7	7
22	9007031	TIE WRAP	A/R	A/R	A/R	A/R	A/R	A/R	A/R	A/R	A/R	A/R	A/R	A/R

TITLE BOX 5.25 BA11-L (230V/115V) | ASSY NO. E-UA-BA11-L-Ø | SHEET 1 OF 4 | SIZE A | CODE PL | NUMBER BA11-L-Ø | REV U | ECO NO. BA11-L TW01d | DIST.

DEC FORM DRA 110

TW

DIGITAL EQUIPMENT CORPORATION
MAYNARD, MASSACHUSETTS
PARTS LIST

MADE BY G. MARINI DATE 3-SEP-75 | CHECKED D. HEALY DATE 30-SEP-75 | SECTION
ENG R. BARRY DATE 2-OCT-75 | PROD R.K. PETERSON DATE 2-OCT-75 | ISSUED SECT.

ITEM NO	DWG NO./PART NO.	DESCRIPTION	BA11-LA	BA11-LB	BA11-LC	BA11-LD	BA11-LE	BA11-LF	BA11-LH	BA11-LJ	BA11-LK	BA11-LL	BA11-LM	BA11-LN
44	C-MD-7418077	CARD GUIDE CENTER	3	3	3	3	3	3	3	3	3	3	3	3
~~45~~	~~1209403-01~~	~~FAN (115V) 50/60 HZ~~	~~1~~	~~1~~	~~1~~	~~1~~	~~-~~	~~-~~	~~-~~	~~-~~	~~-~~	~~-~~	~~-~~	~~-~~
46	E-UA-H777-BA-0	POWER SUPPLY H777 (115V)	-	-	1	-	-	-	-	-	-	-	-	-
47	E-UA-H777-BB-0	POWER SUPPLY H777 (230V)	-	-	-	1	-	-	-	-	-	-	-	-
48	E-UA-H777-AA-0	POWER SUPPLY H777 (115V)	1	-	-	-	-	-	-	-	-	-	-	-
49	E-UA-H777-AB-0	POWER SUPPLY H777 (230V)	-	1	-	-	-	-	-	-	-	-	-	-
~~50~~	~~E-IA-7010994-0-0~~	~~CHASSIS ASSY~~	~~1~~	~~1~~	~~1~~	~~1~~	~~-~~	~~-~~	~~-~~	~~-~~	~~-~~	~~-~~	~~-~~	~~-~~
~~51~~	~~D-IA-7011099-0-0~~	~~FRAME MODULE~~	~~1~~	~~1~~	~~1~~	~~1~~	~~-~~	~~-~~	~~-~~	~~-~~	~~-~~	~~-~~	~~-~~	~~-~~
~~52~~	~~D-IA-7011088-0-0~~	~~CHASSIS ASSY EXTENSION~~	~~1~~	~~1~~	~~1~~	~~1~~	~~-~~	~~-~~	~~-~~	~~-~~	~~-~~	~~-~~	~~-~~	~~-~~
53	B-IA-7418258	STRAP, GROUND	1	1	1	1	1	1	1	1	1	1	1	1
54	B-MD-7418259	SPACER. ENCLOSURE	A/R	A/R	A/R	A/R	A/R	A/R	A/R	A/R	A/R	A/R	A/R	A/R
55	9007035	GROMMET CATERPILLAR	A/R	A/R	A/R	A/R	A/R	A/R	A/R	A/R	A/R	A/R	A/R	A/R
56	9007083	CLAMP, CABLE	-	-	-	-	1	1	1	1	1	1	1	1
57	A-PS-3613211-01	DECAL, CSA	1	1	1	1	1	1	1	1	1	1	1	1
58	A-DC-7416197-01	DECAL, UL/NFPA	1	1	1	1	1	1	1	1	1	1	1	1
59	C-MD-7419019-0-0	BRACKET, MODULE FRAME STIFFENING	2	2	2	2	2	2	2	2	2	2	2	2
60	9006668	WASHER, FLAT	4	4	4	4	4	4	4	4	4	4	4	4
61	9006040-03	SCR, PHL. TRUSS HD. #8-32 X .625	4	4	4	4	4	4	4	4	4	4	4	4
62	9006563-00	NUT, KEP #8-32	4	4	4	4	4	4	4	4	4	4	4	4
63	9006560-00	NUT, KEP # 6-32	3	3	3	3	3	3	3	3	3	3	3	3
64	9006653	WASHER, FLAT	3	3	3	3	3	3	3	3	3	3	3	3
65	D-UA-BC11A-10-0	UNIBUS CABLE 10 FT	-	-	-	-	1	1	1	1	-	-	-	-

TITLE BOX 5.25 BA11-L (230V/115V) | ASSY NO. E-UA-BA11-L-Ø | SHEET 3 OF 4 | SIZE A | CODE PL | NUMBER BA11-L-Ø | REV. U | ECO NO. | DIST.

DEC FORM DEC 16-(325)-1031-N870 DRA 110

TW

DIGITAL EQUIPMENT CORPORATION
MAYNARD, MASSACHUSETTS
PARTS LIST

MADE BY G. MARINI DATE 3-SEP-75 | CHECKED D. HEALY DATE 30-SEP-75 | SECTION
ENG R. BARRY DATE 2-OCT-75 | PROD R.K. PETERSON DATE 2-OCT-75 | ISSUED SECT.

ITEM NO	DWG NO./PART NO.	DESCRIPTION	BA11-LA	BA11-LB	BA11-LC	BA11-LD	BA11-LE	BA11-LF	BA11-LH	BA11-LJ	BA11-LK	BA11-LL	BA11-LM	BA11-LN
23	1211630-0	CENTER CARD GUIDE	3	3	3	3	3	3	3	3	3	3	3	3
24	9009836-0	SCREW PHL TRUSS HD #8-32 X .25L LOCKING	2	2	2	2	2	2	2	2	2	2	2	2
25	E-UA-H777-CA-0	POWER SUPPLY H777 (115V)	-	-	-	-	1	-	-	-	1	-	-	-
26	E-UA-H777-CB-0	POWER SUPPLY H777(230V)	-	-	-	-	-	1	-	-	-	1	-	-
27	9008072	WASHER, EXT. TOOTH #8	3	3	3	3	7	7	7	7	3	3	3	3
28	D-AD-7012540-0-0	CONSOLE ASSY	-	-	-	-	1	1	1	1	-	-	-	-
29	1212405-4	CARD GUIDE, SINGLE	4	4	4	4	4	4	4	4	4	4	4	4
30	1212405-5	CARD GUIDE, SINGLE	5	5	5	5	5	5	5	5	5	5	5	5
31	9009836-1	SCR., PHL.HD. TRUSS #8-32 X .38 (LOCKING)	4	4	4	4	4	4	4	4	4	4	4	4
32	9006666	WASHER, FLAT #8	7	7	7	7	11	11	11	11	7	7	7	7
33														
34	9007786	NUT-10-32 SELF RETAINING	4	4	4	4	4	4	4	4	4	4	4	4
35	9006071-03	SCR., PHL. TRUSS HD. #10-32 X .38	10	10	10	10	10	10	10	10	10	10	10	10
36	9006035-3	SCR., PHL. TRUSS HD. #8-32 X .25	2	2	2	2	2	2	2	2	2	2	2	2
37	B-MD-7417606	SLEEVE, ROLLER	2	2	2	2	2	2	2	2	2	2	2	2
38	B-MD-7417607	ROLLER	2	2	2	2	2	2	2	2	2	2	2	2
39	9009483-03	SCR., RHL. TRUSS HD. #8-32 X .75	2	2	2	2	2	2	2	2	2	2	2	2
40	9006690	WASHER, SPLIT LOCK #8	2	2	2	2	2	2	2	2	2	2	2	2
41	9006561	NUT, HEX #8-32	2	2	2	2	2	2	2	2	2	2	2	2
42	3700061	CUST. SHIPPING PKG.	-	-	-	-	1	1	1	1	-	-	-	-
43	3700133	INPLANT PACKAGING	-	-	-	-	1	1	1	1	-	-	-	-
44														

TITLE BOX 5.25 BA11-1 (230V/115V) | ASSY NO. E-UA-BA11-L-Ø | SHEET 2 OF 4 | SIZE A | CODE PL | NUMBER BA11-L-Ø | REV. U | ECO NO. | DIST.

DEC FORM DEC 16-(325)-1031-N870 DRA 110

TW

DIGITAL EQUIPMENT CORPORATION
MAYNARD, MASSACHUSETTS
PARTS LIST

MADE BY G. MARINI DATE 3-SEP-75 | CHECKED D. HEALY DATE 30-SEP-75 | SECTION
ENG R. BARRY DATE 2-OCT-75 | PROD R.K. PETERSON DATE 2-OCT-75 | ISSUED SECT.

ITEM NO.	DWG NO./PART NO.	DESCRIPTION	BA11-LA	BA11-LB	BA11-LC	BA11-LD	BA11-LE	BA11-LF	BA11-LH	BA11-LJ	BA11-LK	BA11-LL	BA11-LM	BA11-LN
66	9009157	PERMA BOND 101	A/R	A/R	A/R	A/R	A/R	A/R	A/R	A/R	A/R	A/R	A/R	A/R
67	1212707	AIR FILTER BA11-L	-	-	-	-	1	1	1	1	-	-	-	-
68	9007032	TIE, CABLE, SST2 M	2	2	2	2	2	2	2	2	2	2	2	2
69	C-MD-7414962-0-0	BRKT, FILTER SUPPORT	-	-	-	-	REF	REF	REF	REF	-	-	-	-

TITLE BOX 5.25 BA11-L (230V/115V) | ASSY NO. E-UA-BA11-L-Ø | SHEET 4 OF 4 | SIZE A | CODE PL | NUMBER BA11-L-Ø | REV U | ECO NO. | DIST.

DEC FORM DEC 16-(325)-1031-N870 DRA 110

TW

BLANK

"THE MATERIAL HEREIN IS FOR INFORMATION PURPOSES ONLY AND IS SUBJECT TO CHANGE WITHOUT NOTICE. DIGITAL EQUIPMENT CORPORATION ASSUMES NO RESPONSIBILITY FOR ANY ERRORS WHICH MAY APPEAR HEREIN."

FIELD MAINTENANCE PRINT SET

"THIS DRAWING AND SPECIFICATIONS, HEREIN, ARE THE PROPERTY OF DIGITAL EQUIPMENT CORPORATION AND SHALL NOT BE REPRODUCED OR COPIED OR USED IN WHOLE OR IN PART AS THE BASIS FOR THE MANUFACTURE OR SALE OF ITEMS WITHOUT WRITTEN PERMISSION. COPYRIGHT © , DIGITAL EQUIPMENT CORPORATION."

TABLE OF CONTENTS

FIELD MAINT. PRINT SET H777-0	B-TC-H777-0-1
POWER SUPPLY H777-0 SH1	E-UA-H777-0-0
+5V REGULATOR ASSY	D-AD-7011073-0-0
BOARD, POWER DISTRIBUTION H777	D-CS-5411586-0-1
H777 +5V REGULATOR	D-CS-5411597-0-1
AC INPUT ASSY	D-AD-7011075-0-0
MOS REGULATOR H777	D-CS-5411601-0-1
CORE REGULATOR H777	D-CS-5411599-0-1
POWER SUPPLY H777-0 (PL)	A-PL-H777-0-0

UNIT VARIATIONS COVERED BY THIS PRINT SET
H777-BA (MOS ONLY)
H777-BB (MOS ONLY)
H777-AA (CORE/MOS)
H777-AB (CORE/MOS)

H777-0 VOL.I

Field Maintenance Print Set

Digital Equipment Corporation

PRINT SET ORDER NO.
MP00016

REVISIONS		
REV.	CHG. NO.	DATE
D	H777-2	JAN-77
REVISED & REDRAWN		

USED ON OPTION/MODEL	
BA11-LA	
BA11-LB	
BA11-LC	
BA11-LD	
BA11-LE	
BA11-LF	
BA11-LH	
BA11-LJ	
SHEET I OF 1	

DRN.	D. HEALY	DATE 9/30/75
CHK'D	D. HEALY	DATE 9/30/75
PROJ. ENG.	R. BARRY	DATE 10/22/75
FIELD SERV.	Roy Crane	DATE 27-Jan-77

digital

TITLE: FIELD MAINTENANCE SET H777-0

SIZE	CODE	NUMBER	REV.
B	TC	H777-0-1	D

DIST.

BLANK

"THE DRAWINGS AND SPECIFICATIONS HEREIN, ARE THE PROPERTY OF DIGITAL EQUIPMENT CORPORATION AND SHALL NOT BE REPRODUCED OR COPIED OR USED IN WHOLE OR IN PART AS THE BASIS FOR MANUFACTURE OR SALE BY PERS WITHOUT WRITTEN PERMISSION. COPYRIGHT © 1972, DIGITAL EQUIPMENT CORPORATION"

CB-1

LINE LOAD

DETAIL-A
WIRING SIDE OF CKT BREAKER PART OF ITEM #10

WIRE TABLE

ITEM NO	DESCRIPTION AWG	DESCRIPTION COLOR	FROM CONNECTION	FROM WITH	TO ITEM	TO CONNECTION	TO WITH	REMARKS
12 OR 13	14	BLK	—	—	3 OR 4	CB1-K1 LINE	—	
	14	WHT	—	—	3 OR 4	CB: -2(+) LINE	—	
	14	GRN	—	—	1	GND CHASSIS	6	
4 OR 3	14	BLU	T1-5	—	8	J1-7 (BD2)	—	
	TRPL	BLU/BLK	T1-6	—	8	J1-6 (BD2)	—	
	TWP	BLU	T1-7	—	8	J1-8 (BD2)	—	
3 OR 4	18	GRY	—	—	8	J1-4 (BD1)	—	
	TWP	BLK	—	—	8	J1-5 (BD1)	—	
3 OR 4	18	WHT	—	—	4	FAN-1	—	
	TWP	BLK	—	—	4	FAN-2	—	
3 OR 4	14	GRN/YEL	EMI-3 (REF)	—	8	GND CHASSIS	6	
60	14	GRN/YEL	GND CHASSIS	6				CONSOLE GND
27	14	GRN/YEL	GND CHASSIS	6				CHASSIS GND
	14	BLK	ITEM # 29	—	8	J1-3 (BD2)	—	FROM CORE REG
	14	ORN	ITEM # 29	—	8	J1-2 (BD2)	—	FROM CORE REG
	14	BRN	ITEM # 29	—	8	J1-1 (BD2)	—	FROM CORE REG

H777-AA, H777-AB ONLY

LEGEND

PART NO	VARIATION
H777-BA	P.S. MOS ONLY 115V
H777-BB	P.S. MOS ONLY 230V
H777-AA	P.S. CORE/MOS 115V
H777-AB	P.S. CORE/MOS 230V

NOTES:
1. MAKE 5 INCH SERVICE LOOP AT HOOK UP END.
2. APPLY SELF STICK INS SHEET (ITEM 24) TO UNDER SIDE OF POWER SUPPLY COVER IN AREA OF HEAT SINKS (CORE & MOS REGS).
3. APPLY SELF STICK ITEM 26 BESIDE THIS GND STUD.
4. ITEM 60 IS A GND CABLE TO GND THE FRONT PANEL CASTINGS FOR MOS AND CORE REGULATORS.
5. CABLE PART OF ITEM #9.
6. CABLE & WIRES ARE PART OF ITEM # 29

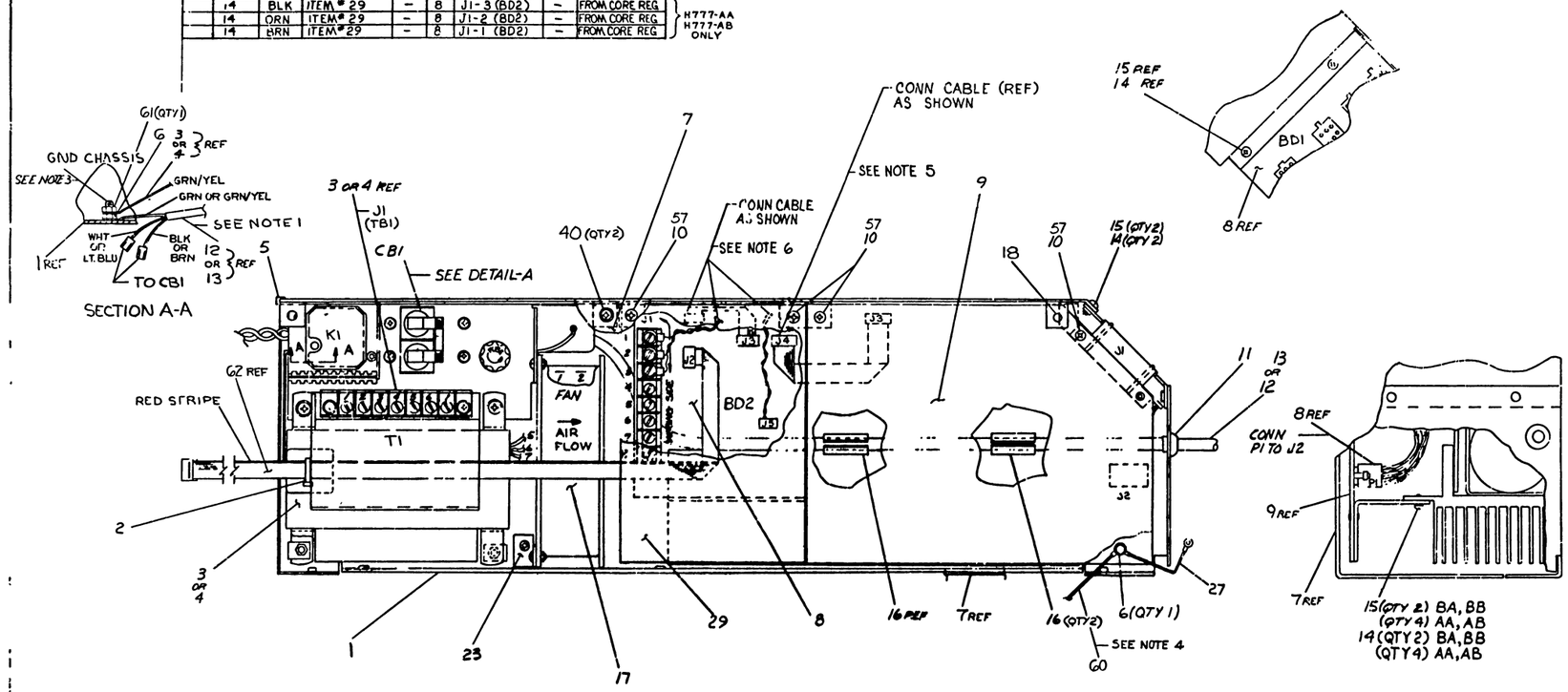

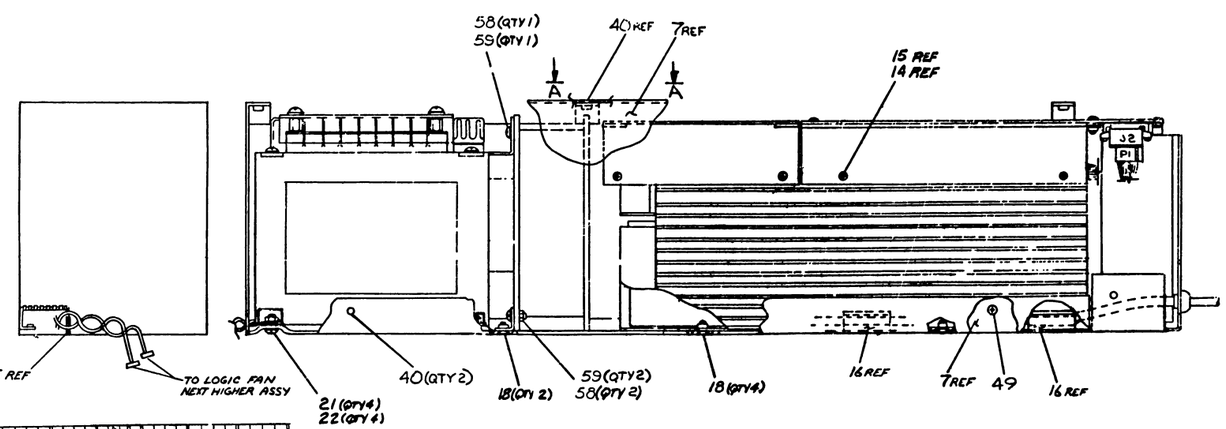

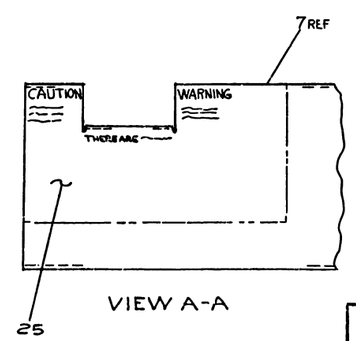

CAUTION:
UNIT ASSEMBLY FOR OPTIONS AA, AB, BA, AND BB ONLY

SEE SHEET 2 FOR OPTIONS CA, CB, DA, AND DB

SEE A-PL-H777-0 FOR PARTS LIST

FIRST USED ON	BA11-L
TITLE	POWER SUPPLY ASS'Y (H777)
MATERIAL	SEE PARTS LIST
SCALE	NONE
SIZE	B
CODE	UA
NUMBER	H777-0-0
REV	N

"THIS DRAWING AND SPECIFICATIONS, HEREIN ARE THE PROPERTY OF DIGITAL EQUIPMENT CORPORATION AND SHALL NOT BE REPRODUCED OR COPIED OR USED IN WHOLE OR IN PART AS THE BASIS FOR THE MANUFACTURE OR SALE OF ITEMS WITHOUT WRITTEN PERMISSION. COPYRIGHT © 1975, DIGITAL EQUIPMENT CORPORATION"

WIRE CHART

ITEM NO	DESCRIPTION AWG	DESCRIPTION COLOR	FROM POINT NO	FROM CONN	TO POINT NO	TO CONN
5	20	WHT	1	BD2-8	18	BD1-15
	14	BRN	2	2	9	1
	14	BLK	3	1	12	5
	14	ORN	4	3	13	7
	20	BRN	5	5	19	14
	20	BLK	6	4	20	16
	20	YEL	7	6	16	12
	20	VIO	8	7	17	13
	14	BLK	30	BD2-17	10	BD1-3

ITEM NO	DESCRIPTION AWG	DESCRIPTION COLOR	FROM POINT NO	FROM CONN	TO POINT NO	TO CONN
5	14	BLK	28	BD2-13	11	BD1-4
		RED	29	15	14	9
		RED	26	19	15	10
		BLK	25	14	21	17
		RED	24	16	22	19
	14	RED	27	BD2-20	23	BD1-20
7	18	BLU	1	BD1-21	* 11	—
	14	BLK	2	BD1-18	* 8	—
	18	RED	3	BD1-11	* 14	—

ITEM NO	DESCRIPTION AWG	DESCRIPTION COLOR	FROM POINT NO	FROM CONN	TO POINT NO	TO CONN
7	18	GRY	4	BD1-8	* 9	—
	18	WHT	5	BD1-6	* 10	—
	14	RED	6	BD2-21	* 13	—
	18	GRN	7	BD1-2	12	—
25	14	GRN	—	C1(+)	—	C2(+)
25	14	GRN	—	C1(-)	—	C2(-)
23	14	RED	—	BD2-10	—	C1(+)
24	14	BLK	—	BD2-9	—	C1(-)
22	—	BARE	—	—	—	BD2-11
22	—	BARE	—	—	—	BD2-12

NOTES:

1. USE ITEM #16 (GROMMET) TO COVER RAW METAL EDGES UNDER CAPACITORS.
2. LEADS FROM ITEMS #22, 23 & 24 ARE TO BE CUT FLUSH WITH TOP OF CLAMPS ON ITEM #1. A1, A2, A3 & A4
3. * ASTERISK INDICATES THAT THESE CONN. ALREADY HAVE BEEN MADE ON PLUG P1 ON HARNESS D-IA-7011560-0-0 THEY ARE SHOW FOR REF ONLY.
4. ITEMS #17 & #13 ARE TO HAVE THEIR ELECTRICAL CONNECTIONS TORQUED TO 12 IN-LBS (-0, +10) IN-LBS.

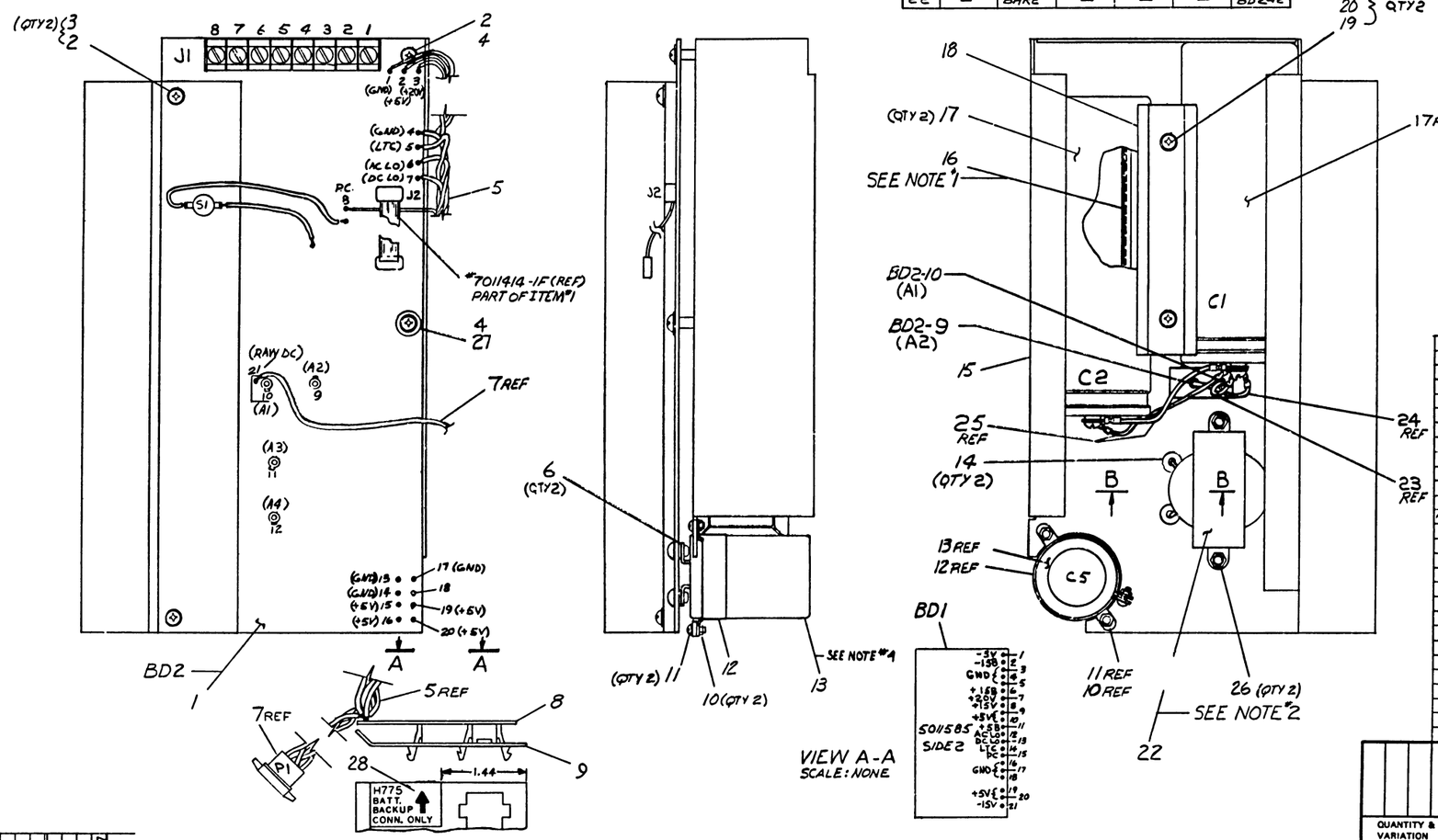

1	DECAL	A-DC-7416911-0-0	28
1	WASHER NYLON #6	9006707	27
2	NUT KEPS #8-32	9006563	26
2	JUMPER (GRN)	B-IA-7011800-0-0	25
1	JUMPER (BLK)	B-IA-7011802-0-0	24
1	JUMPER (RED)	B-IA-7011801-0-0	23
1	CHOKE	1612584	22
2	SPACER HEX #8-32 X 1.38L	9008258	21
2	WASHER INT TOOTH LOCK #8	9006634	20
2	SCR PHIL HD PAN #8-32 X .50L	9006037-1	19
1	CLAMP CAPACITOR	C-MD-7414021-0-0	18
2	CAPACITOR 24 KUF 50V	1010702	17
A/R	GROMMET CATERPILLAR	9007035	16
1	BRACKET CAPACITOR	E-IA-7413743-0-0	15
2	GROMMET RUBBER	9007017	14
1	CAPACITOR 39000UF/6.0V (GS)	1012790	13
1	CLAMP CAPACITOR	9009052	12
2	SCR PHIL PAN HD #6-32 X .25L	9006020-1	11
2	NUT KEPS #6-32	9008185	10
1	BRACKET CONN	D-IA-7413752-0-0	9
1	BOARD, PWR DISTR. H777	D-CS-5411586-0-1	8
1	HARNESS BD MOS REG PWR DIST	D-IA-7011560-0-0	7
2	WASH, .375 O.D. X .167 ID X .036	9006660	6
1	HARNESS H777 +5V REG	D-IA-7011415-0-0	5
2	SCR PHIL HD PAN #6-32 X .31L	9006021-1	4
2	SCR PHIL HD PAN #6-32 X .50L	9006024-1	3
3	WASHER, INT TOOTH LOCK #6	9006633	2
1	H777 +5V REGULATOR	D-CS-5411597-0-1	1
	DESCRIPTION	DWG./PART NO.	ITEM NO.

UNLESS OTHERWISE SPECIFIED DIMENSIONS ARE IN INCHES

ANGLES ±0° 30'	CLASS OF ACCURACY (CHECK ONE)	NOMINAL DIMENSION RANGE INCHES: OVER 0 TO 0.3	OVER 0.3 TO 1.2	OVER 1.2 TO 4.0	OVER 4.0 TO 12.0	OVER 12.0 TO 40.0	OVER 40.0 TO 80.0
SURFACE QUALITY IN MICROINCHES	MEDIUM ☐	±.004	±.008	±.012	±.016	±.024	±.04
	PREFERRED ☐	±.012	±.016	±.025	±.04	±.063	±0.1

QUANTITY & VARIATION

THIRD ANGLE PROJECTION

REMOVE BURRS AND BREAK SHARP CORNERS

DO NOT SCALE DWG

MATERIAL —#—

FINISH —#—

DRN Marquis 9/25/75
CHK'D D. Moody 9/28/75
ENG R. Barry 9-25-75
PROJ. ENG R. Barry 9-25-75
PROD. K. Mosley 9-26-75

NEXT HIGHER ASSY. D-IA-H777-0-0

SCALE —#—

SHEET 1 OF 1

FIRST USED ON H777

digital

TITLE +5V REG ASSY

SIZE D | CODE AD | NUMBER 7011073-0-0 | REV. C

DIST

REVISIONS			
CHK	CHANGE NO.	REV.	
	7011073-00001	A	R. BARRY 11-25-75
	7011073-00002	B	R. BARRY 20 JULY 76
	H777-00002	C	B. COURTEMANCHE 21 JAN 77
			B. COURTEMANCHE 21 JAN 77

THIS DRAWING AND SPECIFICATIONS, HEREIN, ARE THE PROPERTY OF DIGITAL EQUIPMENT CORPORATION, AND SHALL NOT BE REPRODUCED OR COPIED OR USED IN WHOLE OR IN PART AS THE BASIS FOR THE MANUFACTURE OR SALE OF ITEMS WITHOUT WRITTEN PERMISSION. COPYRIGHT © 1975 DIGITAL EQUIPMENT CORPORATION

NOTES:

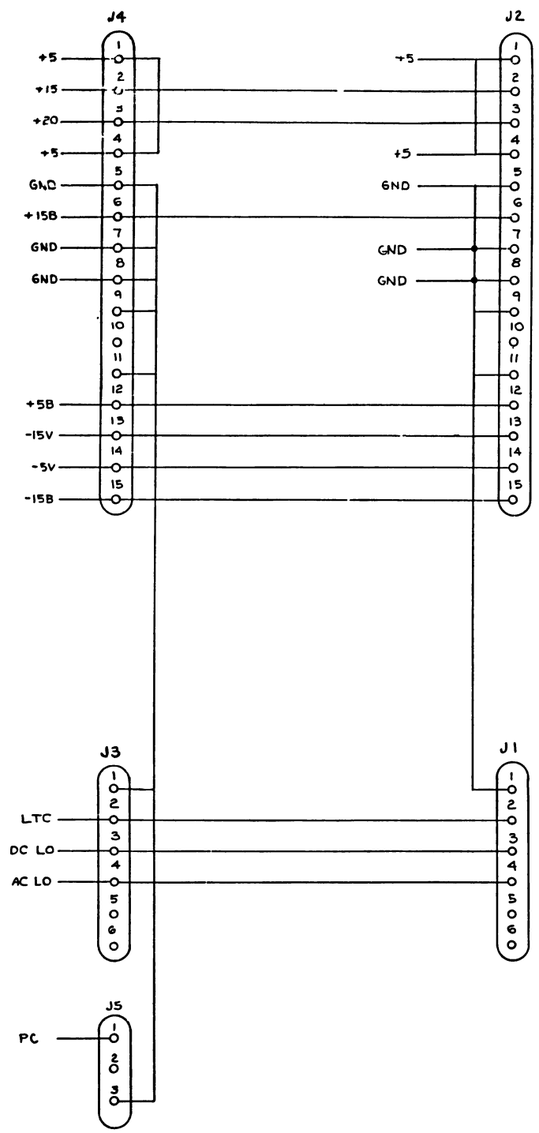

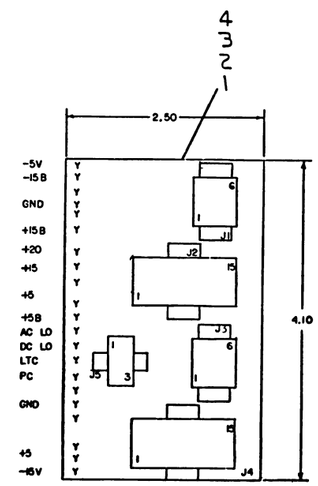

REF		X-Y COORDINATE HOLE LOCATION	K-CO-5411586-0-4	1
REF		ASSY DRILLING HOLE LAYOUT	D-AH-5411586-0-5	2
REF		MODULE ECO HISTORY	B-MH-5411586-0-6	3
1		ETCHED CIRCUIT BOARD	5011585	4
2	J2,J4	CONN.,MATE-N-LOCK,15 PIN HOUSING	1209350-15	5
2	J1,J3	CONN.,MATE-N-LOCK,6 PIN HOUSING	1209350-06	6
45		PIN,CONTACT,MATE-N-LOCK	1209456-01	7
1	J5	CONN.,MATE-N-LOCK,3 PIN HOUSING	1209350-03	8

IC TYPE	GND	+5V
GND AND 5V ARE USUALLY PIN 7 AND 14 RESPECTIVELY EXCEPTIONS ARE STATED ABOVE		

IC PIN LOCATIONS

FIRST USED ON OPTION MODEL
1104 PWR. SUPPLY

QTY	REF DESIGNATION	DESCRIPTION	PART NO	ITEM NO.

PARTS LIST

ETCH BOARD REV D

CHANGE NO	REV	DEC NO.	EIA NO.	DEC NO	EIA NO

REVISIONS

SEMICONDUCTOR CONVERSION CHART

DRN. D. Dillon DATE 04/1/75
CHK'D Ferguson DATE 2-23-75
ENG. R. Ranny DATE 2-2-75
PROJ. ENG. R. Ranny DATE 2-3-75
PROD. DATE

NEXT HIGHER ASSY

SCALE NONE
SHEET 1 OF 1

digital EQUIPMENT CORPORATION MAYNARD MASSACHUSETTS

TITLE BOARD, POWER DISTRIBUTION H777

SIZE D CODE CS NUMBER 5411586-0-1 REV. C

DIST

"THIS DRAWING AND SPECIFICATIONS, HEREIN ARE THE PROPERTY OF DIGITAL EQUIPMENT CORPORATION AND SHALL NOT BE REPRODUCED OR COPIED OR USED IN WHOLE OR IN PART AS THE BASIS FOR THE MANUFACTURE OR SALE OF ITEMS WITHOUT WRITTEN PERMISSION
COPYRIGHT © 1975 DIGITAL EQUIPMENT CORPORATION"

NOTES:

1. HARDWARE ON D1,Q1,Q2,D6,S1,C5 MUST BE TORQUED TO 12 IN-LBS (-Ø,+1)

QTY	REF DESIGNATION	SUBSTITUTION LIST DESCRIPTION	PART NO.	ITEM NO.
1	C19	CAPACITOR, 1.5mf, 50V, POLYCARB	1010031-08	12
1	D1	DIODE	1112723-01	23
8	C6,C9,C11,C20,C24-C27	CAPACITOR, .01mf, 50V	1001610-00	8

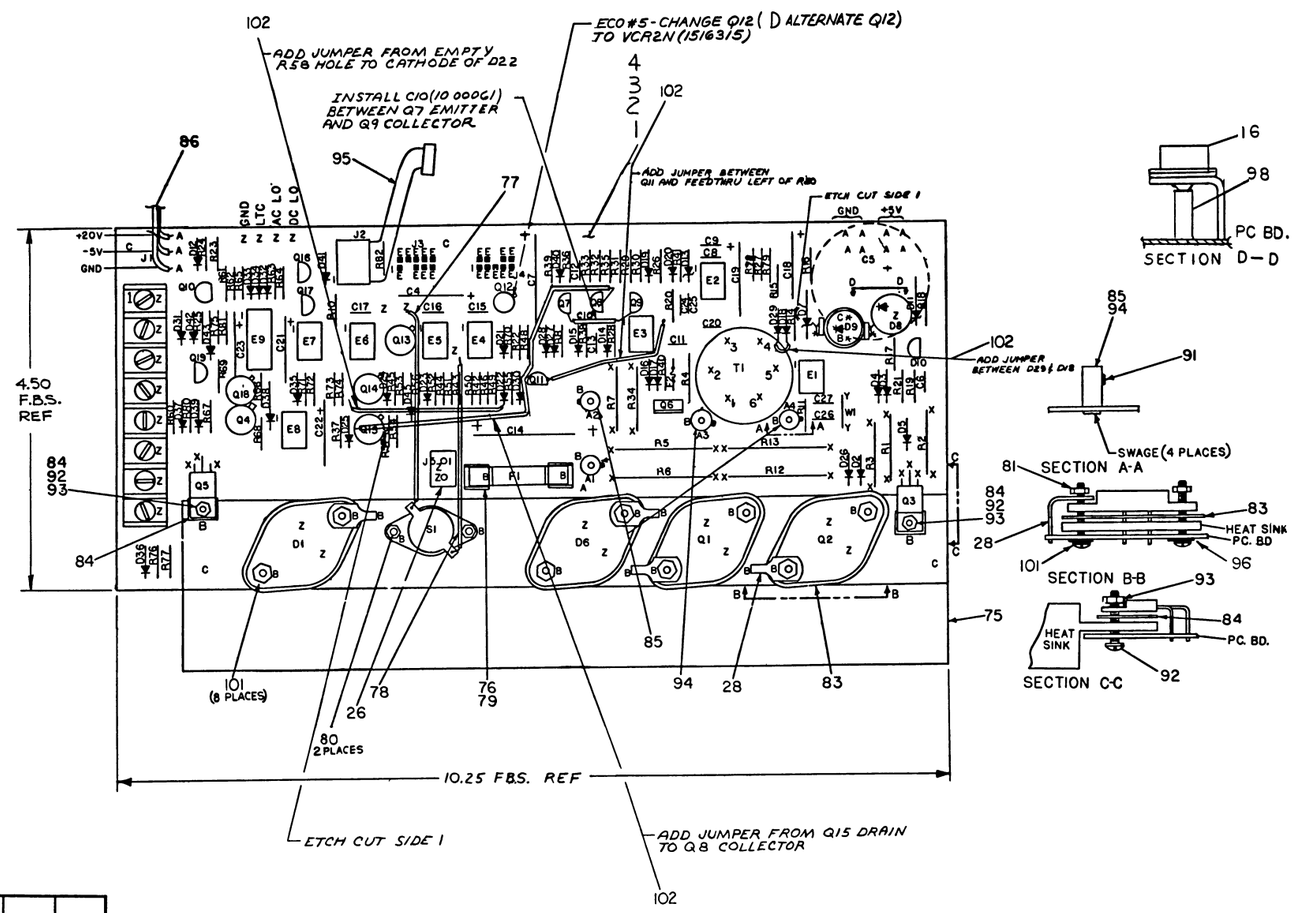

REV.	REF	DESCRIPTION	PART NO.	ITEM NO.
		X-Y COORDINATE HOLE LOCATION	K-CO-5411597-0-4	1
		ASSY/DRILLING HOLE LAYOUT	D-AH-5411597-0-5	2
		MODULE ECO HISTORY	B-MH-5411597-0-8	3
		ETCHED CIRCUIT BOARD	5011596	4
1	C12	CAPACITOR, 100pf, 100V, 5% DM	1000016	5
1	C13	CAPACITOR, 470pf, 100V, 5% DM	1000024	6
1	C14	CAPACITOR, 50mf, 50V, AL.EL	1000080	7
8	C6,C9,C11,C20,C24-C27	CAPACITOR, .01mf, 100V DISC	1001610-01	8
2	C22,C23	CAPACITOR, 1mf, 35V, 10% TANT	1001776	9
3	C15,C16,C17	CAPACITOR, 5pf, 100V, 5% DM	1002425	10
				11
1	C19	CAPACITOR, 1.5mf, 35V, 10% TANT	1009725	12
2	C4,C18	CAPACITOR, 2.2mf, 20V, 10% TANT	1002627	13
2	C7, C21	CAPACITOR, 10mf, 20V, 10% TANT	1004813	14
1	D11	DIODE 1N752A	1102808	15
1	D8	DIODE MR1033B	1103341	16
28	D3,D4,D12,D14 THRU D20,D22 THRU D25,D27,D30 THRU D37 D40,D42,D5,D39,D28	DIODE D672	1105275	17
3	D21,D41 D29	DIODE 1N4004	1105796	18
1	D13	DIODE,ZENER,5.1V,2% IZT = 5ma	1110713	19
1	D6	DIODE,TO3	1110715	20
1	D10	DIODE 2N5062	1110968	21
3	D7,D43,D45	DIODE 1N751A	1110994	22
1	D1	DIODE,DUAL,TO3	1112723-00	23
2	D2,D26	DIODE A114B	1112595-01	24
1	D38	DIODE,ZENER 13V 1N964B	1109988	25
1	J5	CONNECTOR 2 PIN MATE-IN-LOC	1211342-2	26
1	J1	TERMINAL BOARD 8 STATION	1212484-01	27
4		SOLDER LUG	9009676	28
18		PINS, STAKING	9009149	29
1	F2	FUSE 5A	1209070	30
2	R18,R19	RESISTOR, 100, 1/4W, 5%	1300229	31
1	R10	RESISTOR, 150, 1/4W, 5%	1300250	32
1	R2	RESISTOR, 150, 1W, 5%	1300255	33
1	R34	RESISTOR, 220, 1W, 10%	1300277	34
2	R78,R81	RESISTOR, 390, 1/4W, 5%	1300309	35
2	R29 R16	RESISTOR, 470, 1/4W, 5%	1300316	36
7	R82,R28,R38,R50,R69,R52,R54	RESISTOR, 1K, 1/4W, 5%	1300365	37
2	R8, R66	RESISTOR, 2.7K, 1/4W, 5%	1300426	38
7	R31,R60,R62,R65,R68,R15,R39	RESISTOR, 4.7K, 1/4W, 5%	1300447	39
13	R63 R25,R32,R35,R36,R37,R80 R55 THRU R57,R67,R70,R77	RESISTOR, 10K, 1/4W, 5%	1300470	40
1	R24	RESISTOR, 12, 1/4W, 5%	1301430	41
1	R4	RESISTOR, 47, 1/2W, 5%	1301695	42
5	R23 R48,R40,R64,R75	RESISTOR, 270, 1/4W, 5%	1301972	43
2	R72,R74	RESISTOR, 150K, 1/4W, 5%	1302396	44
2	R26,R61	RESISTOR, 2K, 1/4W, 5%	1302388	45
4	R22,R71,R41,R73	RESISTOR, 30K, 1/4W, 5%	1302394	46
3	R49,R51,R53	RESISTOR, 56K, 1/4W, 5%	1302395	47
1	R27	RESISTOR, 100K, 1/4W, 5%	1302466	48
2	R17,R21,	RESISTOR, 30, 1/4W, 5%	1302751	49
2	R43,R44	RESISTOR, 1 21K, 1/4W, 1%	1302871	50
1	R46	RESISTOR, 1K, 1/4W, 1%	1303114	51
1	R33,	RESISTOR, 8.2K, 1/4W, 5%	1303179	52
1	R45	RESISTOR, 10K, 1/8W, 1%	1303312	53

PARTS LIST

QTY	REF. DESIGNATION	DESCRIPTION	PART NO.	ITEM NO.

FIRST USED ON OPTION MODEL

ETCH BOARD REV. E

IC TYPE	GND	+5V
IC 555	1	8

GND AND 5V ARE USUALLY PIN 7 AND 14 RESPECTIVELY EXCEPTIONS ARE STATED ABOVE

IC PIN LOCATIONS

REV.	CHANGE NO.	CHK	REVISIONS
J	5411C37-00004	P.G.	
H	5411597-00003		G POTTER
F	5411597-6.002		J SOFIO
E	5411597-00001		

DEC NO.	EIA NO.	DEC NO.	EIA NO

SEMICONDUCTOR CONVERSION CHART

DRN. G. Vincent DATE 6-30-75
CHKD. DATE 7-1-75
ENG. DATE 9/16/75
PROJ. ENG. DATE 9/18/75
PROD. DATE 10/8/74
NEXT HIGHER ASSY
SCALE —
SHEET 1 OF 4

digital

TITLE H777 +5V REGULATOR

SIZE D CODE CS NUMBER 5411597-Ø-1 REV. L

DIST.

DEC FORM NO. DRD 135.8

"THIS DRAWING AND SPECIFICATIONS, HEREIN ARE THE PROPERTY OF DIGITAL EQUIPMENT CORPORATION AND SHALL NOT BE REPRODUCED OR COPIED OR USED IN WHOLE OR IN PART AS THE BASIS FOR THE MANUFACTURE OR SALE OF ITEMS WITHOUT WRITTEN PERMISSION COPYRIGHT © 1975 DIGITAL EQUIPMENT CORPORATION"

1	R76	RESISTOR, 5.1, 1/4W, 5%	1309422	54
1	R79	RESISTOR, 56 , 1/4W, 5%	1302602	55
1	R42	RESISTOR, 348K, 1/4,W, 1%	1303156	56
2	R1,R7	RESISTOR, .39, 2W, 3%	1310868	57
2	R12,R13	RESISTOR, .02, 5W, 3%	1310878	58
2	R5,R6	RESISTOR, .04, 5W,	1311362	59
1	R3	RESISTOR, 3, 3W, 5%	1312682	60
2	Q1,Q2	TRANSISTOR, 2N5302	1510196	61
3	Q7,Q8,Q10	TRANSISTOR, A05	1510705	62
5	Q9,Q11,Q16,Q17,Q18	TRANSISTOR, A55	1510706	63
2	Q3,Q5	TRANSISTOR, D45H8	1510708	64
4	Q4,Q13 THRU Q15	TRANSISTOR, 2N5433	1511686	65
1	Q19	TRANSISTOR, 2N6028	1510877	66
1	Q6	TRANSISTOR, D44C11	1512790	67
1	D9	TRANSISTOR, C32AX135	1510928	68
1	T1	TRANSFORMER PULSE	1612592	69
1	E9	I.C. DEC 7410	1905576	70
5	E1,E2,E4,E5,E6	I.C. DEC 301A	1910282	71
3	E3,E7,E8	I.C. DEC LM555	1911944	72
1	F1	FUSE 15A, 32V	9007226	73
1	S1	THERMOSTAT (ELMWOOD)	1212787	74
1		HEAT SINK	7414238	75
2		EYELET	9006732	76
3		WIRE, #22 AWG STRANDED (WHITE)	9107350-99	77
3		WIRE, #22 AWG STRANDED (WHITE)	9107350-88	78
2		FUSECLIP	9007203	79
2		SCREW, #4-40 x 7/16 lg PHILLIPS HD	9008012-1	80
10		NUT,KEP #4-40	9006557	81
A/R		COMPOUND, THERMAL	9008268	82
4		INSULATOR, TO3	9008419	83
2		INSULATOR, THERMA-FILM	9009597	84
3	A1,A2,A4	STANDOFF	7414048-0	85
REF		ASSY, HARNESS	7011415-0-0	86
1	W1	WIRE #18 AWG	9009185	87
1	C10	CAPACITOR 8200 PF 100V MYLAR	1000061	88
1	C8	CAPACITOR, 33PF, 100V, 5% DM	1000009	89
				90
4		SET SCREW #6-32 X 1/8 LG.	9006290-10	91
2		SCREW NYLON #4-40 X 1/2 LG.	9006402-4	92
2		NUT NYLON #4-40	9007992	93
1	A3	STANDOFF	7414048-1	94
1	J2	CONTROL CABLE (CONSOLE)	7011414-1F	95
8		WASHER,FLAT	9008172	96
~~2~~		~~WASHER, INT, LOK #4~~	~~9006432~~	~~97~~
1		SPACER, INSULATOR	9007615	98
1	R30	RES 220 ,1/4W, 5%	1300271	99
1	R20	RES 3.3K, 1/4W, 5%	1300439	100
8		SCREW, PHL PAN HD 4-40 x 5/8	9006014-01	101
A/R		JUMPER	9105740-55	102
A/R		WIRE	9107267-09	103
1	Q12	TRANSISTER VCR2N	1516351	104
1	R11	RES 383Ω 1/4W 1%	1305125	105
1	R14	RES 8.0K 1/4W 1%	1305129	106

REVISIONS		
CHK	CHANGE NO	REV

TITLE	SIZE	CODE	NUMBER	REV.
H777 +5V REGULATOR	D	CS	5411597-0-1	L
SCALE —	SHEET 2 OF 4	DIST		

SIZE CODE NUMBER REV
D CS 5411597-0-1 L

"THIS DRAWING AND SPECIFICATIONS, HEREIN, ARE THE PROPERTY OF DIGITAL EQUIPMENT CORPORATION AND SHALL NOT BE REPRODUCED OR COPIED OR USED IN WHOLE OR IN PART AS THE BASIS FOR THE MANUFACTURE OR SALE OF ITEMS WITHOUT WRITTEN PERMISSION
COPYRIGHT © 1973 DIGITAL EQUIPMENT CORPORATION"

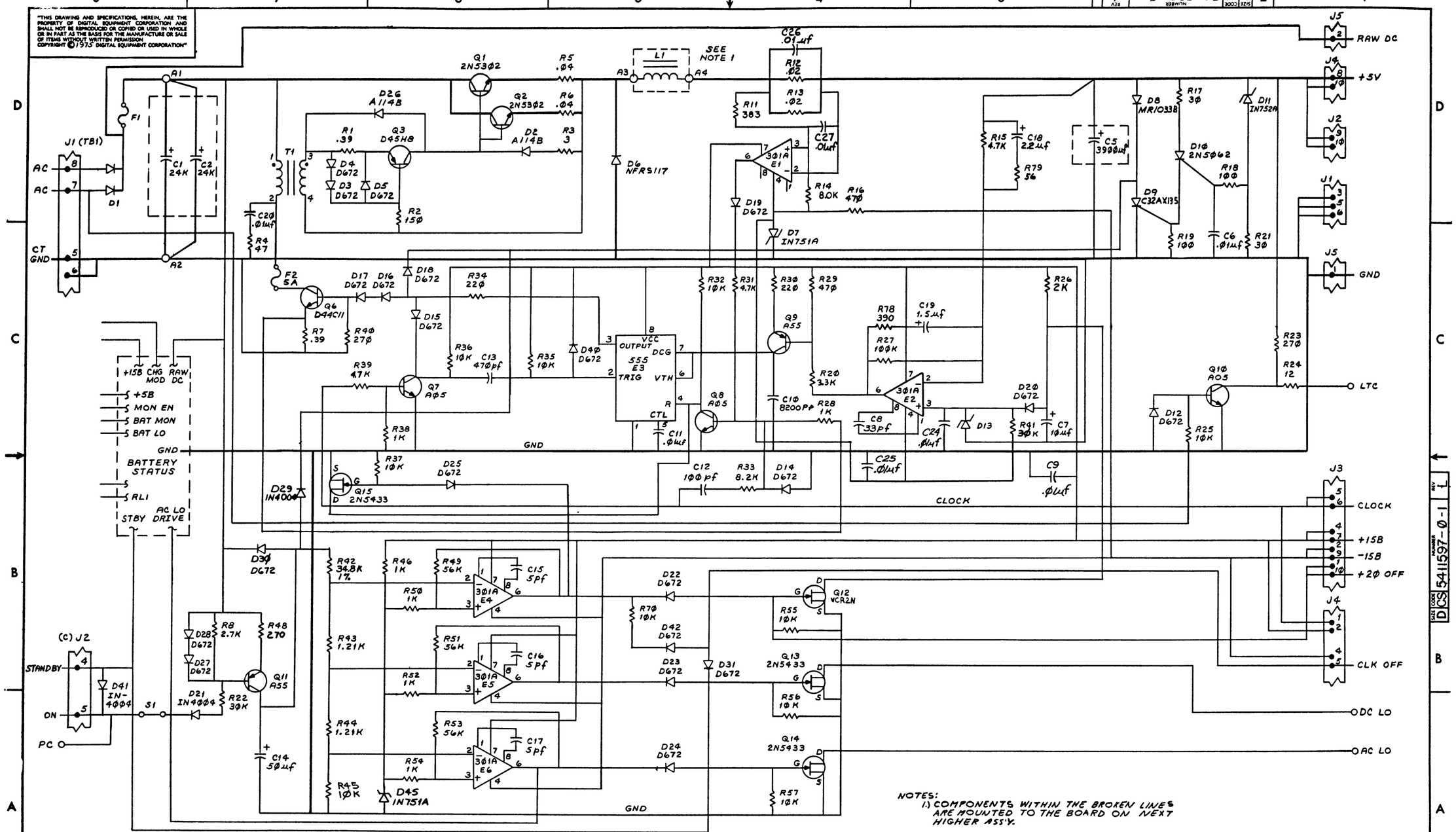

NOTES:
1.) COMPONENTS WITHIN THE BROKEN LINES ARE MOUNTED TO THE BOARD ON NEXT HIGHER ASS'Y.

REVISIONS		
CHK	CHANGE NO	REV

TITLE	SIZE	CODE	NUMBER	REV.
H777 +5V REGULATOR	D	CS	5411597-0-1	L
SCALE —	SHEET 3 OF 4	DIST.		

DEC FORM NO. GRD 138

"THIS DRAWING AND SPECIFICATIONS, HEREIN, ARE THE PROPERTY OF DIGITAL EQUIPMENT CORPORATION AND SHALL NOT BE REPRODUCED OR COPIED OR USED IN WHOLE OR IN PART AS THE BASIS FOR THE MANUFACTURE OR SALE OF ITEMS WITHOUT WRITTEN PERMISSION. COPYRIGHT © 1975 DIGITAL EQUIPMENT CORPORATION"

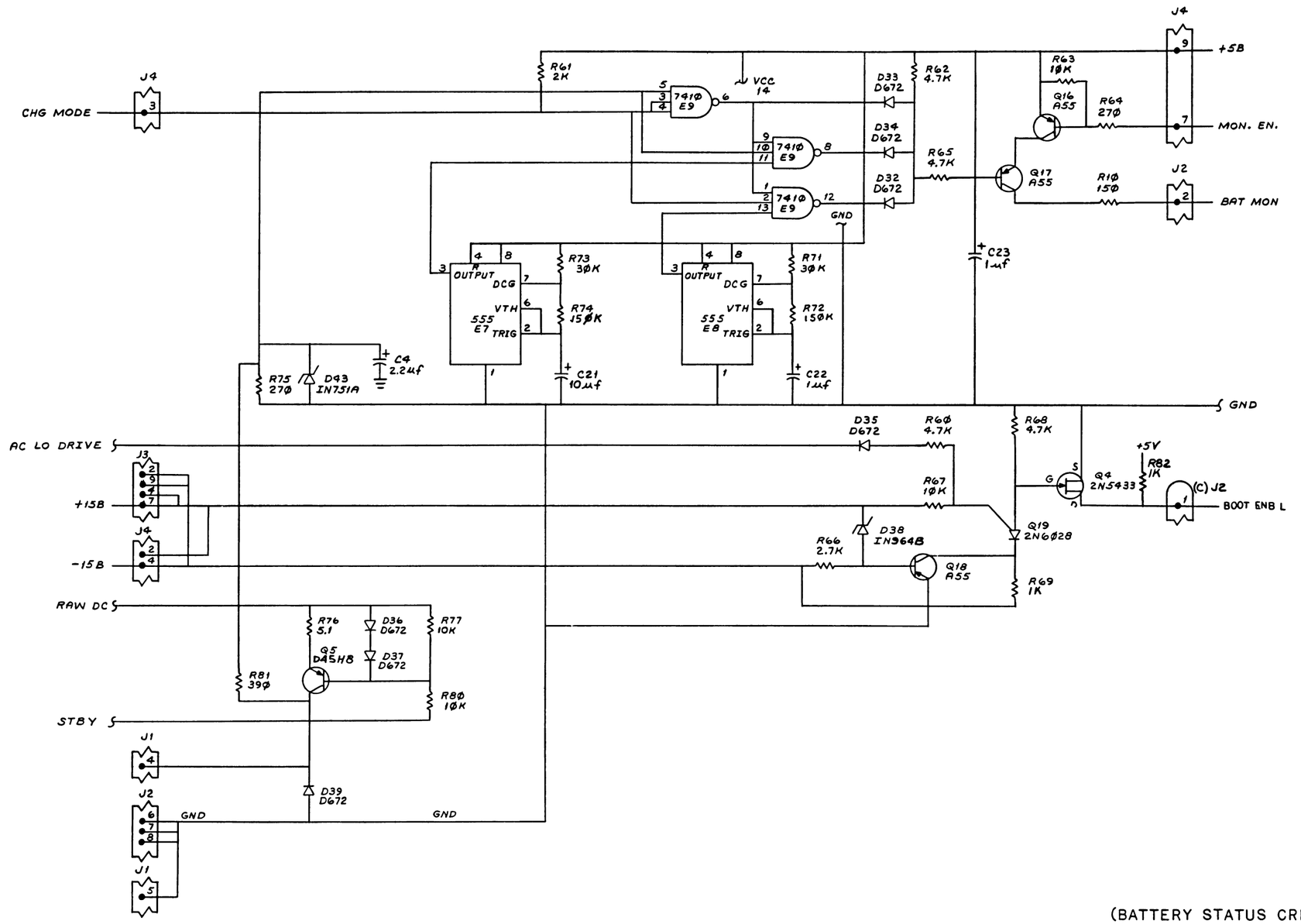

(BATTERY STATUS CRKT'S)

REVISIONS		
CHK	CHANGE NO	REV

TITLE	SIZE	CODE	NUMBER	REV.
H777 +5V REGULATOR	D	CS	5411597-Ø-1	L
SCALE	SHEET 4 OF 4	DIST.		

DEC FORM NO. 1080

"THIS DRAWING AND SPECIFICATIONS, HEREIN, ARE THE PROPERTY OF DIGITAL EQUIPMENT CORPORATION AND SHALL NOT BE REPRODUCED OR COPIED OR USED IN WHOLE OR IN PART AS THE BASIS FOR THE MANUFACTURE OR SALE OF ITEMS WITHOUT WRITTEN PERMISSION. COPYRIGHT © 1975, DIGITAL EQUIPMENT CORPORATION"

LEGEND

PART NO	VARIATION
7011075-0	120 V
7011075-1	230 V

WIRE CHART

ITEM NO	DESCRP AWG	DESCRP COLOR	FROM CONN	FROM WITH	TO CONN	TO WITH	REMARKS
22	18	WHT	K1-4	SOLD,31	*TB2-4S	SOLD	5 1/2" L
23	18	BLK	K1-6	↓	*TB2-1S	SOLD	5" L
24	18	BRN	K1-7		TB2-5H	25,43	6 1/2" L
26	18	BLU	K1-9		TB2-6H	25,43	7 1/2" L
27 (SEE NOTE #2)	18	GRY	K1-A	↓	—	25	
	TWP	BLK	K1-3	SOLD,31	—	25	
26	18	BLU	G2	SOLD	*TB2-6S	SOLD	6" L
23	18	BLK	F1-1	SOLD,31	*TB2-1S	SOLD	5" L
15 (SEE NOTE #1 & #2.)	18	BLU	EMI-2 LOAD	—	*TB2-4S	SOLD	6" L
	TWP	BRN	EMI-1 LOAD	—	*TB2-6S	SOLD	6" L
22	18	WHT	EMI-2	SOLD,31	CB1-2 LOAD	28,41	5" L
23	18	BLK	EMI-1	SOLD,31	CB1-1 LOAD	28,41	5" L
45 (SEE NOTE #2 SEE DETAIL 'C')	18	WHT	*TB2-5S	SOLD	J2-1	30,32	6 1/2" L
	TWP	BLK	*TB2-2S	SOLD	J2-2	30,32	6 1/2" L
45	18	WHT	*TB2-5S	SOLD	J3-1	30,32	15 1/2" L
	TWP	BLK	*TB2-2S	SOLD	J3-2	30,32	15 1/2" L

* INDICATES SOLDER CONN. SHARED WITH OTHER CONN. WITH SAME COMMON CONN.

ITEM NO	DESCRP AWG	DESCRP COLOR	FROM CONN	FROM WITH	TO CONN	TO WITH	REMARKS		
1	14	BLK	T1	43	TB2-1H	—	—		
	TWP	BR/WH	↓		TB2-3H	—	—		
	14	RED	↓		TB2-2H	—	—		
	TWP	RD/WH	T1		TB2-4H	—	—		
23	18	BLK	G3	SOLD	F1-2	SOLD,31	4" L		
34	14	GRN/YEL	EMI-3	SOLD,31	—	42	8" L		
35	18	BLK	TB2-1H	—	TB2-2H	—	120V	7011075-0	120V
36	18	WHT	TB2-3H	—	TB2-4H	—	120V		
35	18	BLK	TB2-2H	—	TB2-3H	—	230V	7011075-1	230V
13	22	BARE	R1-A	—	G3	SOLD,33			
13	22	BARE	R1-B	—	G2	SOLD,33			

NOTES:

1. SECOND SOURCE FOR ITEM #15 (LINE FILTER) WILL HAVE WHT & BLK LEADS. SUBSTITUTE WHT FOR BLU AND BLK FOR BRN.
2. TWISTED PAIR WIRE TO HAVE A MIN OF 4 TWIST PER INCH AS PER WIRE CHART.
3. ALL CONNECTIONS TO TB2 ARE TO BE MADE FROM SIDE INDICATED BY ARROW.
4. USE TIE WRAPS (ITEM #38) AS NEEDED.
5. T1 PRIMARY WIRES TO TB2 MUST BE ROUTED BY ITEM 4
6. COVER, ITEM #28 WITH ITEM #41 TO COVER EXPOSED PART OF TERMINAL.

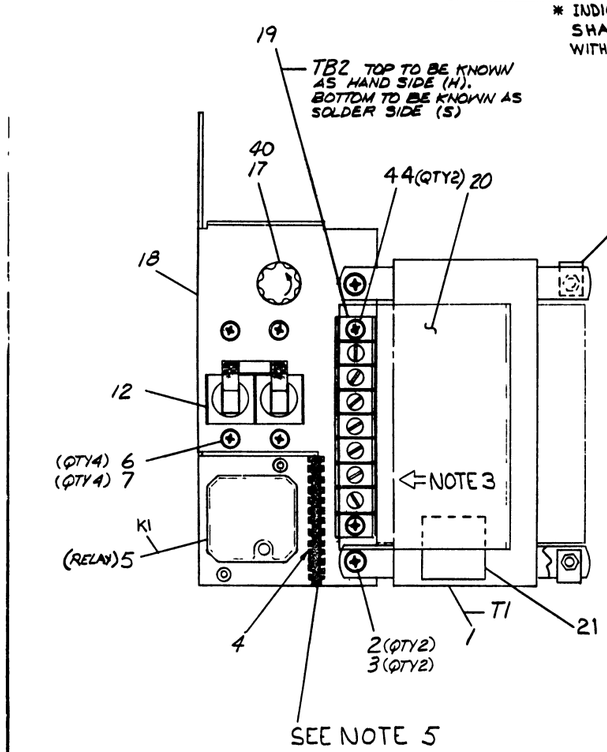

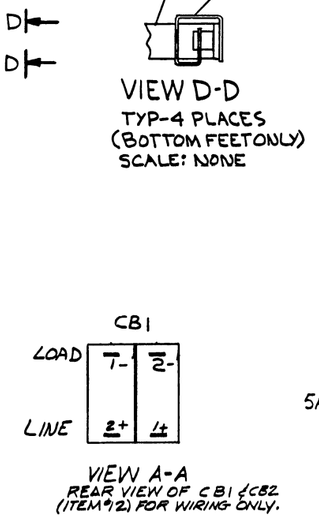

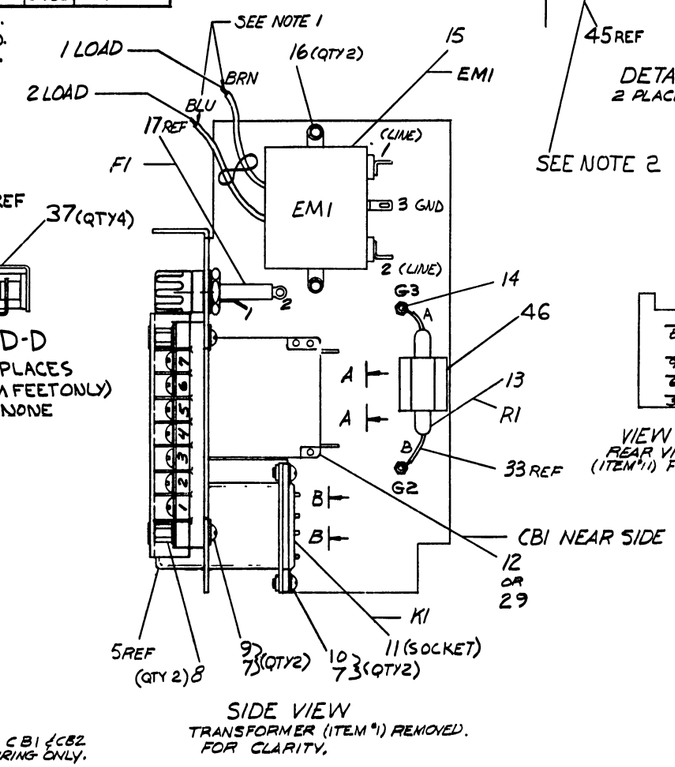

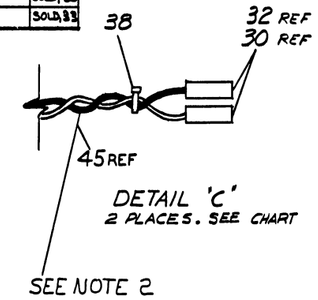

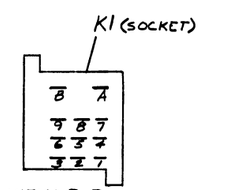

		CONT. ON SHEET 2 of 2		
–	1	JUMPER ASSY (WHT 2")	B-IA-7011798-0-0	36
1	1	JUMPER ASSY (BLK 2")	B-IA-7011797-0-0	35
A/R	A/R	WIRE #18 AWG TRACER (GRN/YEL)	9107777-54	34
A/R	A/R	TUBING INS (RED)	9107278-02	33
4	4	HOUSING SOCKET FASTAB	1210820-1	32
A/R	A/R	TUBING SHRINK (RED)	9107305-02	31
4	4	HOUSING TERM FASTAB	1210820-2	30
1	–	CIRCUIT BREAKER, 5A	1210191-1	29
2	2	CONN FASTON (RED INS)	9007970	28
A/R	A/R	WIRE 18 AWG INS (GRY/BLK)	9107430-08	27
A/R	A/R	WIRE 18 AWG INS (BLU)	9107360-66	26
2	2	RING CRIMP (RED INS)	9007929	25
A/R	A/R	WIRE 18 AWG INS (BRN)	9107360-11	24
A/R	A/R	WIRE 18 AWG INS (BLK)	9107360-00	23
A/R	A/R	WIRE #18 AWG INS (WHT)	9107360-99	22
1	1	MOUNT TIE WRAP	9008264	21
1	1	SHIELD TERM	C-IA-7414743-0-	20
1	1	TERMINAL 7 POS	1212788	19
1	1	BRACKET COMPONENT	D-IA-7413769-0-0	18
1	1	HOLDER, FUSE	9007242-0	17
2	2	NUT KEPS #6-32	9009243	16
1	1	FILTER LINE (EMI)	1212748	15
2	2	TERMINAL TURRET INS	9006966	14
1	1	RESISTOR 10Ω, 10W	1300173	13
–	1	CIRCUIT BREAKER, 10A	1210191-0	12
1	1	SOCKET, RELAY	1212789	11
2	2	SCR PHIL HD PAN #6-32 X .25	9006021-01	10
2	2	SCR PHIL HD PAN #6-32 X .62	9006026-01	9
2	2	SPACER HEX #6-32 X .19	9006842	8
8	8	WASHER INT TOOTH LOCK #6	9006633	7
4	4	SCR PHIL HD PAN #6-32 X .19	9006020-01	6
1	1	RELAY 6 & 12 V 3P 10A	1210683	5
A/R	A/R	GROMMET CATERPILLAR	9007035	4
2	2	WASHER INT TOOTH LOCK #8	9006634	3
2	2	SCR PHIL PAN HD #8-32 X .44	9006038-1	2
1	1	TRANSFORMER ASSY	C-IA-7011805-0-0	1
7011075-1	7011075-0	DESCRIPTION	DWG./PART NO.	ITEM NO.

QUANTITY & VARIATION

UNLESS OTHERWISE SPECIFIED DIMENSIONS ARE IN INCHES

ANGLES ±0° 30'

SURFACE QUALITY IN MICROINCHES

GLASS OF ACCURACY (CHECK ONE): MEDIUM ±.005 ±.008 ±.012 ±.016 ±.024 ±.04; PRESERVED ±.012 ±.016 ±.025 ±.04 ±.063 ±0.1

NOMINAL DIMENSION RANGE INCHES: OVER 0 TO 0.3; OVER 0.3 TO 1.2; OVER 1.2 TO 3.0; OVER 3.0 TO 12.0; OVER 12.0 TO 40.0; OVER 40.0 TO 80.0

THIRD ANGLE PROJECTION

REMOVE BURRS AND BREAK SHARP CORNERS

DO NOT SCALE DWG

MATERIAL —//—

FINISH —//—

DRN. R. Barry 9/8/75

CHK'D. 9-8-75

ENG. 9-8-75

PROJ. ENG. 9-25-75

PROD. 9-26-75

NEXT HIGHER ASSY. D-IA-H777-0-0

SCALE ///

SHEET 1 OF 2

FIRST USED ON H777

TITLE A/C INPUT ASSY (120V/230V)

SIZE D CODE AD NUMBER 7011075-0-0 REV. C

DIST.

REVISIONS			
CHK.	CHANGE NO.	REV.	
	7011075-00001	A	
R. BARRY			8-27-75
	7011075-00002	B	2-DEC-76
R. BARRY			12-9-75
	7011075-00003	C	23 NOV 77
A BARON			11-29-77

"THIS DRAWING AND SPECIFICATIONS, HEREIN, ARE THE PROPERTY OF DIGITAL EQUIPMENT CORPORATION AND SHALL NOT BE REPRODUCED OR COPIED OR USED IN WHOLE OR IN PART AS THE BASIS FOR THE MANUFACTURE OR SALE OF ITEMS WITHOUT WRITTEN PERMISSION.
COPYRIGHT © 1975 DIGITAL EQUIPMENT CORPORATION"

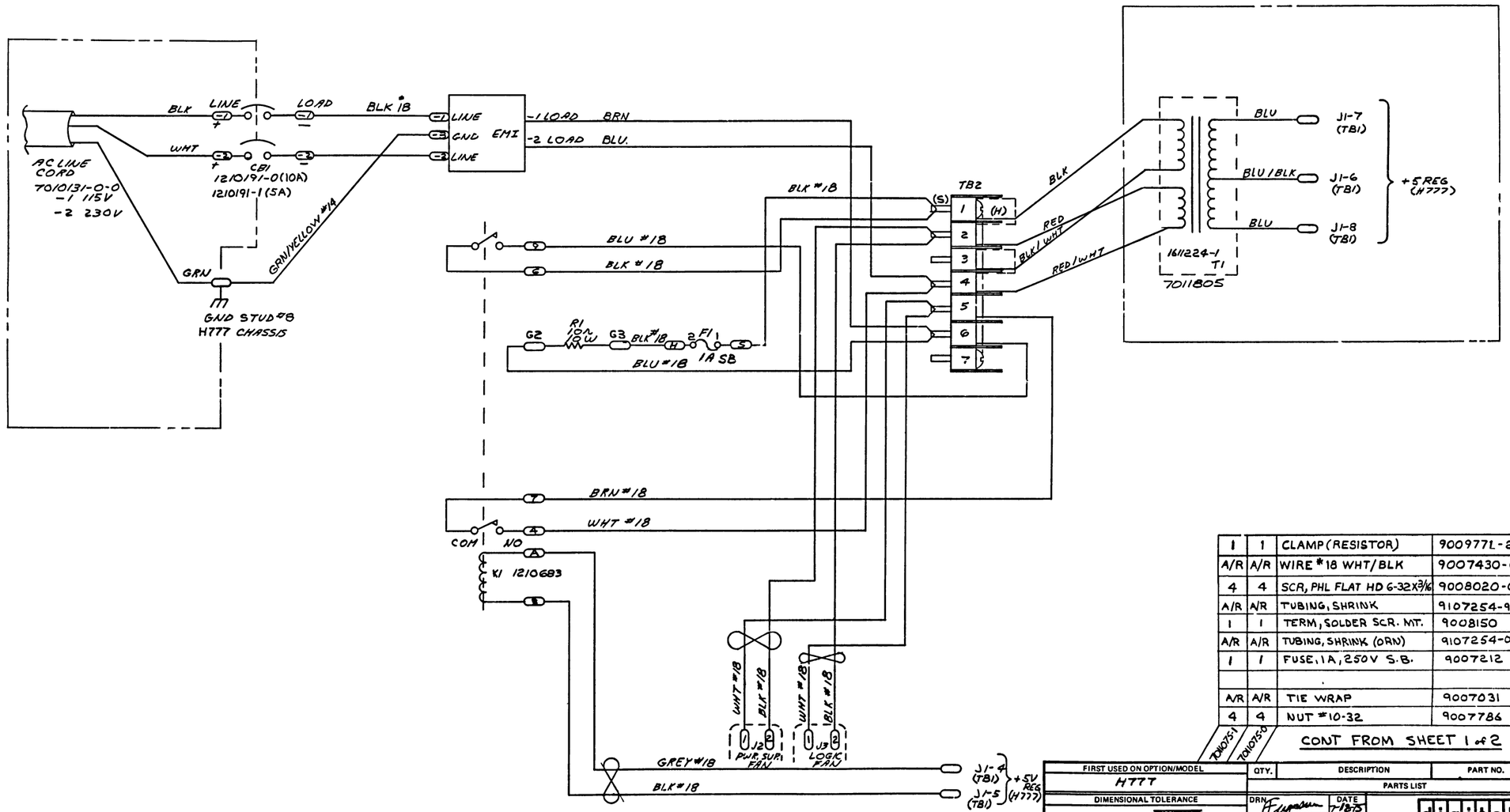

1	1	CLAMP (RESISTOR)	9009771-2	46
A/R	A/R	WIRE #18 WHT/BLK	9007430-09	45
4	4	SCR, PHL FLAT HD 6-32X3/16	9008020-02	44
A/R	A/R	TUBING, SHRINK	9107254-9	43
1	1	TERM, SOLDER SCR. MT.	9008150	42
A/R	A/R	TUBING, SHRINK (ORN)	9107254-02	41
1	1	FUSE, 1A, 250V S.B.	9007212	40
A/R	A/R	TIE WRAP	9007031	38
4	4	NUT #10-32	9007786	37
7011075-1	7011075-0	CONT FROM SHEET 1 of 2		

QTY.	DESCRIPTION	PART NO.	ITEM NO

PARTS LIST

FIRST USED ON OPTION/MODEL: H777

DIMENSIONAL TOLERANCE
DIMENSIONS ARE [redacted] INCHES UNLESS OTHERWISE SPECIFIED

MILLIMETERS	INCHES	ANGLES
X.XX ±0.10, X.X ±0.5, X ±2	.XXX ±.005, .XX ±.02, .X ±.1	±0° 30'

THIRD ANGLE PROJECTION

REMOVE BURRS AND BREAK SHARP CORNERS SURFACE QUALITY ✓

MATERIAL

FINISH

		DATE
DRN.	F. Hagelman	7-18-75
CHKD.	W. Kang	9/26/75
ENG.	R. Barry	9-25-75
PROJ. ENG.	R. Barry	9-25-75
PROD.	E. Kistler	10/7/75

NEXT HIGHER ASSY.

SCALE

SHEET 2 OF 2

digital

TITLE: A/C INPUT ASSY (120V/230V)

SIZE	CODE	NUMBER	REV.
D	AD	7011075-0-0	C

DIST

REVISIONS: REV | CHANGE NO. | CHK

"THIS DRAWING AND SPECIFICATIONS, HEREIN, ARE THE PROPERTY OF DIGITAL EQUIPMENT CORPORATION AND SHALL NOT BE REPRODUCED OR COPIED OR USED IN WHOLE OR IN PART AS THE BASIS FOR THE MANUFACTURE OR SALE OF ITEMS WITHOUT WRITTEN PERMISSION
COPYRIGHT © 1975 DIGITAL EQUIPMENT CORPORATION"

NOTES:

1. SEE PARTS LIST FOR CURRENT HDW. D7,D8,D21
2. USE TRANSIPAD DEC#9007201 UNDER Q3,Q11,Q17,Q18
3. TORQUE Q1,Q9, D7, D8, D11, & D21 HARDWARE TO 6-8 IN-LBS.

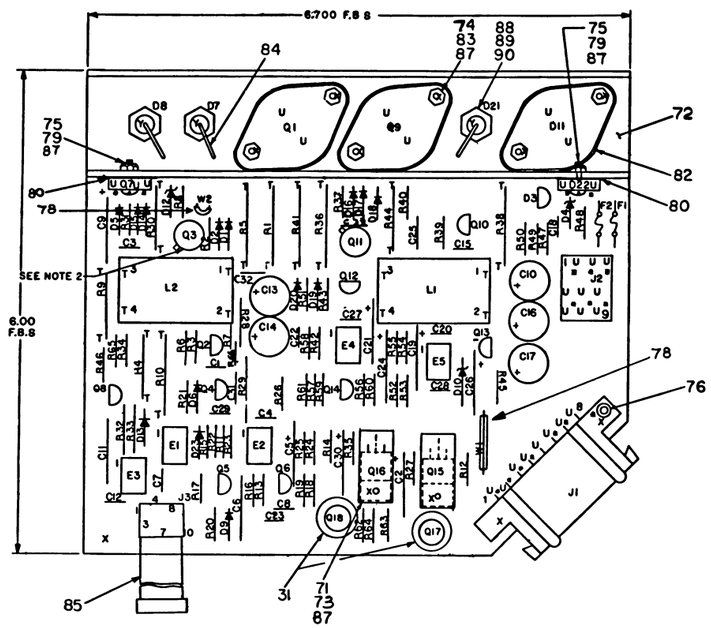

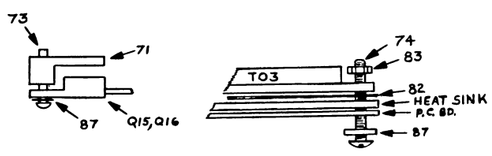

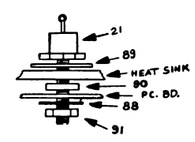

SIDE VIEW MOUNTING D7,D8 AND D21

1	R18	RESISTOR, 8.2K, 1/4W, 5%	1303179	51	REF		X-Y COORDINATE HOLE LOCATION	K-CO-5411601-0-4	1
1	R28	RESISTOR, 4.99K, 1/4W, 1% MF	1305324	52	REF		ASSY/DRILLING HOLE LAYOUT	D-AH-5411601-0-5	2
2	R1,R36	RESISTOR, 1, 2W, 5% WW	1305428	53	REF		MODULE ECO HISTORY	B-MH-5411601-0-6	3
1	R55	RESISTOR, 5/1, 1/4W, 5%	1309422	54	1		ETCHED CIRCUIT BOARD	5011600	4
1	R5	RESISTOR, .15Ω, 2W, 10%	1310147	55	2	C20,C4	CAPACITOR, 33pf, 100V, 5%	1000009	5
1	R32	RESISTOR, 2.21K, 1/4W, 1%	1310631	56	1	C8	CAPACITOR, 100pf, 100V, 5%	1000016	6
1	D22	DIODE 2N4441 SCR	1505867	57	1	C7,	CAPACITOR, 220pf, 100V, 5%	1000021	7
3	Q3,Q11,Q17	TRANSISTOR, 2N4036	1509700	58	1	C25	CAPACITOR, .1mf, 100V, 20% DISC	1000030	8
1	Q18	TRANSISTOR, DEC 3734	1510082	59	7	C3,C12,C18,C27,C28,C32, C33	CAPACITOR, .01mf, 100V, DISC	1001810-01	9
1	Q7	TRANSISTOR, MJE3055	1510555	60					
7	Q4,Q5,Q6,Q8,Q12 THRU Q14	TRANSISTOR, XA05	1510705	61	6	C2,C5,C9,C19,C26,C30	CAPACITOR, 1mf, 35V, 10%	1001776	10
2	Q2,Q10	TRANSISTOR, XB55	1510706-1	62	2	C29,C31	CAPACITOR, .47mf, 25V, 20%	1010279	11
1	Q16	TRANSISTOR, D45H8	1510708	63	1	C24	CAPACITOR, 10mf, 20V, 10%	1004813	12
2	Q1,Q9	TPANSISTOR, 2N5038	1510969	64	2	C6,C21	CAPACITOR, .01mf, 100V, 10% MYLAR	1005784	13
1	Q15	TRANSISTOR, D44H5	1512722	65	1	C11	CAPACITOR, .015mf, 50V, 2% POLYC	1010646	14
2	L1,L2	INDUCTOR, 500uh	1812593	66	2	C13,C14	CAPACITOR 390mf, 20V	1012607-06	15
2	E2,E5	I.C. L.M. 301A	1910282	67	1	C17	CAPACITOR, 1200mf, 6.3V	1012607-01	16
3	E1,E3,E4	I.C. L.M. 555	1911944	68	2	C10,C16	CAPACITOR, 180mf, 50V	1012607-02	17
1	C22	CAPACITOR, 470pf, 100V, 5%	1000024	69	1	D4	DIODE IN752A	1102808	18
1	C23	CAPACITOR, 180pf, 100V 5%	1000020	70	11	D1,D2,D6,D13 THRU D17,D19, D20,D23	DIODE D672	1105275	19
2		HEAT SINK	7414765	71					
1		HEAT SINK	7413842	72	1	D9	DIODE IN4004	1105798	20
2		SCREW #4-40 x 7/16 LG	9006012-1	73	3	D7,D8,D21	DIODE, IN3880	1109440	21
6		SCREW #4/40 x 1/2 LG.	9006013-1	74	1	D12	DIODE IN4742	1109502	22
2		SCREW, NYLON #4/40 x .375LG.	9006401-4	75	1	D10	DIODE Izt 5ma 5.1V, 2%	1110713	23
1		EYELET	9009000	76	1	D3	DIODE 2N5062	1110868	24
4		TRANSIPAD	9007201	77	2	D5,D18	DIODE A114B	1112595-01	25
A/R		TUBING	9107256-11	78	1	D11	DIODE DUAL	1112723-00	26
2		NUT, NYLON #4/40	9007992	79	2	F1,F2	FUSE 5A	1209070	27
2		SILPAD TO 22	1213071-06	80	1	J1	CONN. 8 PIN MATE-N-LOC	1209340-00	28
A/R		THERMAL COMPOUND	9008268	81	1	J2	CONN. 9 PIN MATE-N-LOC	1209350-09	29
3		SILPAD TO 3	1213071-02	82	17		PINS	1209456-01	30
6		NUT, KEP #4/40	9006557	83	2	(Q18),(Q17)	HEAT SINK	1210001	31
A/R		WIRE #20 AWG STRANDED	9107460-68	84	4	R2,R37,R47,R50	RESISTOR, 33, 1/4W, 5%	1300197	32
1	J3	CONTROL CABLE	7011414-DD	85	2	R12,R14	RESISTOR, 68, 1/4W, 5%	1300219	33
~~2~~		~~WASHER, LOCK, INTERNAL TOOTH #4~~	~~9006832~~	~~86~~	8	R6,R27,R35,R39,R48,R49,R63, R64	RESISTOR, 100, 1/4W, 5%	1300229	34
10		WASHER, FLAT	9008172	87					
3		WASHER, FLAT	9006666	88	2	R9,R44	RESISTOR, 100, 1W, 5%	1300232	35
3		SILPAD, STUD MOUNT	1213071-05	89	1	.R52	RESISTOR, 390, 1/4W, 5%	1300309	36
3		BUSHING, NYLON	9008440	90	7	R19,R20,R54,R59,R60,R62,R25	RESISTOR, 1K, 1/4W, 5%	1300365	37
3		NUT, HEX #10-32	9006565	91	1	R45	RESISTOR, 1.5K, 1/4W, 5%	1300391	38
					1	R29	RESISTOR, 2.49K, 3/4W, 1%	1300424	39
AR	W1,W2	WIRE, #20 AWG. SOLID	9107560-02	93	3	R11,R43,R61	RESISTOR, 2.7K, 1/4W, 5%	1300426	40
1		LABEL, POWER SUPPLY	9009255-00	94	2	R7,R65	RESISTOR, 4.7K, 1/4W, 5%	1300447	41
2		TIE, CABLE	9007031	95	2	R23,R56	RESISTOR, 5.62K, 1/4W, 1%	1305128	42
2	C1,C15	CAPACITOR, .02UF, 100V, DISC.	1000004	96	11	R13,R15,R16,R17,R21,R22,R42 R46,R51,R57,R58	RESISTOR, 10K, 1/4W, 5%	1300479	43
1	R3	RESISTOR, 56, 1/4W, 5%	1302602	97					
1	R33	RESISTOR, 2.49K, 1/4W, 1%	1312626	98	2	R53,R24	RESISTOR, 100K, 1/4W, 5%	1302466	44
1	R38	RESISTOR, .10Ω, 2W, 10%	1316012	99	3	R8,R31,R40	RESISTOR, 10, 1/4W, 5%	1301317	45
					2	R10,R41	RESISTOR, 330, 2W, 10%	1301961	46
					2	R26,R34	RESISTOR, 2K, 1/4W, 5%	1302388	47
					1	R66	RESISTOR, 180, 1/4W, 5%	1301322	48
					1	R4	RESISTOR, 1.2K, 1W, 10%	1302950	49
					.1	R30	RESISTOR, 1.8K, 1W, 5%	1303122	50
QTY	REF. DESIGNATION	DESCRIPTION	PART NO.	ITEM NO.	QTY	REF. DESIGNATION	DESCRIPTION	PART NO.	ITEM NO.

PARTS LIST

ETCH BOARD REV. E

ALTERNATE PARTS LIST

1		EYELET	9006732	76
7	C3,C12,C18,C27,C28,C32,C33	CAPACITOR .01 MF 50V	1001810-00	9
QTY	REF. DESIGNATION	DESCRIPTION	PART NO.	ITEM NO.

FIRST USED ON OPTION MODEL

IC TYPE	GND	+5V

GND AND 5V ARE USUALLY PIN 7 AND 14 RESPECTIVELY EXCEPTIONS ARE STATED ABOVE

IC PIN LOCATIONS

REV.	CHANGE NO.	REVISIONS
J	5411601-00004	23-Jul-76 G. POTTER
H	5411601-00003	6/4/76 G. POTTER
G	5411601-00002	12-10-75 RICHARD BARRY
E	5411601-00001	12.6.75 RICHARD BARRY

DEC NO.	EIA NO.	DEC NO.	EIA NO.

SEMICONDUCTOR CONVERSION CHART

DRN. A. Blodgett DATE 5-28-75
CHKD. DATE
ENG. DATE 9/22/75
PROJ. ENG. DATE 9/22/75
PROD. DATE 10/8/75
NEXT HIGHER ASSY
SCALE
SHEET 1 OF 3

digital

TITLE MOS REGULATOR H777

SIZE	CODE	NUMBER	REV.
D	CS	5411601-0-1	N

DIST.

N 5411601-0-1 D CS 2

"THIS DRAWING AND SPECIFICATIONS, HEREIN, ARE THE PROPERTY OF DIGITAL EQUIPMENT CORPORATION AND SHALL NOT BE REPRODUCED OR COPIED OR USED IN WHOLE OR IN PART AS THE BASIS FOR THE MANUFACTURE OR SALE OF ITEMS WITHOUT WRITTEN PERMISSION. COPYRIGHT © 1975 DIGITAL EQUIPMENT CORPORATION"

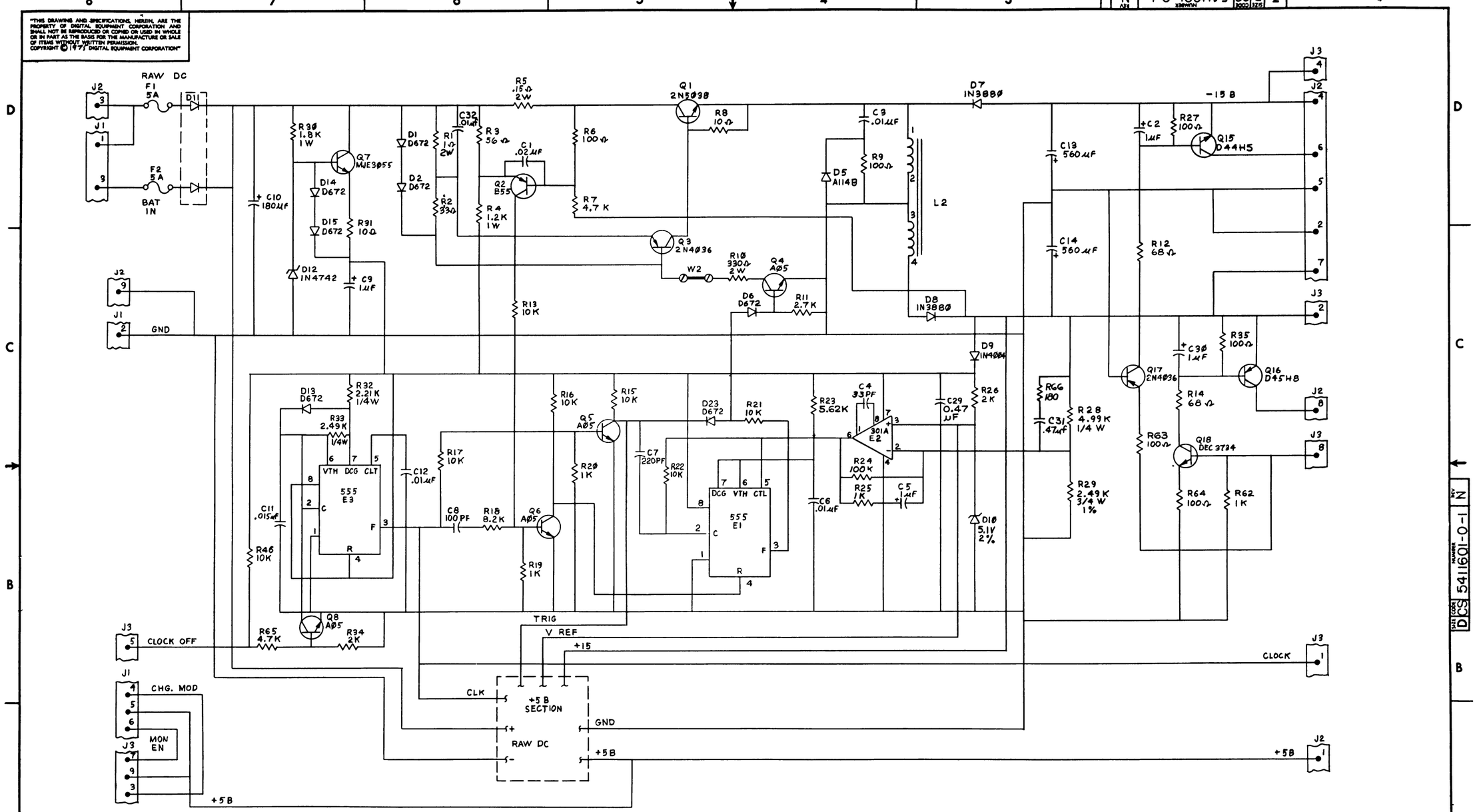

REVISIONS		
CHK	CHANGE NO	REV

TITLE	SIZE	CODE	NUMBER	REV.
MOS REGULATOR H777	D	CS	5411601-0-1	N
SCALE —	SHEET 2 OF 3	DIST.		

DEC FORM NO. 9RD 138

"THIS DRAWING AND SPECIFICATIONS, HEREIN, ARE THE PROPERTY OF DIGITAL EQUIPMENT CORPORATION AND SHALL NOT BE REPRODUCED OR COPIED OR USED IN WHOLE OR IN PART AS THE BASIS FOR THE MANUFACTURE OR SALE OF ITEMS WITHOUT WRITTEN PERMISSION
COPYRIGHT © 1975 DIGITAL EQUIPMENT CORPORATION"

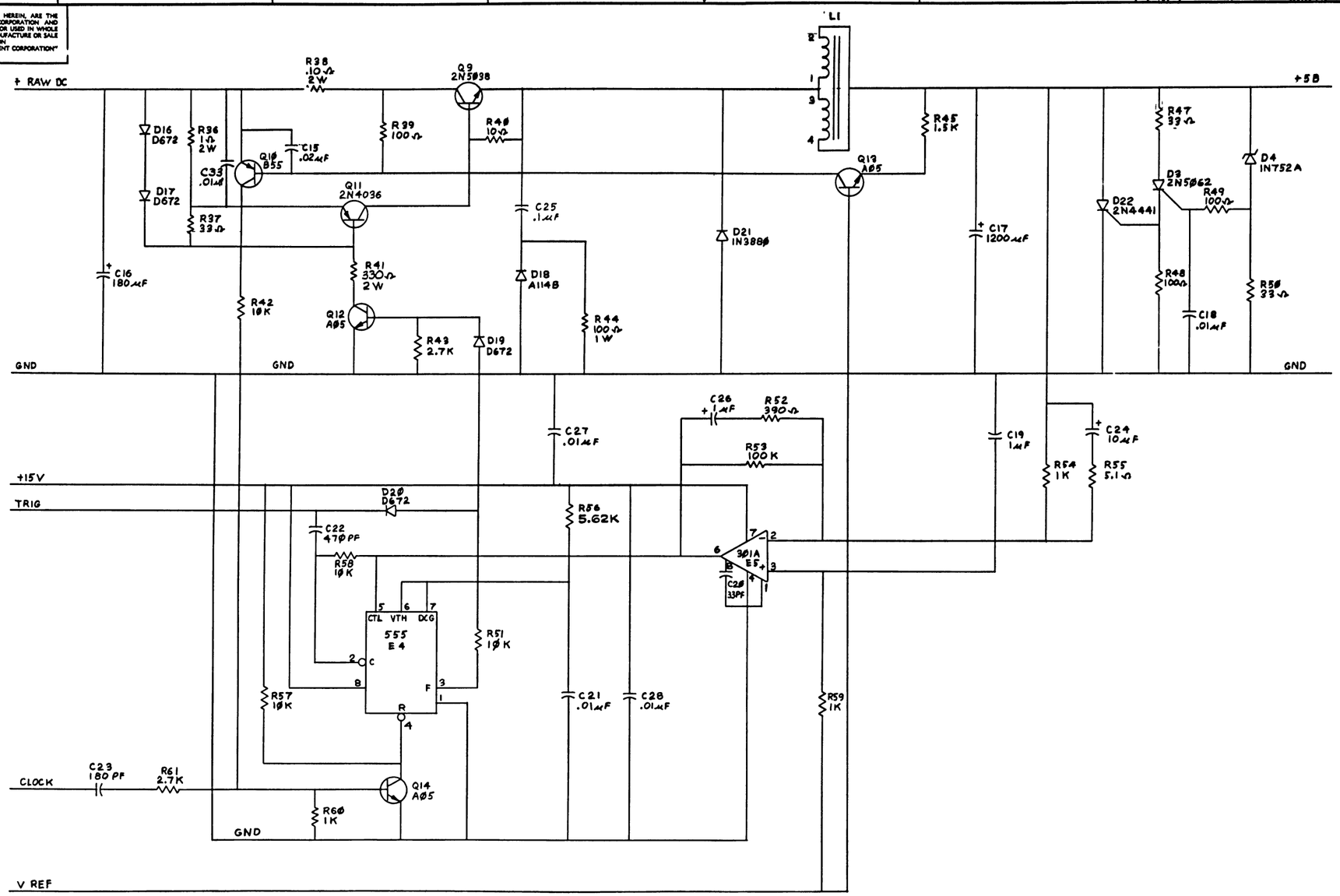

REVISIONS		
CHK	CHANGE NO	REV

TITLE	SIZE	CODE	NUMBER	REV
MOS REGULATOR H777	D	CS	5411601-0-1	N
SCALE —	SHEET 3 OF 3	DIST.		

DEC FORM NO. 130

THIS DRAWING AND SPECIFICATIONS HEREIN ARE THE PROPERTY OF DIGITAL EQUIPMENT CORPORATION AND SHALL NOT BE REPRODUCED OR COPIED OR USED IN WHOLE OR IN PART AS THE BASIS FOR THE MANUFACTURE OR SALE OF ITEMS WITHOUT WRITTEN PERMISSION
COPYRIGHT © 1976 DIGITAL EQUIPMENT CORPORATION

NOTES:

USE TRANSIPAD DEC# 9007201 UNDER Q1 & Q8

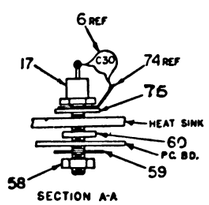

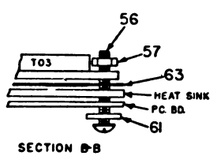

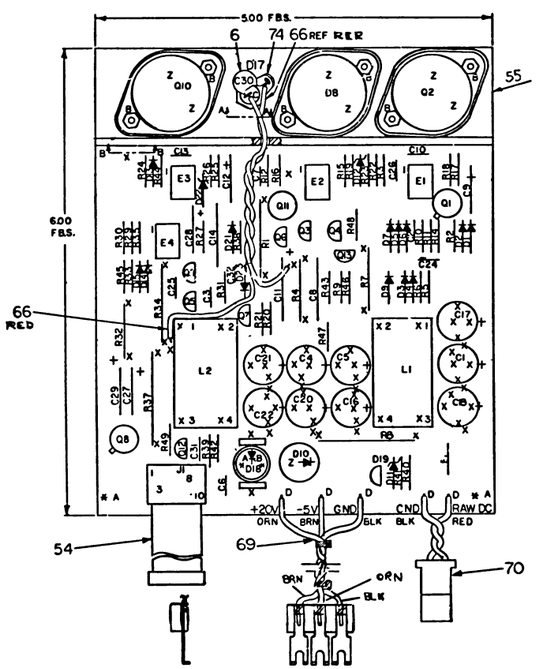

1		HEAT SINK	7416236-0-0	55	REF		X-Y COORDINATE HOLE LOCATION	K-CO-5411599-0-4	1
6		SCREW, #4-40 x 1/2 lg PH HD	9006013-1	56	REF		ASSY/DRILLING HOLE LAYOUT	D-AH-5411599-0-5	2
6		NUT, KEP #4-40	9008557	57	REF		MODULE ECO HISTORY	B-MH-5411599-0-8	3
1		NUT, HEX #10-32	9008564	58	1		ETCHED CIRCUIT BOARD	5011598	4
1		WASHER, FLAT	9006662	59	1	C7	CAPACITOR, 100PF, 100V, 5%,	1000016	5
1		BUSHING, NYLON	9008440	60	6	C2,C3,C6,C30,C24,C25	CAPACITOR, .01uf, 100V DISC	1001610-01	6
6		WASHER, FLAT	9008172	61	3	C9, C27,C28	CAPACITOR, 1uf, 35V, 10% TANT	1001776	7
A/R		COMPOUND, THERMAL	9008268	62	2	C10,C13	CAPACITOR, 33pf, 100V DM	1000009	8
3		INSULATOR, TO 3	1213071-02	63	1	C11	CAPACITOR, 15uf, 35V, 10% TANT	1009725	9
~~1~~		~~WASHER, THERMAFILM~~	~~9008424~~	~~64~~	2	C8,C14	CAPACITOR, .01uf, 100V, 10% MYLAR	1005784	10
2		TRANSIPAD	9007201	65	1	C31	CAPACITOR, 220pf, 100V, 5%	1000021	11
A/R		WIRE #18 AWG, TWISTED PAIR	9107430-02	66	2	C5,C16	CAPACITOR, 1200uf, 63V	1012607-01	12
1	C29	CAPACITOR 2.2UF 20V	1002627	67	7	C1,C17,C18,C4,C20,C21,C22	CAPACITOR, 180uf, 50V	1012607-02	13
1	R47	RESISTOR 200, 1/4W, 5%	1311522	68	1	D22	DIODE, IN4742	1109502	14
1		HARNESS (THREE WIRE)	C-IA 7012547-0-0	69	1	D10	DIODE, MR1033B	1103341	15
1		HARNESS (TWO WIRE)	C-IA 7012546-0-0	70	10	D1 THRU D7, D14,D15, D21	DIODE, D872	1105275	16
1	C12	CAPACITOR, 10uf, 20V, 10%, TANT	1004813	71	1	D17	DIODE, IN3880	1109440	17
1	D23	DIODE, IN753A	1102421	72	2	D12,D13	DIODE, IN751, 5.1V 2%	1110713	18
1	C26	CAPACITOR, .47uf, 25V, 20%, CER	1010279	73	1	D8	DIODE	1110715	19
1		SOL DEP, TERM, SCREW MTG.	9007815	74	1	D11	DIODE, IN978B	1110856	20
1		SIL PAD .80D .190I D.	1213071-05	75	1	D19	DIODE, 2N5982	1110968	21
1	C32	CAP. 1UF 50V CER.	1010274-02	76	1	D9,	DIODE, A1140	1112595-01	22
					1	F1	FUSE, 15A, PICO	1210929	23
					1	R46	RESISTOR, 18K, 1/4W, 5%	1302465	24
					6	R9,R39,R40,R41,R43,R49	RESISTOR, 100, 1/4W, 5%	1300229	25
					1	R7	RESISTOR, 100, 1W, 5%	1300232	26
					3	R11, ,R2,R33	RESISTOR, 390, 1/4W, 5%	1300309	27
					6	R6,R12,R23,R31,R17,R48	RESISTOR, 1K, 1/4W, 5%	1300365	28
					3	R10, ,R14, ,R30	RESISTOR, 2 7K, 1 4W, 5%	1300426	29
					4	R42,R44, R15,R27	RESISTOR, 4 7K, 1/4W, 5%	1300447	30
					1	R4	RESISTOR 1K, 1W, 5%	1300368	31
					3	R16, R29,R38,	RESISTOR, 10K, 1/4W, 5%	1300479	32
					2	R3,R35	RESISTOR, 10, 1/4W, 5%	1301317	33
					1	,R45	RESISTOR, 470 1/4W, 5%	1300316	34
					1	R5	RESISTOR, 27, 1/4W, 5%	1301522	35
					1	,R34	RESISTOR, 330, 2W, 10%	1301961	36
					1	R19	RESISTOR, 2K, 1/4W, 5%	1302368	37
					2	R18,R26	RESISTOR, 100K, 1/4W, 5%	1302466	38
					1	R22	RESISTOR, 2 74K, 1/4W, 1%	1304868	39
					2	R1,R32	RESISTOR, 1, 2W, 5% WW	1305428	40
					2	R24, R25	RESISTOR, 1 5K, 1/4W 5%	1300391	41
					1	R21	RESISTOR, 8 25K, 1/4W, 1%	1309420	42
					2	R8,R37	RESISTOR, 08, 5W, 3% WW	1311803	43
					1	R20	RESISTOR, 56, 1/4W, 5%	1302602	44
					2	Q1,Q8	TRANSISTOR, 2N4038	1509700	45
					7	Q3,Q5,Q6,Q7,Q9,Q12,Q13	TRANSISTOR, XA85	1510705	46
					1	Q4	TRANSISTOR, XA55	1510706	47
					1	Q10	TRANSISTOR, C32AX135	1510928	48
					2	Q2,Q10	TRANSISTOR, 2N5038	1510969	49
					1	Q11	TRANSISTOR, 2N5433	1511686	50
					2	L1,L2	INDUCTOR, 500uh	1612593	51
					2	E1,E3	I.C DEC 301A	1910262	52
					2	E2,E4	I C DEC 555	1911944	53
					1	J1	CABLE ASSY	7011414 -0E	54
					QTY	REF. DESIGNATION	DESCRIPTION	PART NO	ITEM NO

PARTS LIST

IC TYPE	GND	+5V

GND AND 5V ARE USUALLY PIN 7 AND 14 RESPECTIVELY EXCEPTIONS ARE STATED ABOVE

IC PIN LOCATIONS

REV.	CHANGE NO.	CHK	
J	5411599-00003		J. SCSIC 2-8-77
H	5411599-00002		B. COURTEMANCHE
F	5411599-00001		G. POTTER

REVISIONS

FIRST USED ON OPTION MODEL

DEC NO.	EIA NO.	DEC NO.	EIA NO

SEMICONDUCTOR CONVERSION CHART

ETCH BOARD REV. D

DRN. DATE
CHK'D DATE
ENG. DATE
PROJ. DATE
PROD. DATE
NEXT HIGHER ASSY E-UA-H777-0-0
SCALE
SHEET 1 OF 2

digital

TITLE +20V REGULATOR/H777

SIZE D CODE CS NUMBER 5411599 0 1 REV. J

DIST.

"THIS DRAWING AND SPECIFICATIONS, HEREIN, ARE THE PROPERTY OF DIGITAL EQUIPMENT CORPORATION AND SHALL NOT BE REPRODUCED OR COPIED OR USED IN WHOLE OR IN PART AS THE BASIS FOR THE MANUFACTURE OR SALE OF ITEMS WITHOUT WRITTEN PERMISSION
COPYRIGHT © 1976 DIGITAL EQUIPMENT CORPORATION"

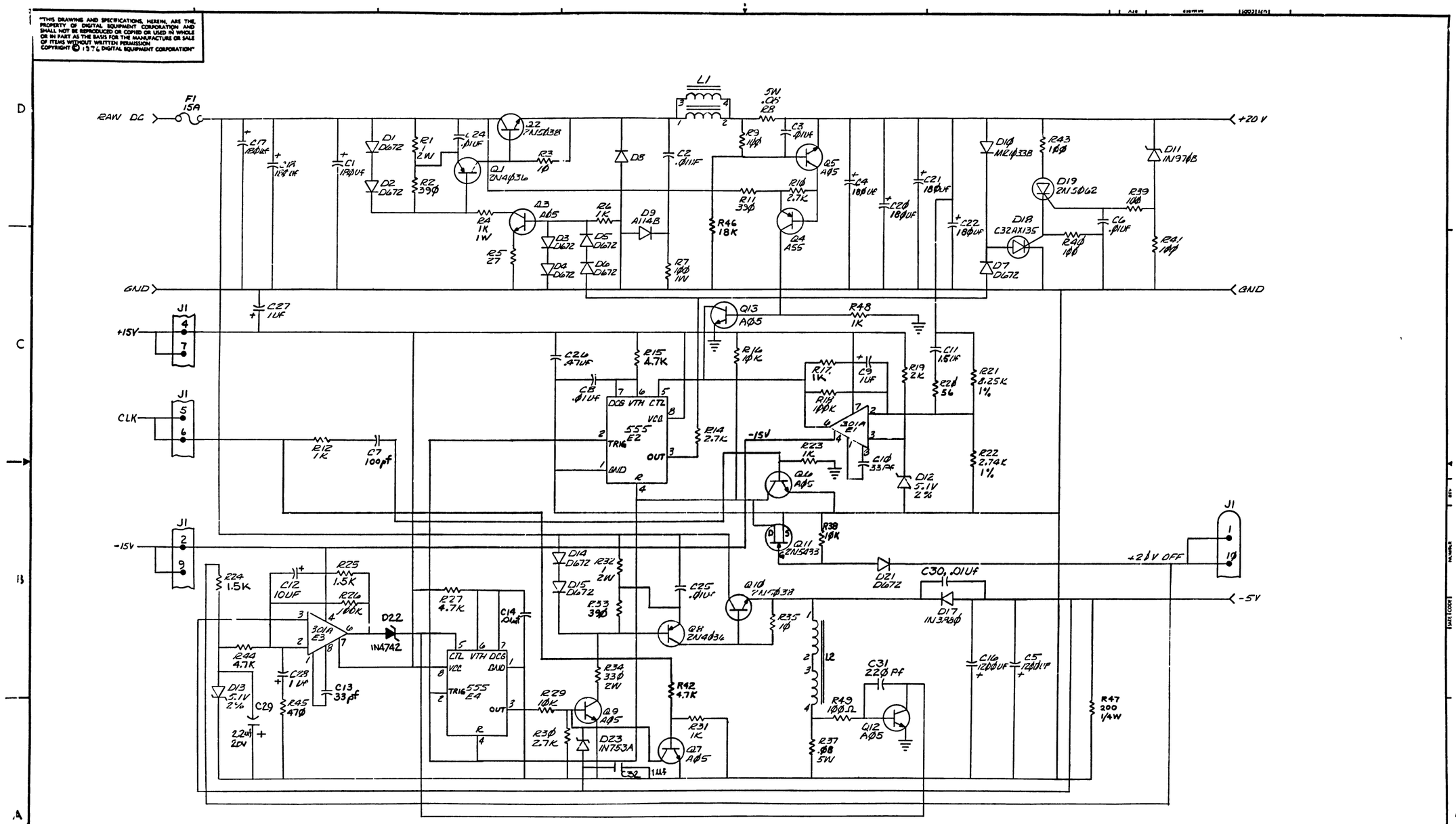

REVISIONS		
CHK	CHANGE NO	REV

TITLE	SIZE	CODE	NUMBER	REV.
+20V REGULATOR/H777	D	CS	5411599-0-1	J
SCALE	SHEET 2 OF 2	DIST.		

DEC FORM NO.

DIGITAL EQUIPMENT CORPORATION
MAYNARD, MASSACHUSETTS

PARTS LIST

MADE BY W. Rich DATE 19 JULY 76 | CHECKED D. HEALY DATE 29 JUL 76 | SECTION 1
ENG R. Barry DATE 26 AUG 76 | PROD RB King DATE 26 Aug 76 | ISSUED SECT. 1

ITEM NO	DWG NO./PART NO.	DESCRIPTION	H777-AA	H777-AB	H777-BA	H777-BB	H777-CA	H777-CB	H777-DA	H777-DB
23	C-IA-7413773-0-0	BRACKET, FAN	2	2	2	2	2	2	2	2
24	1210984-05	INS SHEET 9.0±.1 X 1.5 ±.1	A/R	A/R	A/R	A/R	A/R	A/R	A/R	A/R
25	B-DC-7414744-0-0	DECAL H777 P.S.	1	1	1	1	-	-	-	-
26	A-PS-3612680-0-0	DECAL, CHASSIS GROUND	2	2	2	2	2	2	2	2
27	C-IA-7011412-0F	CABLE, CHASSIS GROUND	1	1	1	1	1	1	1	1
28	C-IA-7011412-1H	CABLE, CONSOLE GROUND	—	—	—	—	1	1	1	1
29	D-CS-5411599-0-1	CORE REG. H777	1	1	-	-	1	1	-	-
30	9007015	GROMMET	-	-	-	-	1	1	1	1
31	D-IA-7417407-0-0	CHASSIS P.S.	-	-	-	-	1	1	1	1
32	D-AD-7012910-0-0	A/C INPUT ASSY (120V)	-	-	-	-	1	-	1	-
33	D-AD-7012910-1-0	A/C INPUT ASSY (230V)	-	-	-	-	-	1	-	1
34	E-IA-7417018-0-0	COVER, POWER SUPPLY	-	-	-	-	1	1	1	1
35	A-PS-1213773-0-0	AC RECEPTACLE	-	-	-	-	1	1	1	1
36	A-PS-1212877-0-0	FILTER	-	-	-	-	1	1	1	1
37	D-AD-7012909-0-0	+5V REGULATOR ASSY	-	-	-	-	1	1	1	1
38	9009771-1-0	CABLE CLAMP	-	-	-	-	2	2	2	2
39	9006024-01	SCREW, PAN #6 - 32 x .50	-	-	-	-	1	1	1	1
40	9008404-2	SCR PHL FLAT HD #6 - 32 x .31	4	4	4	4	11	11	11	11
41	9107253-02	TUBING, SHRINK (ORN)	-	-	-	-	A/R	A/R	A/R	A/R
42	C-IA-7417288-0-0	WIRE A.C. CONN. HARNESS	-	-	-	-	REF	REF	REF	REF
43	B-DC-7414744-1-0	DECAL H777 P.S.	-	-	-	-	1	1	1	1
44	9006037-1	SCR, PHIL PAN HD #8 - 32 x .38	-	-	-	-	1	1	1	1

TITLE POWER SUPPLY ASSY (H777) | ASSY NO. E-UA-H777-0-0 | SIZE A | CODE PL | NUMBER H777-0-0 | REV N | ECO NO
SHEET 2 OF 3 | DIST.

DEC FORM DEC 16-(325)-1031-N870
DRA 110

DIGITAL EQUIPMENT CORPORATION
MAYNARD, MASSACHUSETTS

PARTS LIST

MADE BY | CHECKED D. HEALY DATE 29 JUL 76 | SECTION 1
ENG R Barry 26 AUG 76 DATE | PROD RB King DATE 26 Aug 76 | ISSUED SECT. 1

ITEM NO	DWG NO./PART NO.	DESCRIPTION	H777-AA	H777-AB	H777-BA	H777-BB	H777-CA	H777-CB	H777-DA	H777-DB
45	9006634	WASHER INT. TOOTH LOCK #8	-	-	-	-	1	1	1	1
~~46~~	~~D-IA-7013218-1~~	~~AC POWER CORD ASSEMBLY 230V~~								
47	9006011-1	SCR PH HD PAN #4 - 40 x .38	-	-	-	-	2	2	2	2
48	9006632	WASHER INT. TOOTH LOCK #4	-	-	-	-	2	2	2	2
49	9008020-02	SCR, PHIL FLAT HD. #6-32 x .18	1	1	1	1	-	-	-	-
50	7011411-1L	CABLE, CONSOLE CONTROL	-	-	-	-	REF	REF	REF	REF
51	9006022-03	SCR. PHIL. TRUSS #6-32 x .38	-	-	-	-	4	4	2	2
52	C-IA-7013938-1	CABLE JUMPER	-	-	-	-	1	1	1	1
53	C-IA-7013938-0	CABLE JUMPER	-	-	-	-	1	1	1	1
54	C-IA-7013939-0	CABLE GROUNDING	-	-	-	-	1	1	1	1
55	C-IA-7420323-00	AC POWER CORD W/LABLE (120V)	-	-	-	-	1	-	1	-
56	C-IA-7420323-01	AC POWER CORD W/LABLE (240V)	-	-	-	-	-	1	-	1
57	9006656	WASHER, FLAT	4	4	2	2	3	3	1	1
58	9006025-01	SCR, PAN PHIL 6-32 x 5/8	3	3	3	3	3	3	3	3
59	9006560	NUT, KEP 6-32	3	3	3	3	3	3	3	3
60	7011412-3C	CABLE ASSY	1	1	1	1	-	-	-	-
61	9006561	NUT, HEX 8-32	1	1	1	1	-	-	-	-
62	7011414-1F	CABLE, CONSOLE CONTROL	REF	REF	REF	REF	-	-	-	-
63	9009255-00	LABEL	1	1	1	1	1	1	1	1
64	3614833-	LABEL, WARNING	-	-	-	-	1	1	1	1

TITLE POWER SUPPLY ASSY (H777) | ASSY NO. E-UA-H777-0-0 | SIZE A | CODE PL | NUMBER H777-0-0 | REV N | ECO NO
SHEET 3 OF 3 | DIST

DIGITAL EQUIPMENT CORPORATION
MAYNARD, MASSACHUSETTS

PARTS LIST

MADE BY W. Rich DATE 19 JULY 76 | CHECKED D. HEALY DATE 29 JUL 76 | SECTION 1
ENG R Barry DATE 26 AUG 76 | PROD RB King DATE 26 Aug 76 | ISSUED SECT. 1

ITEM NO	DWG NO./PART NO.	DESCRIPTION	H777-AA	H777-AB	H777-BA	H777-BB	H777-CA	H777-CB	H777-DA	H777-DB
1	D-IA-7011248-0-0	CHASSIS ASSY P.S.	1	1	1	1	-	-	-	-
2	9007031-05	TIE WRAP	A/R	A/R	A/R	A/R	A/R	A/R	A/R	A/R
3	D-AD-7011075-0-0	A/C INPUT ASSY (120V)	1	-	1	-	-	-	-	-
4	D-AD-7011075-1-0	A/C INPUT ASSY (230V)	-	1	-	1	-	-	-	-
5	9007035	GROMMET CAT.	A/R	A/R	A/R	A/R	A/R	A/R	A/R	A/R
6	9006563	NUT, KEPS #8 - 32	2	2	2	2	2	2	2	2
7	E-MD-7413825-0-0	COVER, POWER SUPPLY	1	1	1	1	-	-	-	-
8	D-AD-7011073-0-0	+5V REGULATOR ASSY	1	1	1	1	-	-	-	-
9	D-CS-5411601-0-1	MOS. REC. H777	1	1	1	1	1	1	1	1
10	9006021-01	SCR. PHL HD PAN #6 - 32 x .31	4	4	2	2	3	3	1	1
11	9008509	STRAIN RELIEF	1	1	1	1	-	-	-	-
12	D-IA-7012320-0	POWER CORD (115V)	1	-	1	-	-	-	-	-
13	D-IA-7012320-1	POWER CORD (230V)	-	1	-	1	-	-	-	-
14	9006022-1	SCR. PHIL HD PAN #6-32 x .38	6	6	4	4	7	7	2	2
15	9006633	WASHER, INT. TOOTH #6	10	10	6	6	3	3	1	1
16	9009771-02	CLAMP	2	2	2	2	-	-	-	-
17	1209403-01	FAN, BOXER 115V, 50/60 HZ	1	1	1	1	1	1	1	1
18	9006020-2	SCR, PHIL FLAT HD #6 - 32 x .25	7	7	7	7	4	4	4	4
19	9008185	NUT, KEPS #6 - 32	—	—	—	—	2	2	2	2
~~20~~	~~9006023-1~~	~~SCR., PHIL HD PAN #6 - 32 x .44~~	~~4~~	~~4~~	~~4~~	~~4~~	~~4~~	~~4~~	~~4~~	~~4~~
21	9006074-3	SCR., PHIL TRUSS #10 - 32 x .62	4	4	4	4	4	4	4	4
22	9007651	WASHER, EXT. TOOTH #10	4	4	4	4	4	4	4	4

TITLE POWER SUPPLY ASSY (H777) | ASSY NO. E-UA-H777-0-0 | SIZE A | CODE PL | NUMBER H777-0-0 | REV N | ECO NO H777-ML-006
SHEET 1 OF 3 | DIST

"THIS DRAWING AND SPECIFICATIONS, HEREIN, ARE THE PROPERTY OF DIGITAL EQUIPMENT CORPORATION AND SHALL NOT BE REPRODUCED OR COPIED OR USED IN WHOLE OR IN PART AS THE BASIS FOR THE MANUFACTURE OR SALE OF ITEMS WITHOUT WRITTEN PERMISSION. COPYRIGHT © 1971, DIGITAL EQUIPMENT CORPORATION"

NOTES:

1. TO SELECT STAND BY/MODE, ON MODE OR OFF MODE SEE D-CS-5411501-0-1.

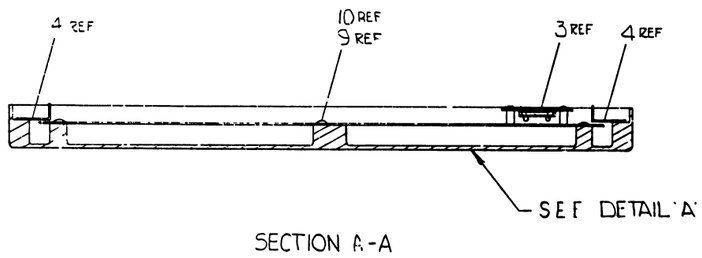

SECTION A-A

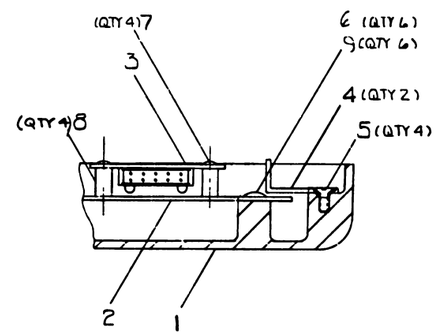

DETAIL 'A'
SCALE 1/1

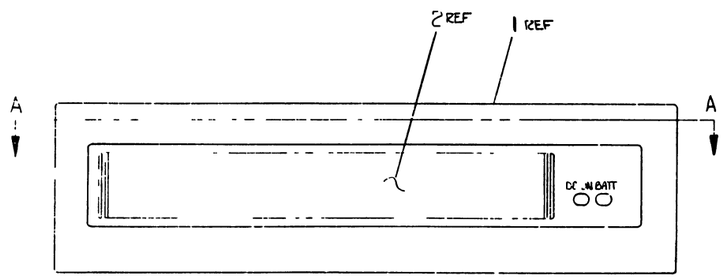

6	SCREW PAN HD PHIL #8 32-.31 LG	9006036-1	9
4	SPACER, .25 D, X 6-32 X .44 LG	9008835	8
4	SCREW, PAN HD. PHIL 6 32 X .19 LG	9008020-1	7
6	WASHER, INT. TOOTH #8	9006634	6
4	SCR FLAT HD PHIL #8-32 X .25	9006035-02	5
2	BRACKET SUPPORT FILTER	C MD-7414962-1-0	4
1	CONT. EXP. BOX (BA11-L)	D-UA-5411501-0-0	3
1	PANEL EXPANDER BOX	B-IA-7017321-0-0	2
1	BEZEL	E-MD-7416747-0-0	1
	DESCRIPTION	DWG/PART NO	ITEM NO

UNLESS OTHERWISE SPECIFIED DIMENSIONS ARE IN INCHES

ANGLES ±0° 30'	CLASS OF ACCURACY (CHECK ONE)	NOMINAL DIMENSION RANGE INCHES: OVER 0 TO 0.2	OVER 0.2 TO 1.2	OVER 1.2 TO 4.0	OVER 4.0 TO 12.0	OVER 12.0 TO 40.0	OVER 40.0 TO 80.0
SURFACE QUALITY IN MICROINCHES	MEDIUM ☐	±.004	±.008	±.012	±.016	±.024	±.04
	PREFERRED ☐	±.012	±.016	±.026	±.04	±.063	±0.1

QUANTITY & VARIATION

THIRD ANGLE PROJECTION

REMOVE BURRS AND BREAK SHARP CORNERS

DO NOT SCALE DWG

MATERIAL: SEE PARTS LIST

FINISH

DRN 22 FEB 76
CHK'D 26 MAR 76
ENG 28 JUN 76
PROJ. ENG 26 MAY 76
PROD 26 APR 76

NEXT HIGHER ASSY. E-UA-BA11-L-0

SCALE 1/2

SHEET 1 OF 1

FIRST USED ON 1104

digital

TITLE: CONSOLE ASSY EXPANDER BOX

SIZE	CODE	NUMBER	REV.
D	AD	7012540-0-0	A

DIST.

REVISIONS

CHK	CHANGE NO.	REV
	7012540-00001	A

P LORUSSO

D AD 7012540-0-0 A

"THIS DRAWING AND SPECIFICATIONS, HEREIN, ARE THE PROPERTY OF "DIGITAL EQUIPMENT CORPORATION", AND SHALL NOT BE REPRODUCED OR COPIED OR USED IN WHOLE OR IN PART AS A BASIS FOR THE MANUFACTURE OR SALE OF ITEMS WITHOUT WRITTEN PERMISSION. COPYRIGHT © 1970, DIGITAL EQUIPMENT CORPORATION"

NOTES:

1. SHOWN IN MTG BRACKET POSITION ALSO SHOWN IN SHIPPING POSITION.
2. BECAUSE OF U.L. REQUIREMENTS THE REAR OF THE POWER SUPPLY MUST BE COVERED, THE GUARD SHOWN IS TO BE INSTALLED ON UNITS THAT DON'T HAVE THE NEW P/S SUPPLY WITH CLOSED ENDS. THERE SHOULD BE APPROX. 500 UNITS THAT WILL REQUIRE THIS RETROFIT.

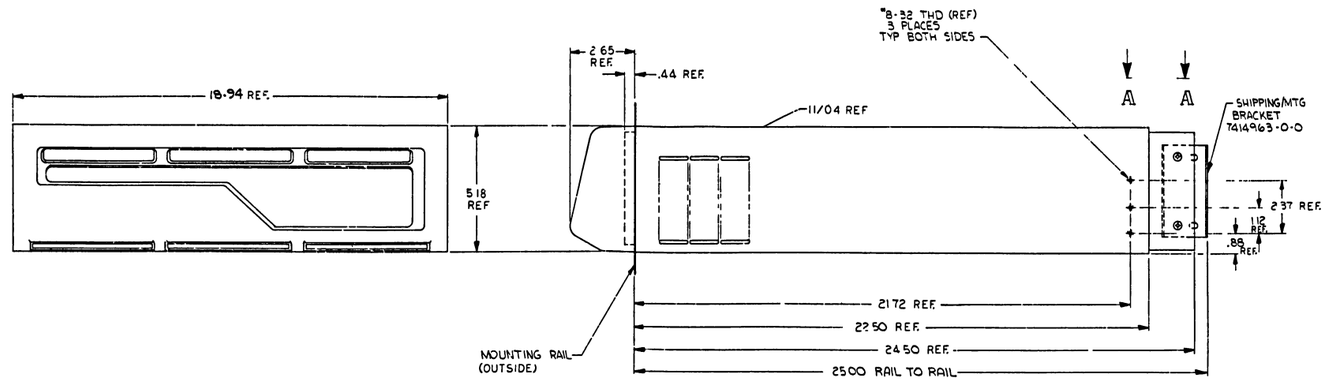

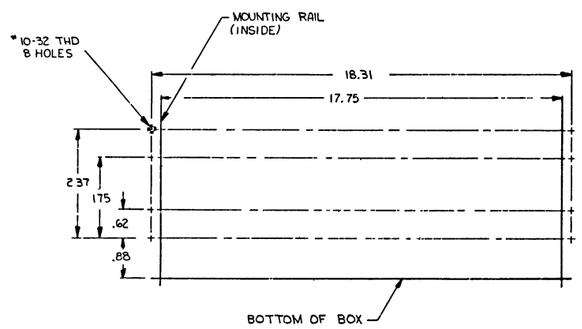

HOLE PATTERN REQ'D

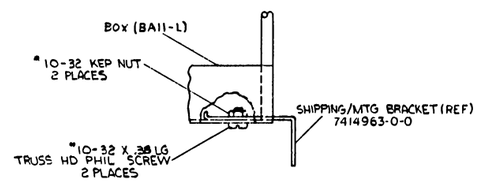

VIEW A-A
NO SCALE
SEE NOTE 1

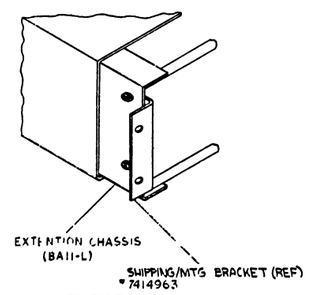

MTG POSITION

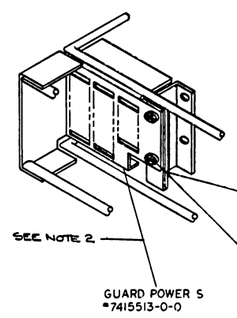

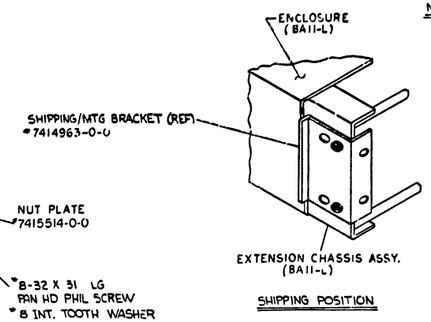

SHIPPING POSITION

QUANTITY & VARIATION	DESCRIPTION	DWG./PART NO	ITEM NO
	UNLESS OTHERWISE SPECIFIED DIMENSIONS ARE IN INCHES		
THIRD ANGLE PROJECTION	DRN	27 FEB 74	FIRST USED ON 11/04
REMOVE BURRS AND BREAK SHARP CORNERS	CHK	26 FEB 74	TITLE INSTALLATION AID
DO NOT SCALE DWG	ENG		
	PROJ ENG		
	PROD		
	NEXT HIGHER ASSY		
MATERIAL	BA11-L	SIZE E	CODE AD
FINISH	SCALE NO SCALE	NUMBER 7012588 0-0	REV
	SHEET 1 OF 1	DIST	

digital

REVISIONS: REV | CHANGE NO | CHK

DEC FORM NO

BLANK

digital EQUIPMENT CORPORATION MAYNARD MASSACHUSETTS

DRAWING DIRECTORY

"THIS DRAWING AND SPECIFICATIONS, HEREIN, ARE THE PROPERTY OF DIGITAL EQUIPMENT CORPORATION AND SHALL NOT BE REPRODUCED OR COPIED OR USED IN WHOLE OR IN PART AS THE BASIS FOR THE MANUFACTURE OR SALE OF ITEMS WITHOUT WRITTEN PERMISSION. COPYRIGHT © 1975 , DIGITAL EQUIPMENT CORPORATION"

~~CUSTOMER PRINT SET INDEX~~

SEQUENCE

SEQUENCE

~~THIS IS PRINT SET~~

NOTE:
FOR FIELD MAINTENANCE
PRINT SET REFER TO
B-TC-BA11-L-1

UNIT VARIATIONS

VAR	TITLE	PRINT SET
BA11-LA	5.25 BOX, H777-AA P.S. 115V	
BA11-LB	5.25 BOX, H777-AB P.S. 230V	
BA11-LC	5.25 BOX, H777-BA P. S. 115V	
BA11-LD	5.25 BOX, H777-BB P. S. 230V	
BA11-LE	5.25 EXPANDER BOX, H777-CA P. S.	
	115V	
BA11-LF	5.25 EXPANDER BOX, H777-CB P. S	
	230V	
BA11-LH	5.25 EXPANDER BOX, H777-DA P. S.	
	115V	
BA11-LJ	5.25 EXPANDER BOX, H777-DB P. S	
	230V	
BA11-LK	5.25 BOX & H777CA 115V CORE & MOS	
BA11-LL	5 25 BOX & H777CB 230V CORE & MOS	
BA11-LM	5.25 BOX & H777DA 115V MOS ONLY	
BA11-LN	5 25 BOX & H777DB 230V MOS ONLY	

REVISIONS

DATE	CHG. NO.	REV
4-76	BA11-L-4	A
10-76	BA11L-6	B
1-77	BA11L-7	C
3-77	BA11L-8	D
4-77	BA11L-9	E
5-77	BA11-L-10	F
7-77	BA11L-11	H

USED ON OPTION/MODEL	
11/Ø4	
11/34	

SHEET 1 OF 4

DRN. G. MARINI	DATE 9/3/75	TITLE DRAWING DIRECTORY BA11-L	
CHK'D. D. HEALY	DATE 9/30/75		
PROJ ENG. R Barry	DATE 10-22-75		
PROD. RK Peterson	DATE 10/22/75	SIZE B / CODE DD / NUMBER BA11-L	REV H
~~FIELD SERV.~~	~~DATE~~	DIST	

EN-01062-1A-16-R972-(325)

DRB 106

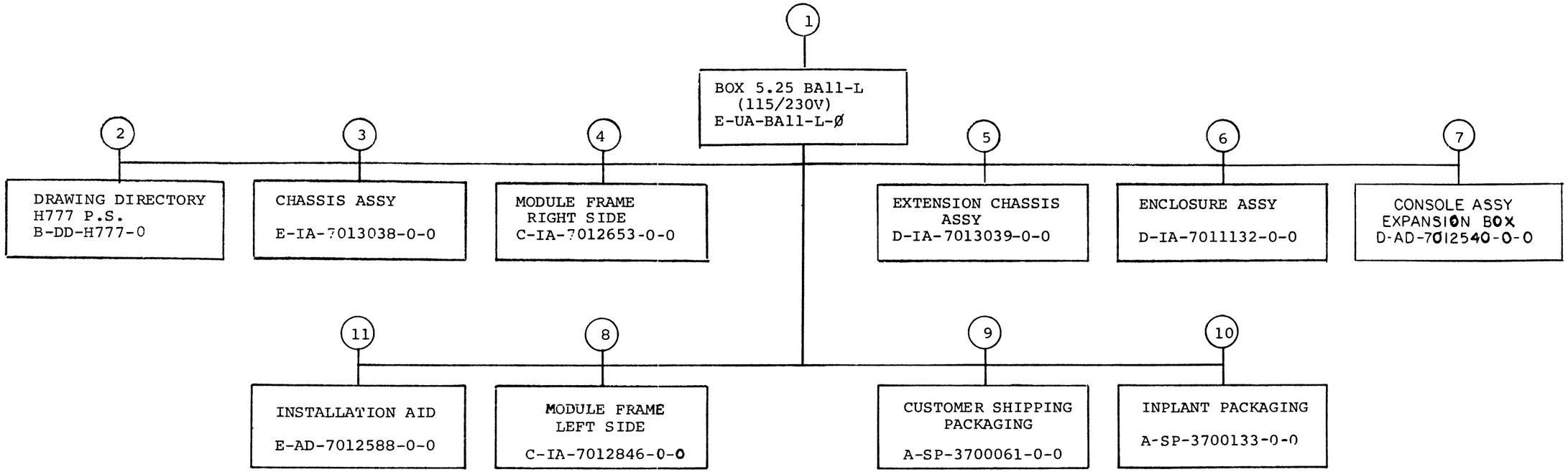

TITLE		SIZE	CODE	NUMBER	REV
DRAWING DIRECTORY BA11-L	SHEET 2 OF 4	B	DD	BA11-L	H

DRB 107
DEC 16-(325) 1962-3 N871

ELECTRICAL (SECTION 1)

CUSTOMER PRINT SET	REG. SET	FIND NO.	DRAWING NO.	REV	NO OF SHT	DESCRIPTION	OPTION NO	FILE DATE
		1	E-UA-BA11-L-Ø		1	BOX 5.25 BA11-L 115/230V		
			A-PL-BA11-L-Ø		3	BOX 5.25 BA11-L 115/23ØV (PL)		
			D-UA-BC11A-10-0		1	UNIBUS CABLE 1Ø FT		
			B-CS-M919-0-1		1	BUS CONNECTOR M 919		
			B-CS-M929-0-1		1	BUS CONNECTOR M929		
		2	B-DD-H777-B		4	DRAWING DIRECTORY H777		
		7	D-AD-7012540-0-0		1	CONSOLE ASSY, EXPANSION BOX		
			D CS-5411501-0 0		1	BA11-L EXP. BOX CONTROL		

MECHANICAL (SECTION 2)

CUSTOMER PRINT SET	REG. SET	FIND NO.	DRAWING NO.	REV	NO OF SHT	DESCRIPTION	OPTION NO	FILE DATE
		1	E-UA-BA11-L-Ø		1	BOX 5.25 BA11-L (115/230V)		
			B-MD-7413846-0-0		1	BAR, CABLE STRAIN RELIEF		
			C-IA-7011412-0-0		1	CABLE, CHASSIS GND		
			C-MD-7414963-0-0		1	BRKT., SHIPPING AND CAB MOUNT		
			A-PL-BA11-L-Ø		3	BOX 5.25 BA11-L 115/23ØV (PL)		
			A-DC-5309413-0-0		1	DECAL NFPA		
			A-DC-5309414-0-0		1	DECAL UL		
		2	B-DD-H777-B		4	DRAWING DIRECTORY H777 P.S.		
		3	E-IA-7013038-0-0		1	CHASSIS ASSY		
			C-MD-7414236-0-0		1	FRAME, CHASSIS		
			C-MD-7413855-0-0		1	BRACKET MTG (LH)		
			C-MD-7413852-0-0		1	BRACKET MTG (RH)		
			C-MD-7413853-0-0		1	BRACKET, FRAME		
			C-IA-7414442-0-0		1	BRACKET LOGIC SUPPORT (BOT)		
			C-IA-7414441-0-0		1	BRACKET LOGIC SUPPORT (BOT)		
			C-MD-7413857-0-0		1	BRACKET MAIN SUPPORT		
			C-MD-7413858-0-0		1	BRACKET, SUPPORT		
			B-MD-7414237-0-0		1	ROD CONNECTING CHASSIS		
			B-MD-7413856-0-0		1	BRACKET, FAN MOUNTING		
			B-MD-7414235-0-0		1	SUPPORT DIAGONAL ROD		
			C-MD-7413854-0-0		1	BRACKET POWER SUPPLY SUPPORT		
			B-IA-7414443-0-0		1	CLAMP PLATE CABLE		
			C-MD-7417221-0-0		1	ROD MODULE RETAINER		
			C-MD-7419019-0-0		1	BRACKET, MODULE FRAME STIF.		
		4	C-IA-7012653-0-0		1	MODULE FRAME RIGHT HAND		
			C-MD-7414084-0-0		1	BRACKET EJECTOR (MODULE FRAME)		
			C-MD-7414082-0-0		1	BRACKET BACKPLANE (MODULE FRAME)		
			C-MD-7416516-0-0			ROD, MODULE FRAME		
			C-MD-7416517-0-0			BRACKET, CARD GUIDE		

CUSTOMER PRINT SET CODES
X = PRINT OF DOCUMENT INCLUDED IN PRINT SET
C = INCLUDES ALL PRINTS INDICATED ON DOCUMENT
S = CONFIDENTIAL AUTHORIZED SIGNATURE REQUIRED

TITLE		SIZE	CODE	NUMBER	REV
DRAWING DIRECTORY BA11-L	SHEET 3 OF 4	B	DD	BA11-L	H

DRB 108

MECHANICAL (SECTION 2)

CUSTOMER PRINT SET	MFG. SET	FIND NO.	DRAWING NO.	REV	NO OF SHT	DESCRIPTION	OPTION NO. FILE DATE
		5	D-IA-7013039-0-0		1	EXTENSION CHASSIS ASSY	
			B-MD-7414086-0-0		1	ROD EXTENSION FRAME	
			C-MD-7417220-0-0			PLATE END RIGHT HAND	
			C-MD-7417239-0-0			PLATE END LEFT HAND	
		6	D-IA-7011132-0-0		1	ENCLOSURE ASSY	
			D-IA-7013868-0-0		1	ENCLOSURE BOTTOM	
			D-MD-7413869-0-0		1	ENCLOSURE TOP	
		7	D-AD-7412540-0-0		1	CONSOLE ASSY, EXPANSION BOX	
		8	C-IA-7012846-0-0			MODULE FRAME LEFT SIDE	
			C-MD-7414084-0-0			BRKT. EJECTOR L.H.	
			C-MD-7416517-0-0			BRKT. CARD GUIDE	
			C-MD-7414082-0-0			BRKT. BACKPLANE L.H.	
			C-MD-7416516-0-0			ROD	
		9	A-SP-3700061-0-0			PACKAGING INSTRUCTIONS CUST.	
			A-PS-9905647-0-0			FULL-TELESCOPE CAP	
			A-PS-9905648-0-0			FOAM PAD	
			A-PS-9905646-0-0			FOAM WITH CORRUGATED SIDEWALL ASSEMBLY	
			A-PS-9905734-0-0			STRAPPING (STEEL OR PLASTIC)	

MECHANICAL (SECTION 2)

CUSTOMER PRINT SET	MFG. SET	FIND NO.	DRAWING NO.	REV	NO OF SHT	DESCRIPTION	OPTION NO. FILE DATE
		10	A-SP-3700133-0-0			PACKAGING IN PLANT	
			A-PS-9905271-0-0			LAMINATED BUILDUPS SADDLE	
			A-PS-9905184-0-0			BEZEL PROTECTOR	
			A-PS-9905418-0-0			REGULAR SLOTTED CARTON	
			A-PS-9905129-7			POLY BAG	
			A-PS-9905729-0-0			3 IN. WIDE GLASFLEX TAPE	
		11	E-AD-7012588-0-0			INSTALLATION AID	

CUSTOMER PRINT SET CODES
X = PRINT OF DOCUMENT INCLUDED IN PRINT SET
C = INCLUDES ALL PRINTS INDICATED ON DOCUMENT
S = CONFIDENTIAL AUTHORIZED SIGNATURE REQUIRED

TITLE		SIZE	CODE	NUMBER	REV
DRAWING DIRECTORY BA11-L	SHEET 4 OF 4	B	DD	BA11-L	H

DRB 108

DIGITAL EQUIPMENT CORPORATION
MAYNARD, MASSACHUSETTS

PARTS LIST

MADE BY	CHECKED	SECTION
DATE 7/7/77	DATE	1
ENG DATE R Barry SEPT 6	PROD DATE R Barry SEPT 6	ISSUED SECT. 1

ITEM NO.	DWG NO./PART NO.	DESCRIPTION	BAIIL-LE	BAIIL-LF	BAIIL-LH	BAIIL-LJ		ALL OTHER	VARIATIONS GET ONLY ITEMS 1+2					
1	EK-BAIIL-MM	MAINTANCE MANUL	1	1	1	1		1						
2	MP00018	PRINT SET BAII-L	1	1	1	1		1						
3	D-UA-BCIIA-10-0	CABLE UNIBUS 10FT	1	1	1	1								

TITLE	ASSY NO.	SIZE	CODE	NUMBER	REV.	ECO NO.
SHIPPING LIST	E-UA-BAII-L-0	A	PL	BAII-L-4		
	SHEET 1 OF 1	DIST.				

DEC FORM DEC 16-(325)-1031-N870
DRA 110

BLANK

"THE MATERIAL HEREIN IS FOR INFORMATION PURPOSES ONLY AND IS SUBJECT TO CHANGE WITHOUT NOTICE. DIGITAL EQUIPMENT CORPORATION ASSUMES NO RESPONSIBILITY FOR ANY ERRORS WHICH MAY APPEAR HEREIN."

FIELD MAINTENANCE PRINT SET

"THIS DRAWING AND SPECIFICATIONS, HEREIN, ARE THE PROPERTY OF DIGITAL EQUIPMENT CORPORATION AND SHALL NOT BE REPRODUCED OR COPIED OR USED IN WHOLE OR IN PART AS THE BASIS FOR THE MANUFACTURE OR SALE OF ITEMS WITHOUT WRITTEN PERMISSION. COPYRIGHT © , DIGITAL EQUIPMENT CORPORATION."

TABLE OF CONTENTS

FIELD MAINT. PRINT SET H777-0	B-TC-H777-0-2
POWER SUPPLY H777-0 SH2	E-UA-H777-0-0
POWER SUPPLY H777-0 (PL)	A-PL-H777-0-0
+5V REGULATOR ASSY.	D-AD-7012909-0-0
+5V REG. ASSY. (PL)	A-PL-7012909
BOARD, POWER DISTRIBUTION H777	D-CS-5411586-0-1
H777 +5V REGULATOR	D-CS-5412667-0-1
AC INPUT ASSY	D-AD-7012910-0-0
AC INPUT ASSY (PL)	A-PL-7012910-0-0
MOS REGULATOR H777	D-CS-5411601-0-1
CORE REGULATOR H777	D-CS-5411599-0-1

UNIT VARIATIONS COVERED BY THIS PRINT SET
H777-CA (CORE/MOS)
H777-CB (CORE/MOS)
H777-DA (MOS ONLY)
H777-DB (MOS ONLY)

H777-0 VOL.2

Field Maintenance Print Set

Digital Equipment Corporation

PRINT SET ORDER NO.
MP00309

REVISIONS			
REV.	–		E
CHG. NO.	H777-2	ORIGINATED	H777-5
DATE	JAN-77		3-78

USED ON OPTION/MODEL	
BA11-LA	BA11-LK
BA11-LB	BA11-LL
BA11-LC	BA11-LM
BA11-LD	BA11-LN
BA11-LE	
BA11-LF	
BA11-LH	
BA11-LJ	
SHEET I OF 1	

DRN.		DATE 18 Jan 77
CHK'D	KIT	DATE 19 JAN 77
PROJ. ENG.		DATE 25 JAN 77
FIELD SERV.		DATE 27-Jan 77

digital

TITLE: FIELD MAINTENANCE PRINT SET H777-0

SIZE	CODE	NUMBER	REV.
B	TC	H777-0-2	E

DIST.

DPE 1'4

BLANK

WIRE TABLE									
ITEM NO	DESCRIPTION AWG	COLOR	FROM CONNECTION	WITH	TO ITEM	CONNECTION	WITH	REMARKS
53	14	BLU	ITEM 35	SLDR	26	EMI LINE-1	--	AC LINE CORD
52	14	BRN	ITEM 35	SLDR	34	EMI LINE-2	—	AC LINE CORD
54	14	GRN/YEL	ITEM 35	SLDR	31	AC GND CHASSIS	—	AC LINE CORD
4	14	BLU	T1-5	—	8	J1-7 (BD2)	—	SEC VOLTAGE
OR 3	TWPL	BLU/BLK	T1-6	—	8	J1-6 (BD2)	—	
3	TW	BLU	T1-7	—	8	J1-8 (BD2)	—	
3 OR 4	18	GRY	—	—	8	J1-4 (BD1)	—	TO RELAY COIL
4	TWP	BLK	—	—	8	J1-5 (BD1)	—	
3 OR 4	18	WHT	—	—	4	FAN-1	—	POWER SUPPLY FAN POWER
	TWP	BLK	—	—	4	FAN-2	—	
28	14	GRN/YEL	GND CHASSIS #2	6	—	—	—	CONSOLE GND
27	14	GRN/YEL	GND CHASSIS #1	6	—	—	—	CHASSIS GND
	14	BLK	ITEM #29	—	8	J1-3 (BD2)	—	FROM CORE REG. (H777-CA, H777-CB ONLY)
	14	ORN	ITEM #29	—	8	J1-2 (BD2)	—	FROM CORE REG.
	14	BRN	ITEM #29	—	8	J1-1 (BD2)	—	FROM CORE REG.
42	14 TWP	BRN BLU	EMI-2 LOAD EMI-1 LOAD	41 41		CB(+2) LINE CB(+1) LINE	41 41	

LEGEND	
PART NO	VARIATION
H777-DA	P.S. MOS ONLY 115V
H777-DB	P.S. MOS ONLY 230V
H777-CA	P.S. CORE/MOS 115V
H777-CB	P.S. CORE/MOS 230V

NOTES:

1. APPLY SELF STICK M3 SHEET (ITEM #34) TO UNDER SIDE OF POWER SUPPLY COVER IN AREA OF HEAT SINKS (CORE & MOS REGS).
2. APPLY SELF STICK ITEM 26 BESIDE THIS GND STUD.
3. ITEM 28 IS A GND CABLE TO GND THE FRONT PANEL CASTINGS FOR MOS AND CORE REGULATORS.
4. CABLE PART OF ITEM #9.
5. CABLE & WIRES ARE PART OF ITEM #29.
6. ITEM #6 (METRIC NUT M4) CAN BE USED AS A REPLACEMENT IN FIELD IF NECESSARY.
7. INSTALL ITEM 41 OVER SOLDER ENDS PRIOR TO SOLDERING
8. POSITION ITEM #64 PARALLEL WITH, AND THE TOP EDGE ON THE SAME PLANE AS, THE TOP EDGE OF ITEM #43
9. ADD SHRINK TUBING OVER EXPOSED PART OF FASTON CONNECTOR.

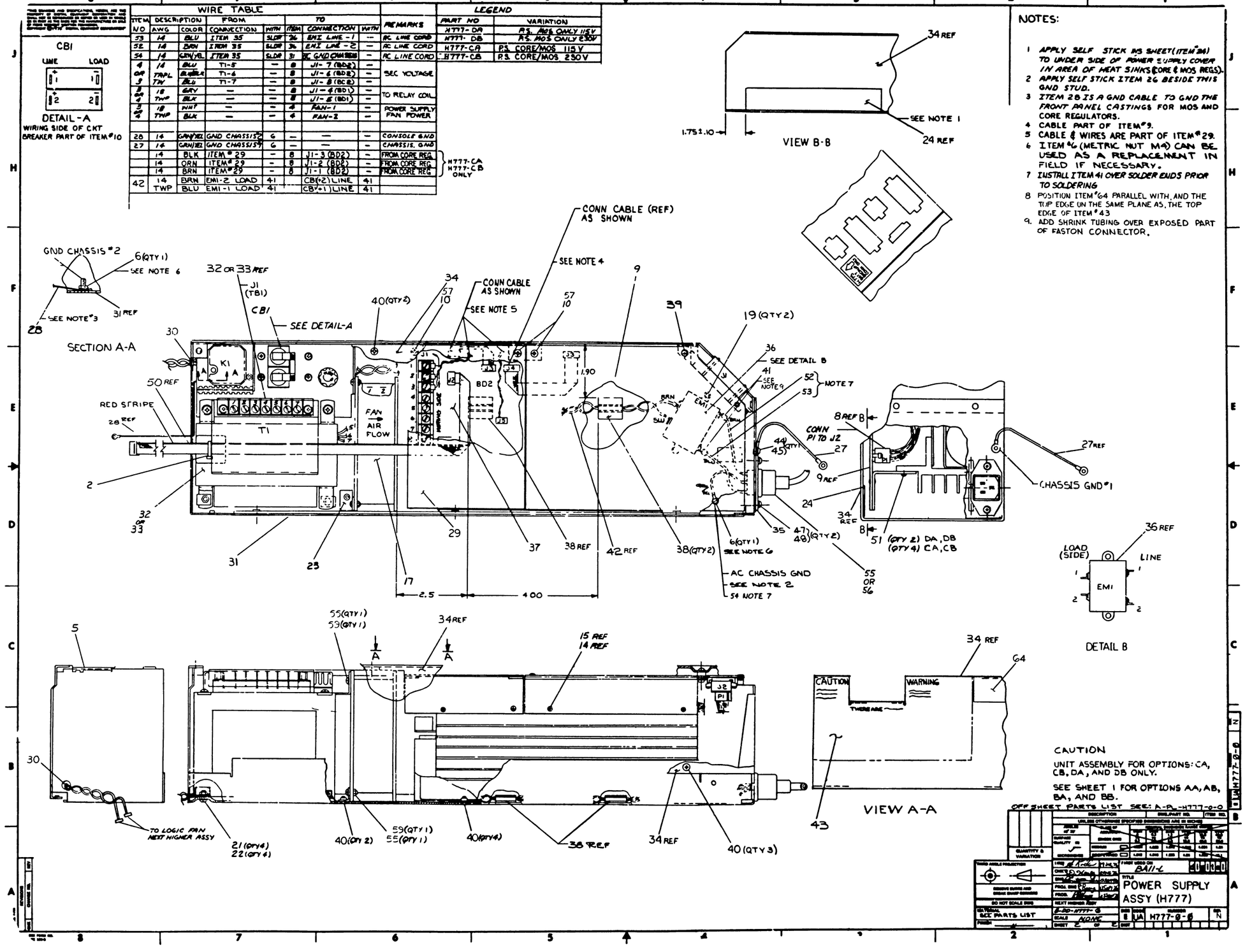

DIGITAL EQUIPMENT CORPORATION
MAYNARD, MASSACHUSETTS

PARTS LIST

MADE BY A. Rich DATE 19 Nov 75
CHECKED D. HEALY DATE 29 JUL 76
SECTION 1
ENG R. Barry DATE 26 Aug 76
PROD R B King DATE 26 Aug 76
ISSUED SECT. 1

ITEM NO	DWG NO./PART NO.	DESCRIPTION	H777-AA	H777-AB	H777-BA	H777-BB	H777-CA	H777-CB	H777-DA	H777-DB
23	C-IA-7413773-0-0	BRACKET, FAN	2	2	2	2	2	2	2	2
24	1210984-05	INS SHEET 9.0±.1 X 1.5 ±.1	A/R	A/R	A/R	A/R	A/R	A/R	A/R	A/R
25	B-DC-7414744-0-0	DECAL H777 P.S.	1	1	1	1	-	-	-	-
26	A-PS-3612680-0-0	DECAL, CHASSIS GROUND	2	2	2	2	2	2	2	2
27	C-IA-7011412-0F	CABLE, CHASSIS GROUND	1	1	1	1	1	1	1	1
28	C-IA-7011412-1H	CABLE, CONSOLE GROUND	—	—	—	—	1	1	1	1
29	D-CS-5411599-0-1	CORE REG. H777	1	1	-	-	1	1	-	-
30	9007015	GROMMET	-	-	-	-	1	1	1	1
31	D-IA-7417407-0-0	CHASSIS P.S.	-	-	-	-	1	1	1	1
32	D-AD-7012910-0-0	A/C INPUT ASSY (120V)	-	-	-	-	1	-	1	-
33	D-AD-7012910-1-0	A/C INPUT ASSY (230V)	-	-	-	-	-	1	-	1
34	E-IA-7417018-0-0	COVER, POWER SUPPLY	-	-	-	-	1	1	1	1
35	A-PS-1213773-0-0	AC RECEPTACLE	-	-	-	-	1	1	1	1
36	A-PS-1212877-0-0	FILTER	-	-	-	-	1	1	1	1
37	D-AD-7012909-0-0	+5V REGULATOR ASSY	-	-	-	-	1	1	1	1
38	9009771-1-0	CABLE CLAMP	-	-	-	-	2	2	2	2
39	9006024-01	SCREW, PAN #6 - 32 x .50	-	-	-	-	1	1	1	1
40	9008404-2	SCR PHL FLAT HD #6 - 32 x .31	4	4	4	4	11	11	11	11
41	9107253-02	TUBING, SHRINK (ORN)	-	-	-	-	A/R	A/R	A/R	A/R
42	C-IA-7417288-0-0	WIRE A.C. CONN. HARNESS	-	-	-	-	REF	REF	REF	REF
43	B-DC-7414744-1-0	DECAL H777 P.S.	-	-	-	-	1	1	1	1
44	9006037-1	SCR, PHIL PAN HD #8 - 32 x .38	-	-	-	-	1	1	1	1

TITLE POWER SUPPLY ASSY (H777)
ASSY NO. E-UA-H777-0-0
SHEET 2 OF 3
SIZE A CODE PL NUMBER H777-0-0 REV N ECO NO.
DIST.

DEC FORM DEC 16-(325)-1031-N870
DRA 110

DIGITAL EQUIPMENT CORPORATION
MAYNARD, MASSACHUSETTS

PARTS LIST

MADE BY
DATE
CHECKED D. HEALY DATE 29 JUL 76
SECTION 1
ENG R Barry 26 Aug 76
DATE
PROD R B King DATE 26 Aug 76
ISSUED SECT. 1

ITEM NO	DWG NO./PART NO.	DESCRIPTION	H777-AA	H777-AB	H777-BA	H777-BB	H777-CA	H777-CB	H777-DA	H777-DB
45	9006634	WASHER INT. TOOTH LOCK #8	-	-	-	-	1	1	1	1
~~46~~	~~D-IA-7013938-1~~	~~AC POWER CORD REPLABLE 230V~~	~~-~~	~~-~~	~~-~~	~~-~~	~~1~~	~~1~~	~~1~~	~~1~~
47	9006011-1	SCR PH HD PAN #4 - 40 x .38	-	-	-	-	2	2	2	2
48	9006632	WASHER INT. TOOTH LOCK #4	-	-	-	-	2	2	2	2
49	9008020-02	SCR, PHIL FLAT HD. #6-32 x .18	1	1	1	1	-	-	-	-
50	7011411-1L	CABLE, CONSOLE CONTROL	-	-	-	-	REF	REF	REF	REF
51	9006022-03	SCR. PHIL. TRUSS #6-32 x .38	-	-	-	-	4	4	2	2
52	C-IA-7013938-1	CABLE JUMPER	-	-	-	-	1	1	1	1
53	C-IA-7013938-0	CABLE JUMPER	-	-	-	-	1	1	1	1
54	C-IA-7013939-0	CABLE GROUNDING	-	-	-	-	1	1	1	1
55	C-IA-7420323-00	AC POWER CORD W/LABLE (120V)	-	-	-	-	1	-	1	-
56	C-IA-7420323-01	AC POWER CORD W/LABLE (240V)	-	-	-	-	-	1	-	1
57	9006656	WASHER, FLAT	4	4	2	2	3	3	1	1
58	9006025-01	SCR, PAN PHIL #6-32 x 5/8	3	3	3	3	3	3	3	3
59	9006560	NUT, KEP #6-32	3	3	3	3	3	3	3	3
60	7011412-3C	CABLE ASSY	1	1	1	1	-	-	-	-
61	9006561	NUT, HEX #8-32	1	1	1	1	-	-	-	-
62	7011414-1F	CABLE, CONSOLE CONTROL	REF	REF	REF	REF	-	-	-	-
63	9009255-00	LABEL	1	1	1	1	1	1	1	1
64	3614833-	LABEL, WARNING	-	-	-	-	1	1	1	1

TITLE POWER SUPPLY ASSY (H777)
ASSY NO. E-UA-H777-0-0
SHEET 3 OF 3
SIZE A CODE PL NUMBER H777-0-0 REV N ECO NO
DIST

DIGITAL EQUIPMENT CORPORATION
MAYNARD, MASSACHUSETTS

PARTS LIST

MADE BY A. Rich DATE 19 Nov 75
CHECKED D. HEALY DATE 29 JUL 76
SECTION 1
ENG R Barry DATE 26 Aug 76
PROD R B King DATE 26 Aug 76
ISSUED SECT. 1

ITEM NO	DWG NO./PART NO.	DESCRIPTION	H777-AA	H777-AB	H777-BA	H777-BB	H777-CA	H777-CB	H777-DA	H777-DB
1	D-IA-7011248-0-0	CHASSIS ASSY P.S.	1	1	1	1	-	-	-	-
2	9007031-05	TIE WRAP	A/R	A/R	A/R	A/R	A/R	A/R	A/R	A/R
3	D-AD-7011075-0-0	A/C INPUT ASSY (120V)	1	-	1	-	-	-	-	-
4	D-AD-7011075-1-0	A/C INPUT ASSY (230V)	-	1	-	1	-	-	-	-
5	9007035	GROMMET CAT.	A/R	A/R	A/R	A/R	A/R	A/R	A/R	A/R
6	9006563	NUT, KEPS #8 - 32	2	2	2	2	2	2	2	2
7	E-MD-7413825-0-0	COVER, POWER SUPPLY	1	1	1	1	-	-	-	-
8	D-AD-7011073-0-0	+5V REGULATOR ASSY	1	1	1	1	-	-	-	-
9	D-CS-5411601-0-1	MOS. REC. H777	1	1	1	1	1	1	1	1
10	9006021-01	SCR. PHL HD PAN #6 - 32 x .31	4	4	2	2	3	3	1	1
11	9008509	STRAIN RELIEF	1	1	1	1	-	-	-	-
12	D-IA-7012320-0	POWER CORD (115V)	1	-	1	-	-	-	-	-
13	D-IA-7012320-1	POWER CORD (230V)	-	1	-	1	-	-	-	-
14	9006022-1	SCR, PHIL HD PAN #6-32 x .38	6	6	4	4	7	7	7	7
15	9006633	WASHER, INT. TOOTH #6	10	10	6	6	3	3	1	1
16	9009771-02	CLAMP	2	2	2	2	-	-	-	-
17	1209403-01	FAN, BOXER 115V, 50/60 HZ	1	1	1	1	1	1	1	1
18	9006020-2	SCR, PHIL FLAT HD #6 - 32 x .25	7	7	7	7	4	4	4	4
19	9008185	NUT, KEPS #6 - 32	—	—	—	—	2	2	2	2
~~20~~	~~9006023-1~~	~~SCR., PHIL HD PAN #6 - 32 x .44~~	~~4~~	~~4~~	~~4~~	~~4~~	~~4~~	~~4~~	~~4~~	~~4~~
21	9006074-3	SCR., PHIL TRUSS #10 - 32 x .62	4	4	4	4	4	4	4	4
22	9007651	WASHER, EXT. TOOTH #10	4	4	4	4	4	4	4	4

TITLE POWER SUPPLY ASSY (H777)
ASSY NO. E-UA-H777-0-0
SHEET 1 OF 3
SIZE A CODE PL NUMBER H777-0-0 REV N ECO NO H777-.. ML006
DIST

THE DRAWING AND SPECIFICATIONS, HEREIN, ARE THE PROPERTY OF DIGITAL EQUIPMENT CORPORATION AND SHALL NOT BE REPRODUCED OR COPIED OR USED IN WHOLE OR IN PART AS THE BASIS FOR THE MANUFACTURE OR SALE OF IT WITHOUT WRITTEN PERMISSION. COPYRIGHT © 1976, DIGITAL EQUIPMENT CORPORATION"

WIRE CHART

ITEM NO	DESCRIPTION AWG	DESCRIPTION COLOR	FROM POINT NO	FROM CONN	TO POINT NO	TO CONN
5	20	WHT	1	BD2-8	18	BD1-15
	14	BRN	2	2	9	1
	14	BLK	3	1	12	5
	14	ORN	4	3	13	7
	20	BRN	5	5	19	14
	20	BLK	6	4	20	16
	20	YEL	7	6	16	12
	20	VIO	8	7	17	13
	14	BLK	30	BD2-17	10	BD1-3
5	14	BLK	28	BD2-13	11	BD1-4
		RED	29	15	14	9
		RED	26	19	15	10
		BLK	25	14	21	17
		RED	24	16	22	19
	14	RED	27	BD2-20	23	BD1-20
7	18	BLU	1	BD1-21	*11	—
	14	BLK	2	BD1-18	*8	—
	18	RED	3	BD1-11	*14	—
30	14	RED	—	BD2-22	—	C2 (+)
7	18	GRY	4	BD1-8	*9	—
	18	WHT	5	BD1-6	*10	—
	14	RED	6	BD2-21	*13	—
	18	GRN	7	BD1-2	12	—
2:	14	GRN	—	C1(+)	—	C2(+)
2.5	14	GRN	—	C1(-)	—	C2(-)
23	14	RED	—	BD2-10	—	C1(+)
24	14	BLK	—	BD2-9	—	C1(-)
22	—	BARE	—	—	—	BD2-11
32	—	BARE	—	—	—	BD2-12
31	14	BLK	—	BD2-23	—	C2(-)

NOTES:

1. USE ITEM #16 (GROMMET) TO COVER RAW METAL EDGES UNDER CAPACITORS.
2. LEADS FROM ITEMS #22, 23 & 24 ARE TO BE CUT FLUSH WITH TOP OF CLAMPS ON ITEM #1. A1, A2, A3 & A4
3. * ASTERISK INDICATES THAT THESE CONN. ALREADY HAVE BEEN MADE ON PLUG P1 ON HARNESS D-IA-7011560-0-C THEY ARE SHOW FOR REF ONLY.
4. ITEMS #17 & #13 ARE TO HAVE THEIR ELECTRICAL CONNECTIONS TORQUED TO 12 IN-LBS (-0,+10) IN-LBS.
5. BRING SCREW TO A NO SLACK POSITION, THEN TIGHTEN WITH 1/2 TO 3/4 TURN ONLY.
6. ITEMS #33 & #34 ARE NOT SHOWN

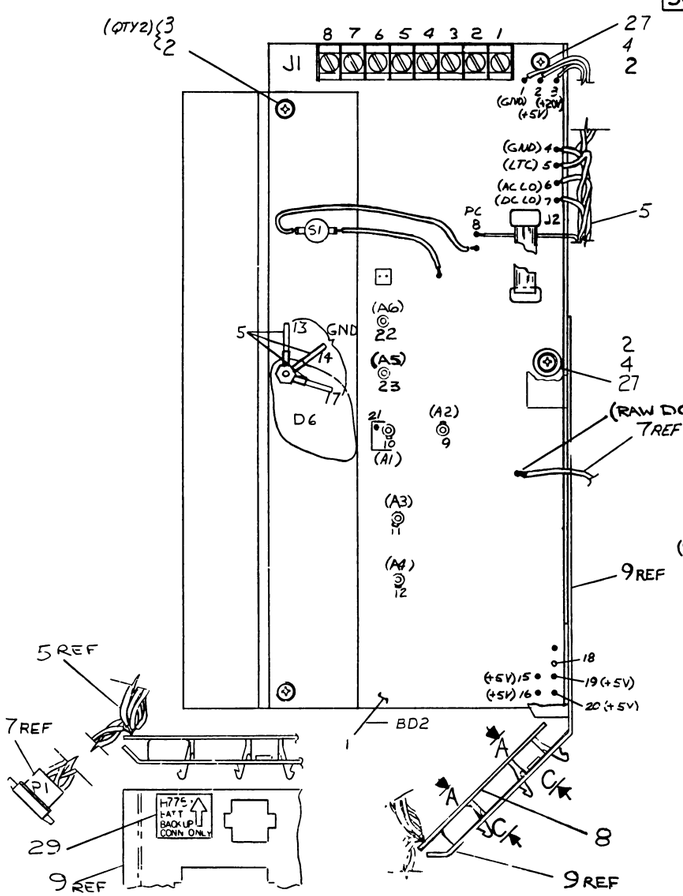

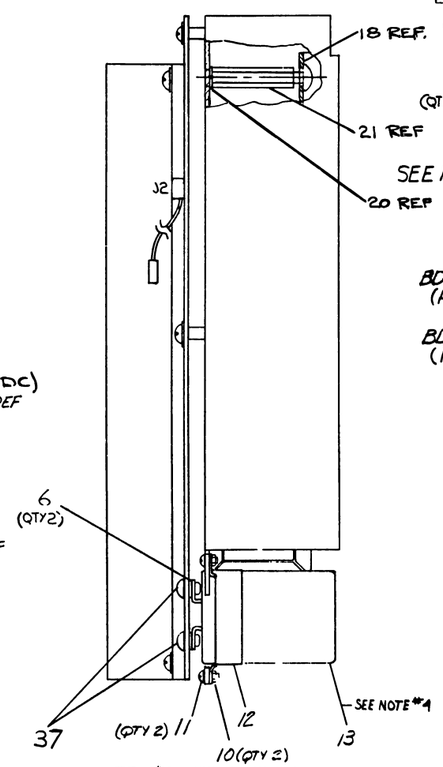

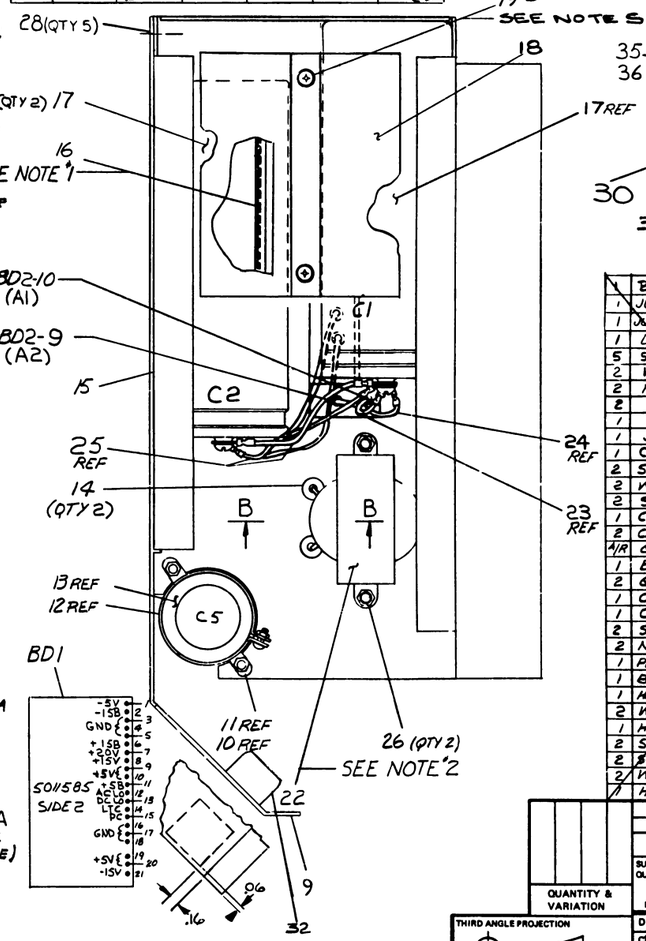

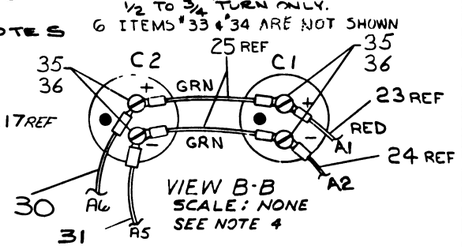

OFF SHEET PARTS LIST
SEE A-PL-7012909-0-0

1	BUMPER	9009624	32
1	JUMPER, BLK	B-IA-7011802-0-0	31
1	JUMPER, RED	B-IA-7011801-0-0	30
1	DECAL, BATT BACKUP	A-DC-7416911-0-0	29
5	SCR FLAT HD #6-32 x .25	9006020-2	28
2	WASHER NYLON #8	9006708	27
2	NUT KEPS #8-32	9006568	26
2	JUMPER (GRN)	B-IA-7011800-0-0	25
1	JUMPER (BLK)	B-IA-7011802-0-0	24
1	JUMPER (RED)	B-IA-7011801-0-0	23
1	CHOKE	1613584	22
2	SPACER HEX #8-32 X 1.25	9009603	21
2	WASHER INT TOOTH LOCK #8	9006634	20
2	SCR PHIL HD TRUSS 8-32 X .38L	9009836-1	19
1	CLAMP CAPACITOR	C-MD-7417406-0-0	18
2	CAPACITOR 24 KUF 50V	1010702	17
A/R	GROMMET CATERPILLAR	9007035	16
1	BRACKET CAPACITOR	E-IA-7413743-1-0	15
2	GROMMET RUBBER	9007017	14
1	CAPACITOR 3900UF/16.0V (65)	1012740-00	13
1	CLAMP CAPACITOR	9009052	12
2	SCR PHIL PAN HD #6-32X.25L	9006020-1	11
2	NUT KEPS #6-32	9008185	10
1	PLATE, CAPACITOR CONN SIDE	D-IA-7417017-0-0	9
1	BOARD, PWR DISTR. H777	D-CS-5011584-0-1	8
1	HARNESS BD NOS REG PWR DIST	D-IA-7011560-0-0	7
2	WASH 1375 O.D.X 1372 IDX 036	9006660	6
1	HARNESS H777 +5V REG	D-IA-7011415-0-0	5
2	SCR PHIL HD PAN #6-32 X .31L	9006021-1	4
2	SCR PHIL HD PAN #6-32 X .50L	9006024-1	3
2	WASHER, INT TOOTH LOCK #6	9006633	2
1	H777 +5V REG (REV E UP)	D-CS-5412667-0-1	1
	DESCRIPTION	DWG/PART NO.	ITEM NO.

UNLESS OTHERWISE SPECIFIED DIMENSIONS ARE IN INCHES

ANGLES ±0° 30'	CLASS OF ACCURACY (CHECK ONE)	NOMINAL DIMENSION RANGE INCHES: OVER 0 TO 0.2	OVER 0.2 TO 1.2	OVER 1.2 TO 3.0	OVER 3.0 TO 12.0	OVER 12.0 TO 40.0	OVER 40.0 TO 80.0
SURFACE QUALITY IN MICROINCHES	MEDIUM	±.004	±.008	±.012	±.016	±.024	±.04
	PREFERRED	±.012	±.016	±.020	±.04	±.063	±0.1

QUANTITY & VARIATION

THIRD ANGLE PROJECTION

REMOVE BURRS AND BREAK SHARP CORNERS

DO NOT SCALE DWG

MATERIAL

FINISH

DRAWN 13-OCT-76
CHK'D 23-AUG-76
ENG 13-OCT-76
PROJ. ENG 13-OCT-76
PROD 13-OCT-76

FIRST USED ON H777-C & D

digital

TITLE +5V REG ASSY

NEXT HIGHER ASSY. D-IA-H777-0-0

SCALE

SHEET 1 OF 1

SIZE D | CODE AD | NUMBER 7012909-0-0 | REV. E

DIST.

REV	REVISION HIST	
A	H777-B-000006	R COURTMANCHE
B	H777 000002	B COURTEMANCHE
C	7012909-000011	R DAY
D	7012909-000021	B GIST
E	7012909-000003	E CROCKER

DIGITAL EQUIPMENT CORPORATION
MAYNARD, MASSACHUSETTS

PARTS LIST

MADE BY S. ROCHA DATE 29 JUL 76	CHECKED D. HEALY DATE 2 AUG 76	SECTION 1
ENG R. COURTMACHE DATE 13 SEP 76	PROD R. BARRY DATE 13 SEP 76	ISSUED SECT. 1

ITEM NO	DWG NO./PART NO.	DESCRIPTION	QUANTITY/VARIATION
1	D-CS-5412667-0-1	H777 +5V REG (REV & UP)	1
2	9006633	WASHER, INT TOOTH LOCK #6	4
3	9006025-01	SCR PHIL HD PAN #6-32 x .62L	2
4	9006023-01	SCR PHIL HD PAN #6-32 x .44L	2
5	D-IA-7011415-0-0	HARNESS H777 +5V REG	1
6	9006660	WASH, .375 O.D. x .137 I.D. x .036	2
7	D-IA-7011560-0-0	HARNESS BD MOS REG PWR DIST	1
8	D-CS-541[illegible]586-0-1	BOARD, PWR DISTR. H777	1
9	D-IA-7417017-0-0	PLATE, CAPACITOR CONN SIDE	1
10	9008185	NUT KEPS #6-32	2
11	9006020-1	SCR PHIL PAN HD #6-32 x .25L	2
12	9009052	CLAMP CAPACITOR	1
13	1012740-00	CAPACITOR 3900uf 16.0V (65)	1
14	9007017	GROMMET RUBBER	2
15	E-IA-7413743-1-0	BRACKET CAPACITOR	1
16	9007035	GROMMET CATERPILLAR	A/R
17	1010702	CAPACITOR 24Kuf 50V	2
18	C-MD-7417408-0-0	CLAMP CAPACITOR	1
19	9009836-1	SCR PHIL HD TRUSS #8-32 x .38L	2
20	9006634	WASHER INT TOOTH LOCK #8	2
21	9008258	SPACER HEX #8-32 x 1.375	2
22	1612584	CHOKE	1

TITLE	ASSY NO.	SIZE	CODE	NUMBER	REV
+5V REG ASSY	D-AD-7012909-0-0 SHEET 1 OF 2	A	PL	7012909-0-0 DIST.	E ECO NO 7012909 ML003

DEC FORM DEC 16-(325)-1031-N870
DRA 110

DIGITAL EQUIPMENT CORPORATION
MAYNARD, MASSACHUSETTS

PARTS LIST

MADE BY S. ROCHA DATE 29 JUL 76	CHECKED D. HEALY DATE 2 AUG 76	SECTION 1
ENG R. COURTMACHE DATE 13 SEP 76	PROD R. BARRY DATE 13 SEP 76	ISSUED SECT. 1

ITEM NO	DWG NO./PART NO.	DESCRIPTION	QUANTITY/VARIATION
23	B-IA-7011801-0-0	JUMPER (RED)	1
24	B-IA-7011802-0-0	JUMPER (BLK)	1
25	B-IA-7011800-0-0	JUMPER (CRN)	2
26	9006563	NUT KEPS #8-32	2
27	9006707	WASHER NYLON #6	2
28	9000039-07	SCR, FLAT HD #6-32 x .25	5
29	A-DC-7416911-0-0	DECAL, BATT BACKUP	1
30	B-IA-7011801-0-1	JUMPER, RED	1
31	B-IA-7011802-0-1	JUMPER, BLK	1
32	9009624	BUMPER	1
33	9009255-00	LABEL	1
34	9007031	CABLE TIE	2
35	9006071-01	SCR PAN HD #10-32 x .37	4
36	9006636	WASHER LOCK INT .380 OD x .200 ID x .022THK	4
37	9009667	SCR, SEMS, SLOTTED BINDER HD #10-32 x 5/16	2

TITLE	ASSY NO.	SIZE	CODE	NUMBER	REV	ECO NO
+5V REG ASSY	D-AD-7012909-0-0 SHEET 2 OF 2	A	PL	7012909-0-0 DIST.	E	7012909 ML003

THIS DRAWING AND SPECIFICATION, DESIGN, ARE THE PROPERTY OF DIGITAL EQUIPMENT CORPORATION AND SHALL NOT BE REPRODUCED OR COPIED OR USED IN WHOLE OR IN PART AS THE BASIS FOR THE MANUFACTURE OR SALE OF ITEMS WITHOUT WRITTEN PERMISSION. COPYRIGHT © 1975 DIGITAL EQUIPMENT CORPORATION

NOTES:

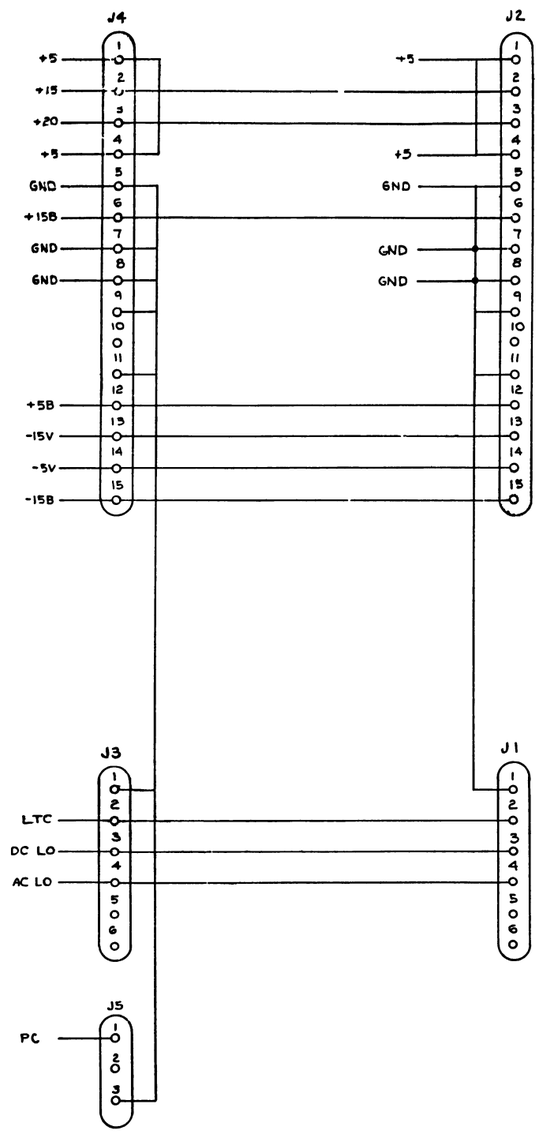

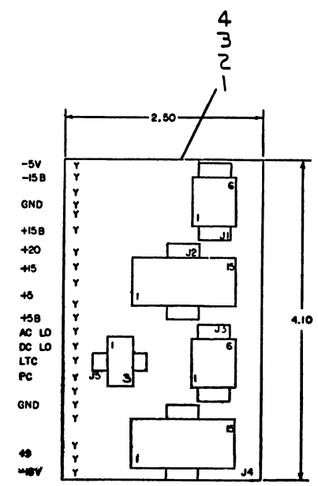

REF		X-Y COORDINATE HOLE LOCATION	K-CO-5411586-0-4	1
REF		ASSY DRILLING HOLE LAYOUT	D-AH-5411586-0-5	2
REF		MODULE ECO HISTORY	B-MH-5411586-0-6	3
1		ETCHED CIRCUIT BOARD	5011585	4
2	J2,J4	CONN.,MATE-N-LOCK,15 PIN HOUSING	1209350-15	5
2	J1,J3	CONN.,MATE-N-LOCK,6 PIN HOUSING	1209350-06	6
45		PIN,CONTACT,MATE-N-LOCK	1209456-01	7
1	J5	CONN.,MATE-N-LOCK,3 PIN HOUSING	1209350-03	8

IC TYPE	GND	+5V
GND AND 5V ARE USUALLY PIN 7 AND 14 RESPECTIVELY EXCEPTIONS ARE STATED ABOVE		

IC PIN LOCATIONS

FIRST USED ON OPTION MODEL: 11Ø4 PWR. SUPPLY

ETCH BOARD REV: D

QTY	REF DESIGNATION	DESCRIPTION	PART NO	ITEM NO

PARTS LIST

CHANGE NO	REV	DCC NO	EIA NO.	DEC NO	EIA NO.

REVISIONS

SEMICONDUCTOR CONVERSION CHART

DRN. D. Allen DATE 2/13/75
CHKD. Hudson DATE 2-23-75
ENGR. P. Barry DATE 2-2-75
PROJ. ENG. P. Barry DATE 2-2-75
PROD. DATE

NEXT HIGHER ASSY

SCALE NONE
SHEET 1 OF 1

digital EQUIPMENT CORPORATION MAYNARD MASSACHUSETTS

TITLE BOARD, POWER DISTRIBUTION H777

SIZE D CODE CS NUMBER 5411586-0-1 REV. C

DIST

"THIS DRAWING AND SPECIFICATIONS, HEREIN, ARE THE PROPERTY OF DIGITAL EQUIPMENT CORPORATION AND SHALL NOT BE REPRODUCED OR COPIED OR USED IN WHOLE OR IN PART AS THE BASIS FOR THE MANUFACTURE OR SALE OF ITEMS WITHOUT WRITTEN PERMISSION.
COPYRIGHT © 1977 DIGITAL EQUIPMENT CORPORATION"

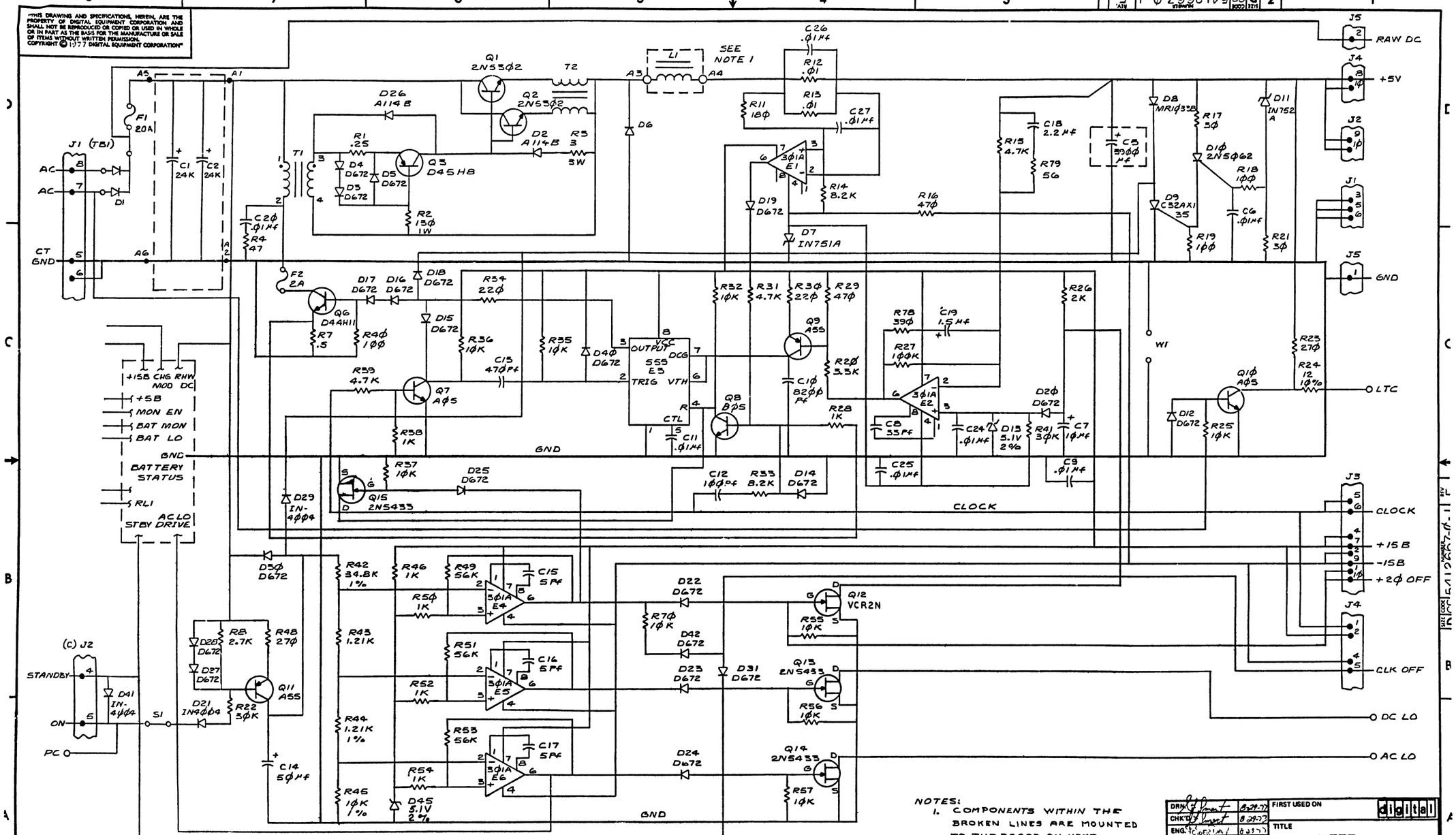

NOTES:
1. COMPONENTS WITHIN THE BROKEN LINES ARE MOUNTED TO THE BOARD ON NEXT HIGHER ASS'Y.

REVISIONS						
CHK	CHANGE NO	REV				
	5412667-00001	B	5412667-00002	C	5412667-ML003	D
	B. GIST		B. GIST		E. CROCKER	
					A. BARON	
					A. BARON	

5412667-ML004	E	5412667-ML005	F
A. BARON		A. BARON	

DRN B. Gist 8-29-77
CHK'D 8-29-77
ENG. 8-29-77
PROJ. ENG. 8-29-77
PROD 8-29-77

FIRST USED ON digital

TITLE H777 +5V REGULATOR

SIZE D CODE CS NUMBER 5412667-0-1 REV. F

SCALE — SHEET 1 OF 2 DIST.

DEC FORM NO. DRG 150

"THIS DRAWING AND SPECIFICATIONS, HEREIN, ARE THE PROPERTY OF DIGITAL EQUIPMENT CORPORATION AND SHALL NOT BE REPRODUCED OR COPIED OR USED IN WHOLE OR IN PART AS THE BASIS FOR THE MANUFACTURE OR SALE OF ITEMS WITHOUT WRITTEN PERMISSION. COPYRIGHT © 1977 DIGITAL EQUIPMENT CORPORATION"

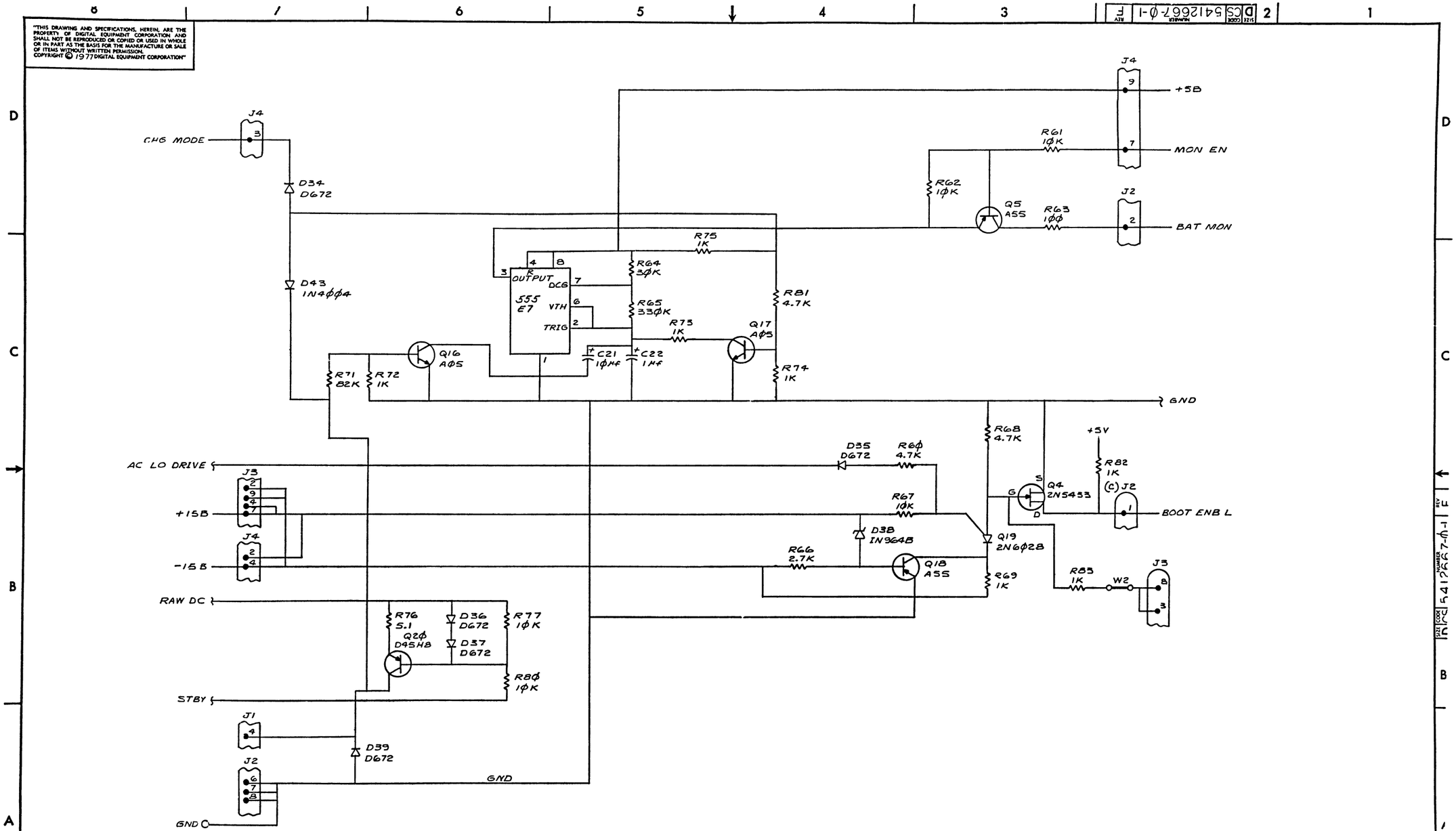

REVISIONS		
CHK	CHANGE NO	REV

(BATTERY STATUS CRKT'S)

TITLE	SIZE	CODE	NUMBER	REV.
H777 +5V REGULATOR	D	CS	5412667-Ø-1	F
SCALE — SHEET 2 OF 2	DIST.			

"THIS DRAWING AND SPECIFICATIONS, HEREIN, ARE THE PROPERTY OF DIGITAL EQUIPMENT CORPORATION AND SHALL NOT BE REPRODUCED OR COPIED OR USED IN WHOLE OR IN PART AS THE BASIS FOR THE MANUFACTURE OR SALE OF ITEMS WITHOUT WRITTEN PERMISSION. COPYRIGHT © 1970 DIGITAL EQUIPMENT CORPORATION"

LEGEND	
PART NO	VARIATION
7012910-0	120 V
7012910-1	230 V

WIRE CHART

ITEM NO	DESCRP AWG	DESCRP COLOR	FROM CONN	FROM WITH	TO CONN	TO WITH	REMARKS
22	18	OR/WH	K1-4	SOLD,31	*TB2-3S	SOLD	5 1/2"L
23	18	GR/WH	K1-6	↓	*TB2-4S	SOLD	5"L
24	18	WH/OR	K1-7		TB2-5H	25,	9"L
26	18	WH/GR	K1-9		TB2-6H	25,	9"L
27 (SEE NOTE #2, SEE DETAIL "E")	18	GRY	K1-A	↓	—	42	13 1/2"L
	TWP	BLK	K1-B	SOLD,31	—		13 1/2"L
46	18	GR/OR	G2	SOLD	*TB2-6S	SOLD	6"L
47	18	GR/BL	F1-1	SOLD,31	*TB2-4S	SOLD	3"L
43	18	BRN	CB1(-2) LOAD	28.31	*TB2-6S	SOLD	7 1/2"L
	TWP	BLU	CB1(-1) LOAD	28.31	*TB2-1S	SOLD	7 1/2"L
45	14	BLU	CB1(+1) LINE		NOTE 6	—	17"L
	TWP	BRN	CB1(+2) LINE		NOTE 6	—	17"L
15 (SEE NOTE #2, SEE DETAIL "C")	18	WHT	*TB2-7S	SOLD	J2-2	30,32	10"L
	TWP	BLK	*TB2-5S	SOLD	J2-1	30,32	9"L
15	18	WHT	*TB2-7S	SOLD	J3-2	30,32	10"L
	TWP	BLK	*TB2-5S	SOLD	J3-1	30,32	15 1/2"L

ITEM NO	DESCRP AWG	DESCRP COLOR	FROM CONN	FROM WITH	TO CONN	TO WITH	REMARKS
1	18	BLK	T1	—	TB2-1H	—	—
	TWP	BK/WH	↓		TB2-3H	—	—
	18	RED	↓		TB2-2H	—	—
	TWP	RD/WH	T1		TB2-4H	—	—
47	18	GY/BL	G2	SOLD	F1-2	SOLD,31	4"L
35	18	BLK	TB2-1H	—	TB2-2H	—	120V
36	18	WHT	TB2-3H	—	TB2-4H	—	120V
35	18	BLK	TB2-2H	—	TB2-3H	—	230V
13	22	BARE	R1-A	—	G3	SOLD,33	
13	22	BARE	R1-B	—	G2	SOLD,33	
48	18	BL/WH	K1-8	SOLD,31	TB2-1S	25	4"L
49	18	WH/BL	K1-5	SOLD,31	TB2-7H	25	5 1/2"L

7012910-0	120V
7012910-1	230V

* INDICATES SOLDER CONN. SHARED WITH OTHER CONN. WITH SAME COMMON CONN.

NOTES:

1. ~~COVER ITEM #28 WITH ITEM #31 COVER ENTIRE CONN.~~
2. TWISTED PAIR WIRE TO HAVE A MIN OF 8 TWIST PER FT AS PER WIRE CHART.
3. ALL CONNECTIONS TO TB2 ARE TO BE MADE FROM SIDE INDICATED BY ARROW.
4. USE TIE WRAPS (ITEM #38) AS NEEDED.
5. T1 PRIMARY WIRES TO TB2 MUST BE ROUTED BY ITEM 4
6. NO CONNECTION IS MADE AT THIS ASSY LEVEL REFER TO PRINT E-UA-H777-0-0

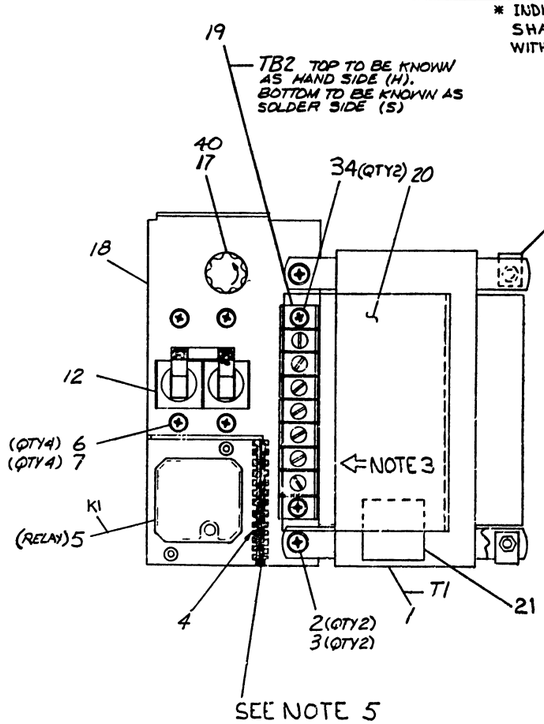

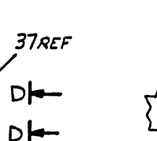

VIEW D-D
TYP-4 PLACES
(BOTTOM FEET ONLY)
SCALE: NONE

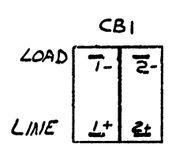

VIEW A-A
REAR VIEW OF CB1 (ITEM #12) FOR WIRING ONLY.

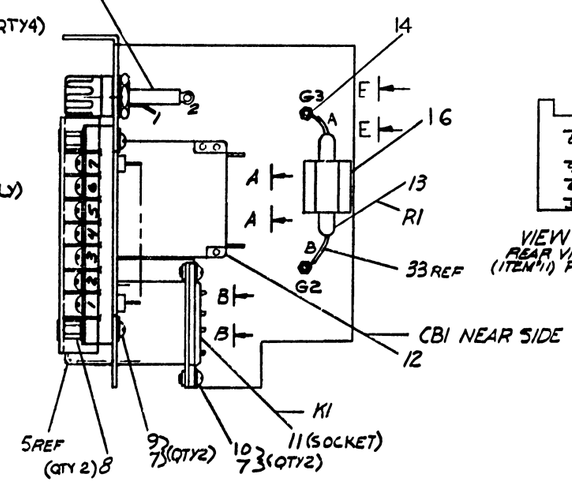

SIDE VIEW
TRANSFORMER (ITEM #1) REMOVED FOR CLARITY.

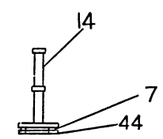

VIEW E-E
TYP. 2 PLACES

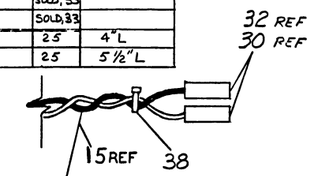

DETAIL "C"
2 PLACES. SEE CHART

SEE NOTE 2

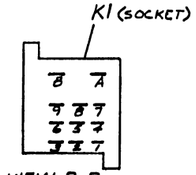

VIEW B-B
REAR VIEW OF K1 (SOCKET) (ITEM #11) FOR WIRING ONLY.

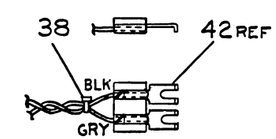

DETAIL "E"
SEE CHART

OFF SHEET PARTS LIST SEE A-PL-7012910-0-0

DESCRIPTION	DWG/PART NO.	ITEM NO

UNLESS OTHERWISE SPECIFIED DIMENSIONS ARE IN INCHES

ANGLES 90° 30'	CLASS OF ACCURACY (CHECK ONE)	OVER 0 TO 0.3	OVER 0.3 TO 1.2	OVER 1.2 TO 4.0	OVER 4.0 TO 12.0	OVER 12.0 TO 40.0	OVER 40.0 TO 80.0
BURFACE QUALITY IN MICROINCHES	MEDIUM	±.004	±.008	±.012	±.018	±.024	±.04
	PRESERVED	±.012	±.016	±.026	±.04	±.063	±0.1

QUANTITY & VARIATION

THIRD ANGLE PROJECTION

REMOVE BURRS AND BREAK SHARP CORNERS

DO NOT SCALE DWG

MATERIAL —

FINISH —

DRW.	A. Rocha	29 JUL 76
CHK'D		2 AUG 76
ENG.		9 AUG 76
PROJ. ENG	R. Burns	12 AUG 76
PROD.		12 AUG 76
NEXT HIGHER ASSY.	D-UA-H777-0-0	
SCALE	—	
SHEET	1 OF 2	

FIRST USED ON H777-C & D

digital

TITLE A/C INPUT ASSY (120V/230V)

SIZE	CODE	NUMBER	REV.
D	AD	7012910-0-0	

DIST

REVISIONS			
CHK	CHANGE NO.		REV.
	C5(SIGNATED		
V.C.	H777-6-1/06/04		
K.T.	H777-00002	E. COURTEMANCHE	E
	7012910-00001	G. POTTER	F
	7012910-00002	R. DAY	H
	7012910-00003	R. DAY	J
	7012910-00004	B. GIST	K
	7012910-00005	B. GIST	L
	7012910-ML006	A. BARON	M

DEC FORM NO. 6MD 100-C

"THIS DRAWING AND SPECIFICATIONS, HEREIN, ARE THE PROPERTY OF DIGITAL EQUIPMENT CORPORATION AND SHALL NOT BE REPRODUCED OR COPIED OR USED IN WHOLE OR IN PART AS THE BASIS FOR THE MANUFACTURE OR SALE OF ITEMS WITHOUT WRITTEN PERMISSION. COPYRIGHT © 1976 DIGITAL EQUIPMENT CORPORATION"

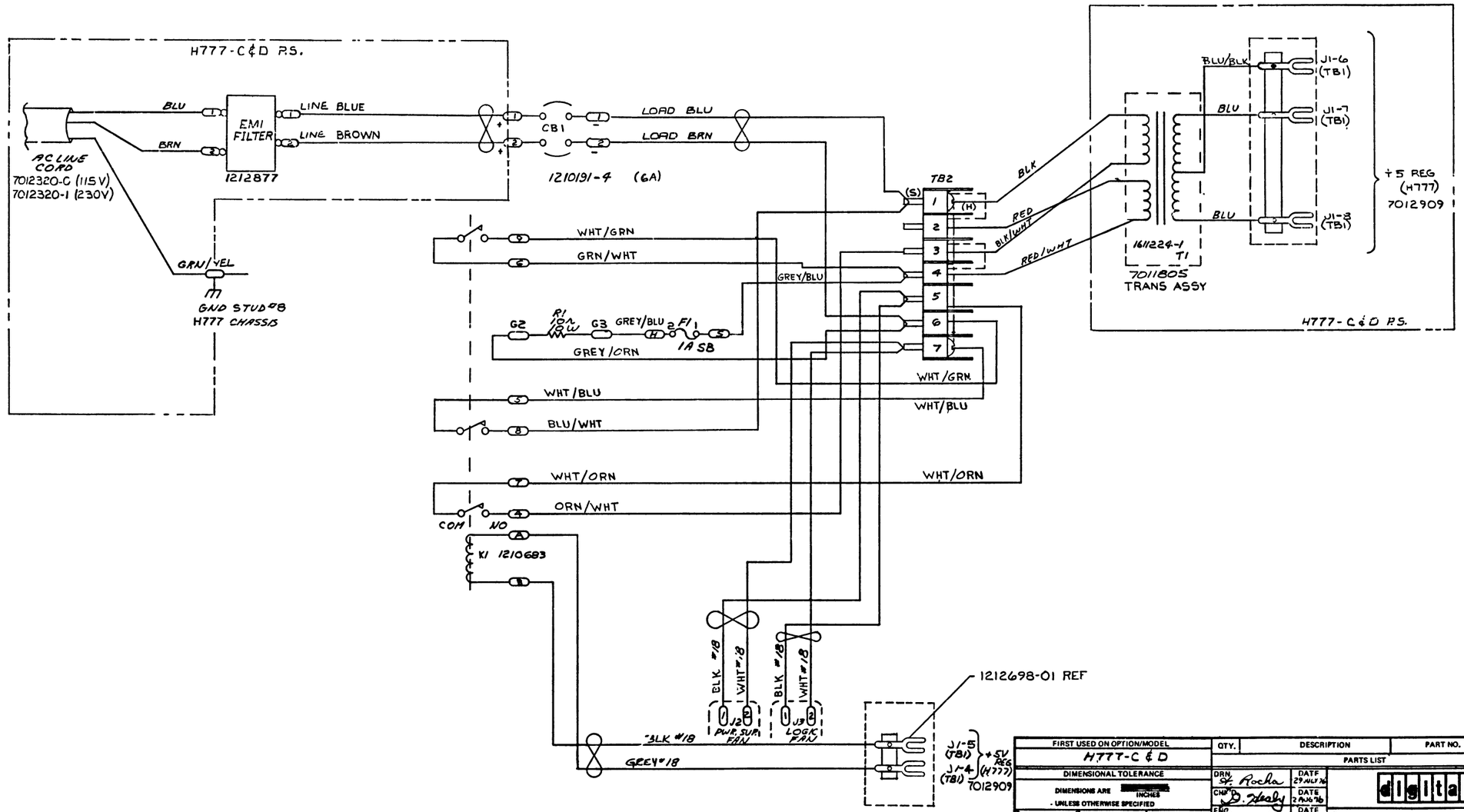

FIRST USED ON OPTION/MODEL	QTY.	DESCRIPTION	PART NO.	ITEM NO.
H777-C & D		PARTS LIST		

DIMENSIONAL TOLERANCE
DIMENSIONS ARE [redacted] INCHES
- UNLESS OTHERWISE SPECIFIED

MILLIMETERS	INCHES	ANGLES
X.XX ±0.10, X.X ±0.8, ±0.5	.XXX ±.005, .XX ±.02, ±.01	±0° 30'

THIRD ANGLE PROJECTION

REMOVE BURRS AND BREAK SHARP CORNERS SURFACE QUALITY ✓

MATERIAL

FINISH

		DATE
DRN.	S. Rocha	29 JULY 76
CHK'D	D. Healy	2 AUG 76
ENG.	[illegible]	7 AUG 76
PROJ. ENG.	[illegible]	13 SEP 76
PROD.	[illegible]	13 SEP 76

NEXT HIGHER ASSY.

SCALE

SHEET 2 OF 2

digital

TITLE
A/C INPUT ASSY
(120V/230V)

SIZE	CODE	NUMBER	REV.
D	AD	7012910-0-C	M

DIST

REVISIONS: REV / CHANGE NO / CHK

DIGITAL CODE AD NUMBER 7012910-0-0 REV M

DIGITAL EQUIPMENT CORPORATION
MAYNARD, MASSACHUSETTS

PARTS LIST

MADE BY A. Rocha DATE 19 JULY 76
CHECKED D. HEALY DATE 27 JUL 76
SECTION 1
ENG R. Barry DATE 9-17-76
PROD R.B. King DATE 21 Sep 76
ISSUED SECT. 1

ITEM NO	DWG NO./PART NO.	DESCRIPTION	7012910-0	7012910-1
1	C-IA-7011805-0-0	TRANSFORMER ASSY	1	1
2	9006037-01	SCR PHIL PAN HD #8 - 32 x .38	2	2
3	9006634	WASHER INT. TOOTH LOCK #8	2	2
4	9007035	GROMMET CATERPILLAR	A/R	A/R
5	1210683-00	RELAY 12V 3P 10A	1	1
6	9006020-01	SCR PHIL HD PAN #6-32 x .25	4	4
7	9006633	WASHER INT. TOOTH LOCK #6	10	10
8	9006842	SPACER HEX #6 - 32 x .31	2	2
9	9007794-01	SCR PHIL HD PAN #6 - 32 x .69	2	2
10	9006021-01	SCR PHIL HD PAN #6 - 32 x .31	2	2
11	1212789	SOCKET, RELAY	1	1
12	1210191-4	CIRCUIT BREAKER, 6A	1	1
13	1300173	RESISTOR, 10 OHM, 10W	1	1
14	9006966	TERMINAL TURRET INS	2	2
15	9107430-09	WIRE #18 AWG INS TW/PR (WHT/BLK)	A/R	A/R
16	9009771-2	CLAMP (RESISTOR) 3/8 I.D. SELF ADH.	1	1
17	1212893-00	HOLDER, FUSE 20A, 300V	1	1
18	D-IA-7417219-0-0	BRACKET, COMPONENT	1	1
19	1212788	BARRIER STRIP 7 POS	1	1
20	B-IA-7414743-1-0	SHIELD, TERM.	1	1
21	9008264	MOUNT TIE WRAP	1	1
22	9107410-39	WIRE #18 AWG INS ORN/WHT	A/R	A/R

TITLE A/C INPUT ASSY (120V/230V)
ASSY NO. D-AD-7012910-0-0
SHEET 1 OF 3
SIZE A CODE PL NUMBER 7012910-0-0 REV M ECO NO 7012910 ML 006
DIST

DEC FORM DEC 16-(325)-1031-N870
DRA 110

DIGITAL EQUIPMENT CORPORATION
MAYNARD, MASSACHUSETTS

PARTS LIST

MADE BY A ROCHA DATE 19-JULY-76
CHECKED D HEALY DATE 27-JULY-76
SECTION 1
ENG R BARRY DATE 17-SEPT-76
PROD R B KING DATE 21-SEPT-76
ISSUED SECT. 1

ITEM NO	DWG NO./PART NO.	DESCRIPTION	7012910-0	7012910-1
45	C-IA-7417288-0-0	A/C CONN HARNESS	1	1
46	9107410-83	WIRE #18 AWG INS GREY/ORN	A/R	A/R
47	9107410-86	WIRE #18 AWG INS GREY/BLU	A/R	A/R
48	9107410-69	WIRE #18 AWG INS BLU/WHT	A/R	A/R
49	9107410-96	WIRE #18 AWG INS WHT/BLU	A/R	A/R

TITLE A/C INPUT ASSY. (120V/230V)
ASSY NO. D-AD-7012910-0-0
SHEET 3 OF 3
SIZE A CODE PL NUMBER 7012910-0-0 REV M ECO NO
DIST

DEC FORM DEC 16-(325)-1031-N870
DRA 110

DIGITAL EQUIPMENT CORPORATION
MAYNARD, MASSACHUSETTS

PARTS LIST

MADE BY A Rocha DATE 19 JULY 76
CHECKED D. HEALY DATE 27 JUL 76
SECTION 1
ENG R Barry DATE 9-17-76
PROD R.B. King DATE 21 Sep 76
ISSUED SECT. 1

ITEM NO	DWG NO./PART NO.	DESCRIPTION	7012910-0	7012910-1
23	9107410-59	WIRE 18 AWG INS GRN/WHT	A/R	A/R
24	9107410-93	WIRE 18 AWG INS WHT/GRN	A/R	A/R
25	9007929	RING CRIMP (RED INS)	2	2
26	9107410-95	WIRE 18 AWG INS WHT/GRN	A/R	A/R
27	9107430-08	WIRE 18 AWG INS (GRY/BLK) TW/PR	A/R	A/R
28	9007970	CONN FASTON (RED INS.)	2	2
~~29~~	~~1210191-2~~	~~CIRCUIT BREAKER, 2.5A~~	~~-~~	~~1~~
30	1210820-2	HOUSING TERM. FASTAB	4	4
31	9107305-02	TUBING SHRINK (RED)	A/R	A/R
32	1210820-1	HOUSING SOCKET, FASTAB	4	4
33	9107278-02	TUBING INS (RED)	A/R	A/R
34	9008020-02	SCR, PHL, FLAT HD, 6 - 32 x .19	2	2
35	B-IA-7011797-0-0	JUMPER ASSY (BLK 2")	1	1
36	B-IA-7011798-0-0	JUMPER ASSY (WHT 2")	1	-
37	9007786	NUT #10 - 32	4	4
38	9007031	TIE WRAP	A/R	A/R
~~39~~	~~9107253-09~~	~~TUBING, SHRINK (WHT)~~	~~A/R~~	~~A/R~~
40	9007212	FUSE, 1A, 250V S.B.	1	1
~~41~~	~~9107333-02~~	~~TUBING, SHRINK (ORN)~~	~~A/R~~	~~A/R~~
42	1212698-01	STRIP. FANNING (2 POSITION)	1	1
43	9107430-16	WIRE #18 AWG INSTWP BRN, BLU	A/R	A/R
44	9006656	WASHER, FLAT	2	2

TITLE A/C INPUT ASSY (120V/230V)
ASSY NO. D-AD-7012910-0-0
SHEET 2 OF 3
SIZE A CODE PL NUMBER 7012910-0-0 REV M ECO NO
DIST

DEC FORM DEC 16 (325) 1031 N870
DRA 110

"THIS DRAWING AND SPECIFICATIONS HEREIN, ARE THE PROPERTY OF DIGITAL EQUIPMENT CORPORATION AND SHALL NOT BE REPRODUCED OR COPIED OR USED IN WHOLE OR IN PART AS THE BASIS FOR THE MANUFACTURE OR SALE OF ITEMS WITHOUT WRITTEN PERMISSION. COPYRIGHT © 1975 DIGITAL EQUIPMENT CORPORATION"

NOTES:

1. SEE PARTS LIST FOR CURRENT HDW. D7,D8,D21
2. USE TRANSIPAD DEC#9007201 UNDER Q3,Q11,Q17,Q18
3. TORQUE Q1,Q9, D7, D8, D11, & D21 HARDWARE TO 6-8 IN-LBS.

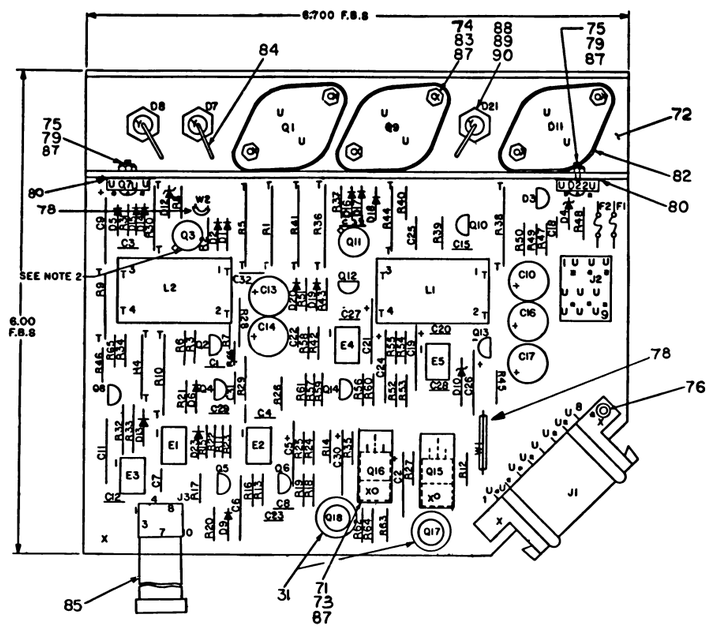

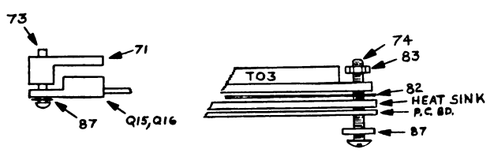

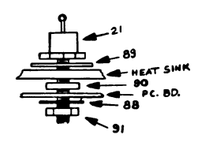

SIDE VIEW MOUNTING D7, D8 AND D21

1	R18	RESISTOR, 8.2K, 1/4W, 5%	1303179	51	REF		X-Y COORDINATE HOLE LOCATION	K-CO-5411601-0-4	1
1	R28	RESISTOR, 4.99K, 1/4W, 1% MF	1305324	52	REF		ASSY/DRILLING HOLE LAYOUT	D-AH-5411601-0-5	2
2	R1,R36	RESISTOR, 1, 2W, 5% WW	1305428	53	REF		MODULE ECO HISTORY	B-MH-5411601-0-6	3
1	R55	RESISTOR, 5/1, 1/4W, 5%	1309422	54	1		ETCHED CIRCUIT BOARD	5011600	4
1	R5	RESISTOR, .15Ω, 2W, 10%	1310147	55	2	C20,C4	CAPACITOR, 33pf, 100V, 5%	1000009	5
1	R32	RESISTOR, 2.21K, 1/4W, 1%	1310631	56	1	C8	CAPACITOR, 100pf, 100V, 5%	1000016	6
1	D22	DIODE 2N4441 SCR	1505867	57	1	C7,	CAPACITOR, 220pf, 100V, 5%	1000021	7
3	Q3,Q11,Q17	TRANSISTOR, 2N4036	1509700	58	1	C25	CAPACITOR, .1mf, 100V, 20% DISC	1000030	8
1	Q18	TRANSISTOR, DEC 3734	1510062	59	7	C3,C12,C18,C27,C28,C32, C33	CAPACITOR, .01mf, 100V, DISC	1001810-01	9
1	Q7	TRANSISTOR, MJE3055	1510555	60					
7	Q4,Q5,Q6,Q8,Q12 THRU Q14	TRANSISTOR, XA05	1510705	61	6	C2,C5,C9,C19,C26,C30	CAPACITOR, 1mf, 35V, 10%	1001778	10
2	Q2,Q10	TRANSISTOR, XB56	1510706-1	62	2	C29,C31	CAPACITOR, .47mf, 25V, 20%	1010279	11
1	Q16	TRANSISTOR, D45H8	1510708	63	1	C24	CAPACITOR, 10mf, 20V, 10%	1004813	12
2	Q1,Q9	TRANSISTOR, 2N5038	1510969	64	2	C6,C21	CAPACITOR, .01mf, 100V, 10% MYLAR	1005784	13
1	Q15	TRANSISTOR, D44H5	1512722	65	1	C11	CAPACITOR, .015mf, 50V, 2% POLYC	1010646	14
2	L1,L2	INDUCTOR, 500uh	1612593	66	2	C13,C14	CAPACITOR, 390mf, 20V	1012607-06	15
2	E2,E5	I.C. L.M. 301A	1910282	67	1	C17	CAPACITOR, 1200mf, 6.3V	1012607-01	16
3	E1,E3,E4	I.C. L.M. 555	1911944	68	2	C10,C16	CAPACITOR, 180mf, 50V	1012607-02	17
1	C22	CAPACITOR, 470pf, 100V, 5%	1000024	69	1	D4	DIODE IN752A	1102808	18
1	C23	CAPACITOR, 180pf, 100V 5%	1000020	70	11	D1,D2,D6,D13 THRU D17,D19, D20,D23	DIODE D672	1105275	19
2		HEAT SINK	7414765	71					
1		HEAT SINK	7413842	72	1	D9	DIODE IN4004	1105796	20
2		SCREW #4-40 x 7/16 LG	9006012-1	73	3	D7,D8,D21	DIODE, IN3880	1109440	21
6		SCREW #4/40 x 1/2 LG.	9006013-1	74	1	D12	DIODE IN4742	1109502	22
2		SCREW, NYLON #4/40 x.375LG.	9006401-4	75	1	D10	DIODE Izt 5ma 5.1V, 2%	1110713	23
1		EYELET	9009000	76	1	D3	DIODE 2N5062	1110968	24
4		TRANSIPAD	9007201	77	2	D5,D18	DIODE A114B	1112595-01	25
A/R		TUBING	9107256-11	78	1	D11	DIODE DUAL	1112723-00	26
2		NUT, NYLON #4/40	9007992	79	2	F1,F2	FUSE 5A	1209070	27
2		SILPAD TO 22	1213071-06	80	1	J1	CONN. 8 PIN MATE-N-LOC	1209340-00	28
A/R		THERMAL COMPOUND	9008268	81	1	J2	CONN. 9 PIN MATE-N-LOC	1209350-09	29
3		SILPAD TO 3	1213071-02	82	17		PINS	1209456-01	30
6		NUT, KEP #4/40	9006557	83	2	(Q18),(Q17)	HEAT SINK	1210001	31
A/R		WIRE #20 AWG STRANDED	9107460-66	84	4	R2,R37,R47,R50	RESISTOR, 33, 1/4W, 5%	1300197	32
1	J3	CONTROL CABLE	7011414-DD	85	2	R12,R14	RESISTOR, 68, 1/4W, 5%	1300219	33
~~2~~	~~WASHER, LOCK, INTERNAL TOOTH #4~~	~~9006833~~	~~86~~	8	R6,R27,R35,R39,R48,R49,R63, R64	RESISTOR, 100, 1/4W, 5%	1300229	34
10		WASHER, FLAT	9008172	87					
3		WASHER, FLAT	9006666	88	2	R9,R44	RESISTOR, 100, 1W, 5%	1300232	35
3		SILPAD, STUD MOUNT	1213071-05	89	1	.R52	RESISTOR, 390, 1/4W, 5%	1300309	36
3		BUSHING, NYLON	9008440	90	7	R19,R20,R54,R59,R60,R62,R25	RESISTOR, 1K, 1/4W, 5%	1300365	37
3		NUT, HEX #10-32	9006565	91	1	R45	RESISTOR, 1.5K, 1/4W, 5%	1300391	38
					1	R29	RESISTOR, 2.49K, 3/4W, 1%	1300424	39
AR	W1,W2	WIRE, #20 AWG. SOLID	9107560-02	93	3	R11,R43,R61	RESISTOR, 2.7K, 1/4W, 5%	1300426	40
1		LABEL, POWER SUPPLY	9009255-00	94	2	R7,R65	RESISTOR, 4.7K, 1/4W, 5%	1300447	41
2		TIE, CABLE	9007031	95	2	R23,R56	RESISTOR, 5.62K, 1/4W, 1%	1305128	42
2	C1,C15	CAPACITOR, .02UF, 100V, DISC.	1000004	96	11	R13,R15,R16,R17,R21,R22,R42 R46,R51,R57,R58	RESISTOR, 10K, 1/4W, 5%	1300479	43
1	R3	RESISTOR, 56, 1/4W, 5%	1302602	97					
1	R33	RESISTOR, 2.49K, 1/4W. 1%	1312626	98	2	R53,R24	RESISTOR, 100K, 1/4W, 5%	1302466	44
1	R38	RESISTOR, .10Ω, 2W, 10%	1316012	99	3	R8,R31,R40	RESISTOR, 10, 1/4W. 5%	1301317	45
					2	R10,R41	RESISTOR, 330, 2W, 10%	1301961	46
					2	R26,R34	RESISTOR, 2K, 1/4W, 5%	1302388	47
					1	R66	RESISTOR, 180, 1/4W, 5%	1301322	48
					1	R4	RESISTOR, 1.2K, 1W, 10%	1302950	49
					.1	R30	RESISTOR, 1.8K, 1W, 5%	1303122	50
QTY	REF. DESIGNATION	DESCRIPTION	PART NO.	ITEM NO.	QTY	REF. DESIGNATION	DESCRIPTION	PART NO.	ITEM NO.

ALTERNATE PARTS LIST

1		EYELET	9006732	76
7	C3,C12,C18,C27,C28,C32,C33	CAPACITOR .01 MF 50V	1001610-00	9
QTY	REF. DESIGNATION	DESCRIPTION	PART NO.	ITEM NO.

FIRST USED ON OPTION MODEL

PARTS LIST

ETCH BOARD REV. E

IC TYPE	GND	+5V

GND AND 5V ARE USUALLY PIN 7 AND 14 RESPECTIVELY EXCEPTIONS ARE STATED ABOVE

IC PIN LOCATIONS

REV.	CHANGE NO.	REVISIONS
	5411601-00001	E
	5411601-00002	F
	5411601-00003	H
	5411601-00004	J
	5411601-00005	K
	5411601-00006	L
	5411601-00007	M
	5411601-00008	N

DEC NO.	EIA NO.	DEC NO.	EIA NO.

SEMICONDUCTOR CONVERSION CHART

DRN. B. Lodge DATE 5-28-75
CHKD. DATE
ENG. DATE 7/22/75
PROJ. ENG. DATE 7/22/75
PROD. DATE 10/8/75
NEXT HIGHER ASSY
SCALE
SHEET 1 OF 3

digital

TITLE MOS REGULATOR H777

SIZE	CODE	NUMBER	REV.
D	CS	5411601-0-1	N

DIST.

"THIS DRAWING AND SPECIFICATIONS, HEREIN, ARE THE PROPERTY OF DIGITAL EQUIPMENT CORPORATION AND SHALL NOT BE REPRODUCED OR COPIED OR USED IN WHOLE OR IN PART AS THE BASIS FOR THE MANUFACTURE OR SALE OF ITEMS WITHOUT WRITTEN PERMISSION.
COPYRIGHT © 1975 DIGITAL EQUIPMENT CORPORATION"

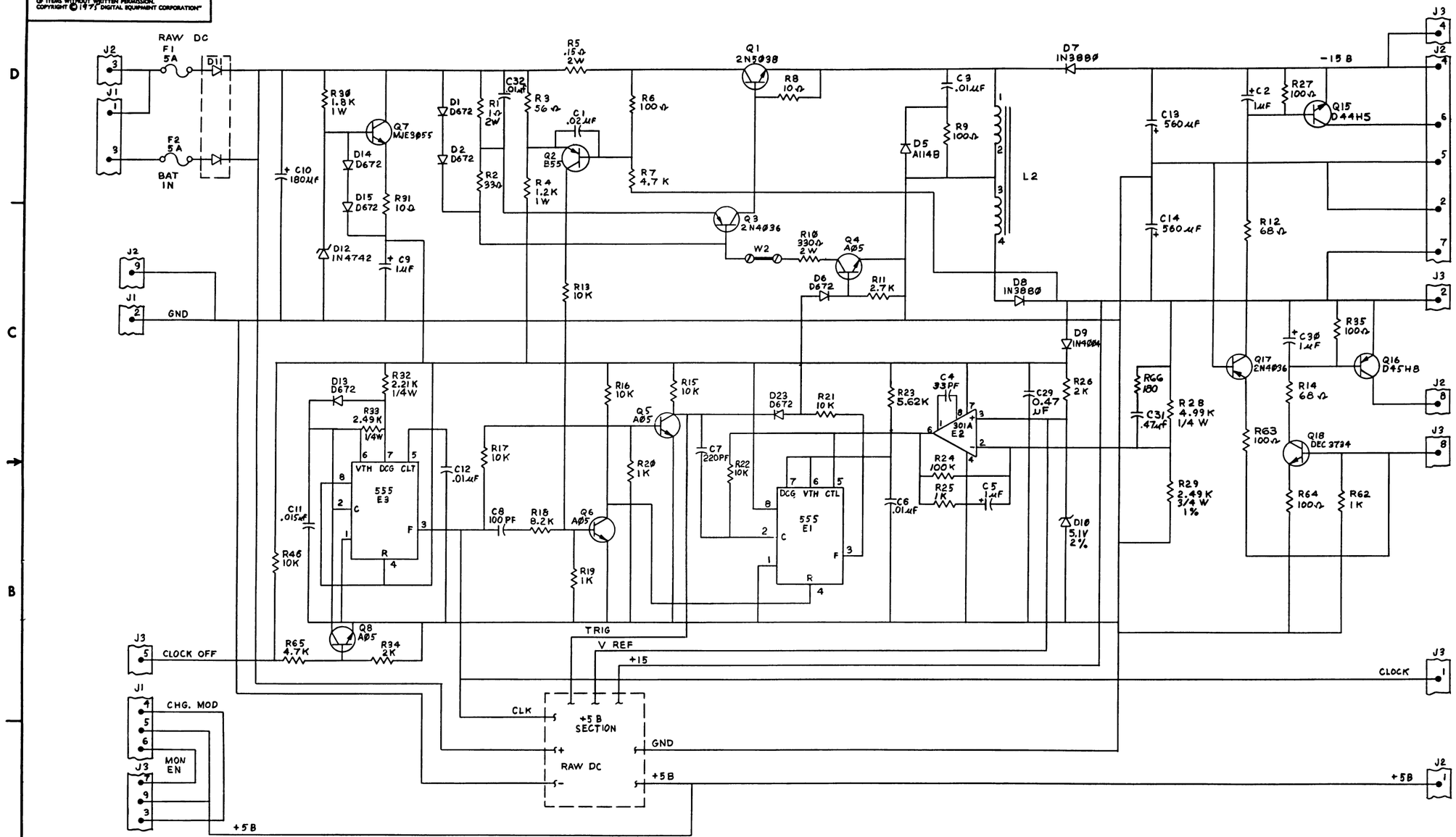

REVISIONS		
CHK	CHANGE NO	REV

TITLE	SIZE	CODE	NUMBER	REV.
MOS REGULATOR H777	D	CS	5411601-0-1	N
SCALE — SHEET 2 OF 3	DIST.			

DEC FORM NO. ORD 138

"THIS DRAWING AND SPECIFICATIONS, HEREIN, ARE THE PROPERTY OF DIGITAL EQUIPMENT CORPORATION AND SHALL NOT BE REPRODUCED OR COPIED OR USED IN WHOLE OR IN PART AS THE BASIS FOR THE MANUFACTURE OR SALE OF ITEMS WITHOUT WRITTEN PERMISSION
COPYRIGHT © 1975 DIGITAL EQUIPMENT CORPORATION"

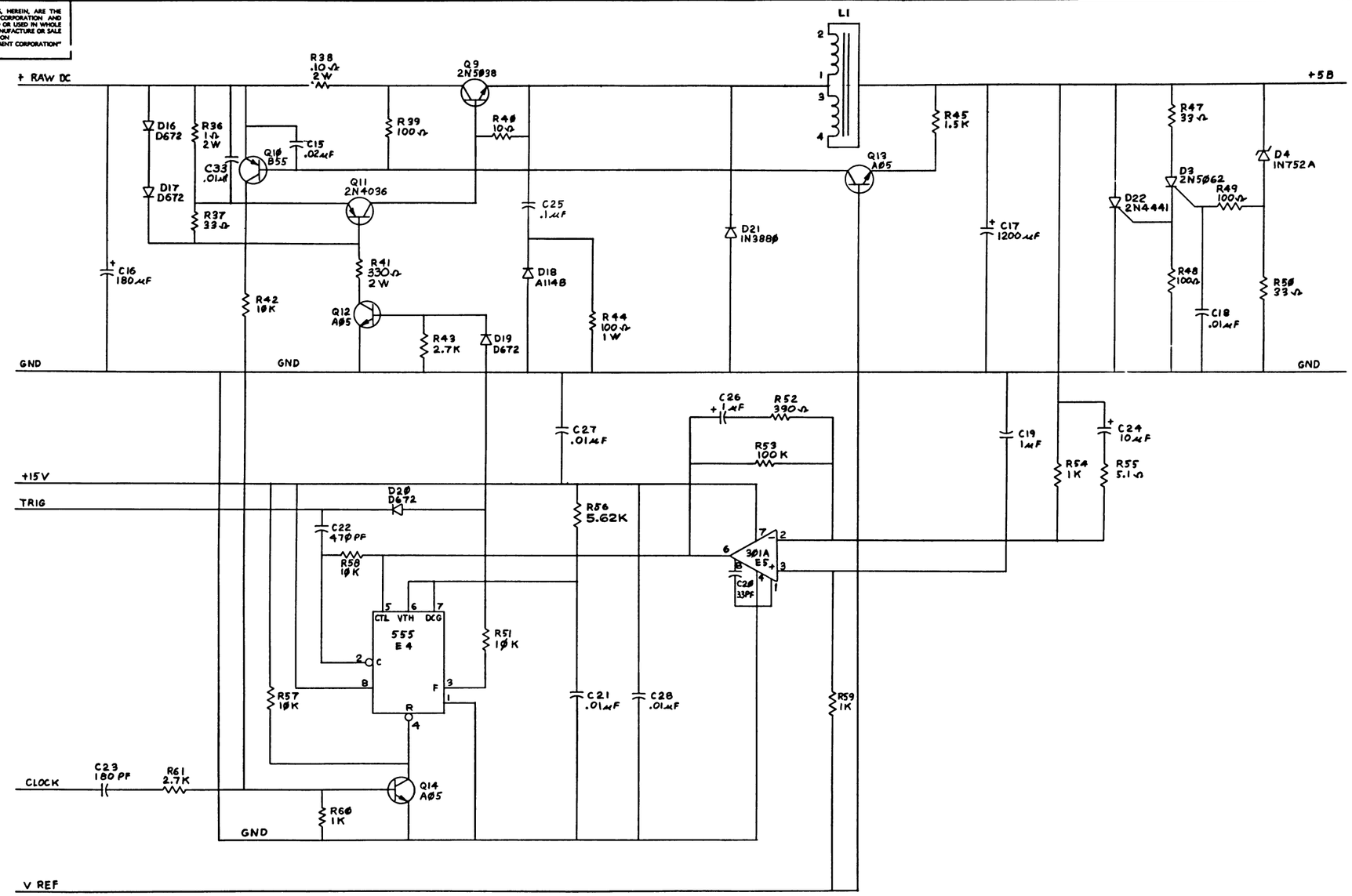

REVISIONS		
CHK	CHANGE NO	REV

TITLE	SIZE	CODE	NUMBER	REV
MOS REGULATOR H777	D	CS	5411601-0-1	N
SCALE	SHEET 3 OF 3	DIST.		

DEC FORM NO. 138

THE INFORMATION CONTAINED HERE IS THE PROPRIETARY PROPERTY OF DIGITAL EQUIPMENT CORPORATION. COPYING OR OTHER REPRODUCTION IS PROHIBITED WITHOUT THE PRIOR WRITTEN CONSENT OF DIGITAL EQUIPMENT CORPORATION.

NOTES:

USE TRANSIPAD DEC# 9007201 UNDER Q1 & Q8

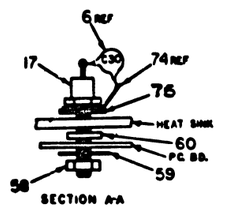

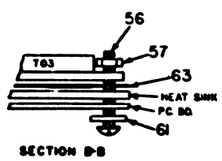

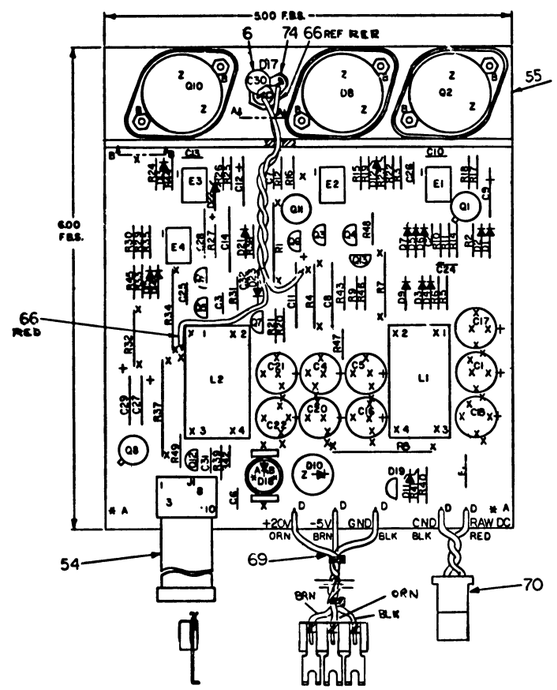

IC TYPE	GND	+5V

GND AND 5V ARE USUALLY PIN 7 AND 14 RESPECTIVELY EXCEPTIONS ARE STATED ABOVE

IC PIN LOCATIONS

QTY	REF. DESIGNATION	DESCRIPTION	PART NO.	ITEM NO.
1		HEAT SINK	7416236-0-0	55
6		SCREW, #4-40 x 1/2 lg PH HD	9008013-1	56
6		NUT, KEP #4-40	9008557	57
1		NUT, HEX #10-32	9008584	58
1		WASHER, FLAT	9008662	59
1		BUSHING, NYLON	9008440	60
8		WASHER FLAT	9008172	61
A/R		COMPOUND, THERMAL	9008268	62
3		INSULATOR, TO 3	1213071-02	63
~~1~~		~~WASHER, THERMAFILM~~	~~9008434~~	~~64~~
2		TRANSIPAD	9007201	65
A/R		WIRE #18 AWG, TWISTED PAIR	9107430-02	66
1	C29	CAPACITOR 2.2UF 20V	1002627	67
1	R47	RESISTOR 200, 1/4W, 5%	1311522	68
1		HARNESS (THREE WIRE)	C-IA 7012547-0-0	69
1		HARNESS (TWO WIRE)	C-IA 7012546-0-0	70
1	C12	CAPACITOR, 10µf, 20V, 10%, TANT	1004813	71
1	DZ3	DIODE, IN753A	1102421	72
1	C26	CAPACITOR, .47µf, 25V, 20%, CER	1010273	73
1		SOLDER, TERM, SCREW MTG.	9007815	74
1		SIL PAD .800 .190 I.D.	1213071-05	75
1	C32	CAP. 1UF 50V CER.	1010274-02	76

QTY	REF. DESIGNATION	DESCRIPTION	PART NO.	ITEM NO.
REF		X-Y COORDINATE HOLE LOCATION	K-CO-5411599-0-4	1
REF		ASSY/DRILLING HOLE LAYOUT	D-AH-5411599-0-5	2
REF		MODULE ECO HISTORY	B-MH-5411599-0-0	3
1		ETCHED CIRCUIT BOARD	5011598	4
1	C7	CAPACITOR, 100RF, 100V, 5%,	1000016	5
6	C2,C3,C6,C30,C24,C25	CAPACITOR, 01uf, 100V DISC	1001610-01	6
3	C9, C27, C28	CAPACITOR, 1uf, 35V, 10% TANT	1001776	7
2	C10,C13	CAPACITOR, 33pf, 100V DM	1000009	8
1	C11	CAPACITOR, 1.5µf, 35V, 10% TANT	1009725	9
2	C8,C14	CAPACITOR, 01uf, 100V, 10% MYLAR	1005784	10
1	C31	CAPACITOR, 220pf, 100V, 5%	1000021	11
2	C5,C16	CAPACITOR, 1200uf, 63V	1012807-01	12
7	C1,C17,C18,C4,C20,C21,C22	CAPACITOR, 160uf, 50V	1012807-02	13
1	D22	DIODE, IN4742	1109502	14
1	D10	DIODE, MR1033B	1103341	15
10	D1 THRU D7, D14,D15, D21	DIODE, D872	1105275	16
1	D17	DIODE, IN3880	1109440	17
2	D12,D13	DIODE, IN751, 5.1V 2%	1110713	18
1	D8	DIODE	1110715	19
1	D11	DIODE, IN978B	1110856	20
1	D19	DIODE, 2N5962	1110968	21
1	D9,	DIODE, A114B	1112595-01	22
1	F1	FUSE, 15A, PICO	1210929	23
1	R46	RESISTOR, 18K, 1/4W, 5%	1302465	24
6	R9,R39,R40,R41,R43,R49	RESISTOR, 100, 1/4W, 5%	1300229	25
1	R7	RESISTOR, 100, 1W, 5%	1300232	26
3	R11, ,R2,R33	RESISTOR, 390, 1/4W, 5%	1300309	27
6	R6,R12,R23,R31,R17,R48	RESISTOR, 1K, 1/4W, 5%	1300365	28
3	R10, ,R14, ,R30	RESISTOR, 2 7K, 1/4W, 5%	1300426	29
4	R42,R44, R15,R27	RESISTOR, 4 7K, 1/4W, 5%	1300447	30
1	R4	RESISTOR 1K, 1W, 5%	1300368	31
3	R16, R29,R38,	RESISTOR, 10K, 1/4W, 5%	1300479	32
2	R3,R35	RESISTOR, 10, 1/4W, 5%	1301317	33
1	,R45	RESISTOR, 470, 1/4W, 5%	1300316	34
1	R5	RESISTOR, 27, 1/4W, 5%	1301522	35
1	,R34	RESISTOR, 330, 2W, 10%	1301961	36
1	R19	RESISTOR, 2K, 1/4W, 5%	1302388	37
2	R18,R26	RESISTOR, 100K, 1/4W, 5%	1302466	38
1	R22	RESISTOR, 2.74K, 1/4W, 1%	1304868	39
2	R1,R32	RESISTOR, 1, 2W, 5% WW	1305428	40
2	R24, R25	RESISTOR, 1 5K, 1/4W 5%	1300391	41
1	R21	RESISTOR, 8 25K, 1/4W, 1%	1309420	42
2	R8,R37	RESISTOR, 08, 5W, 3% WW	1311803	43
1	R20	RESISTOR, 56, 1/4 W, 5%	1302602	44
2	Q1,Q8	TRANSISTOR, 2N4898	1509700	45
7	Q3,Q5,Q6,Q7,Q9,Q12,Q13	TRANSISTOR, XA85	1510705	46
1	Q4	TRANSISTOR, XA55	1510706	47
1	Q18	TRANSISTOR, C32AX135	1510928	48
2	Q2,Q10	TRANSISTOR, 2N5038	1510969	49
1	Q11	TRANSISTOR, 2N5433	1511886	50
2	L1,L2	INDUCTOR, 500uh	1812593	51
2	E1,E3	I.C DEC 301A	1910282	52
2	E2,E4	I C DEC 555	1911944	53
1	J1	CABLE ASSY	7011414 -0E	54

FIRST USED ON OPTION MODEL

PARTS LIST

ETCH BOARD REV. D

REV.	CHANGE NO.	CHK
J	5411599-00003	
H	5411599-00002	
F	5411599-00001	

REVISIONS

J SCFIO 2-9-77 — B. COURTEMANCHE 11 Nov 77 — 6 AUG 76 — G. POTTER

DEC NO.	EIA NO.	DEC NO.	EIA NO.

SEMICONDUCTOR CONVERSION CHART

DRN. DATE 11/17/77
CHK'D DATE
ENG. DATE
PROJ. DATE
PROD. DATE

NEXT HIGHER ASSY E-UA-H777-0-0

SCALE
SHEET 1 OF 2

digital

TITLE +20V REGULATOR/H777

SIZE	CODE	NUMBER	REV.
D	CS	5411599-0-1	J

DIST.

THIS DRAWING AND SPECIFICATION, SIGNAL OR TRANSMITTED SIGNAL IS THE PROPERTY OF GENERAL ELECTRIC COMPANY AND SHALL NOT BE REPRODUCED OR COPIED OR USED IN WHOLE OR IN PART WITHOUT WRITTEN PERMISSION OF GENERAL ELECTRIC COMPANY. (C) 1972, GENERAL ELECTRIC COMPANY

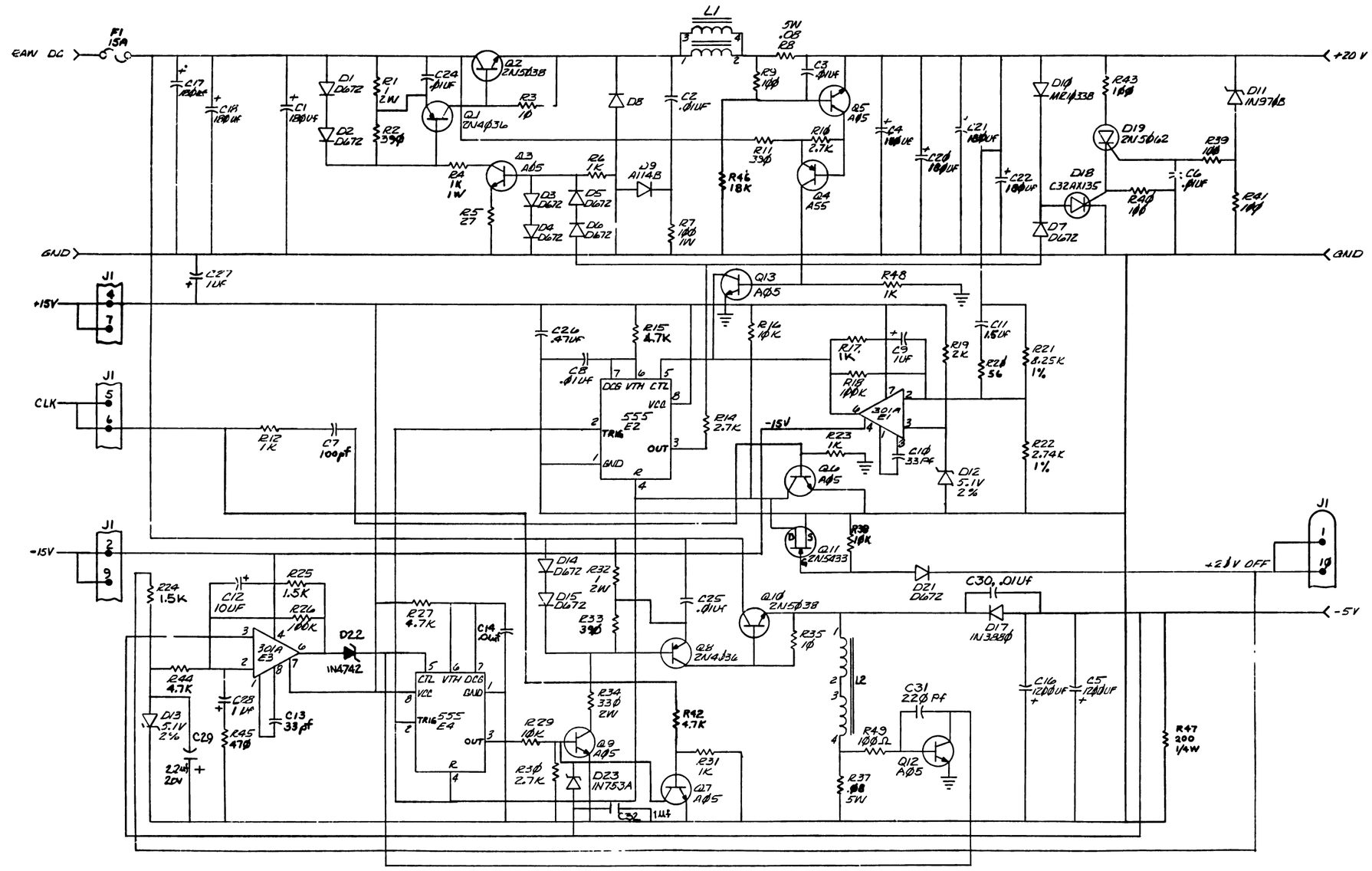

REVISIONS		
CHK	CHANGE NO.	REV.

TITLE	SIZE	CODE	NUMBER	REV.
+20V REGULATOR/H777	D	CS	5411599-0-1	
SCALE —	SHEET 2 OF 2	DIST.		

"THIS DRAWING AND SPECIFICATIONS, HERein, ARE THE PROPERTY OF DIGITAL EQUIPMENT CORPORATION AND SHALL NOT BE REPRODUCED OR COPIED OR USED IN WHOLE OR IN PART AS THE BASIS FOR THE MANUFACTURE OR SALE OF ITEMS WITHOUT WRITTEN PERMISSION. COPYRIGHT © 1974, DIGITAL EQUIPMENT CORPORATION"

FOR MFG USE ONLY

LEGEND	
NUMBER	VARIATION
BA11-KE	120 V 50/60 HZ
BA11-KF	240 V 50/60 HZ
BA11-KH *	120 V 50/60 HZ
BA11-KJ *	240 V 50/60 HZ
BA11-KK *	120 V 50/60 HZ
BA11-KL *	240 V 50/60 HZ
BA11-KA *	NO POWER SUPPLY
BA11-KS *	100 VAC 50/60 HZ
BA11-KT *	240 VAC 50/60 HZ

NOTES:
1. CAUTION: OFF SHEEET PARTS LISTS EXISTS SEE A-PL-BA11-K-Ø
2. GROUND LUG OF PWR DISTRIBUTION BD. ATTACHES TO GND STANDOFF ON CHASSIS.
3. TIGHTEN ALL SYSTEM UNIT MOUNTING SCREWS TO 12 IN-LBS WITH A TORQUE SCREW DRIVER
4. ATTACH SHIPPING BRACKETS TO POWER SUPPLY AND BOLT THROUGH HOLE IN CABINET RAILS.
5. INSTALL CARD GUIDES, ITEM NOS 5 & 36 USING TOOL NO. 9412610-2.
6. ASSEMBLE ITEM NO 37 USING EXISTING HARDWARE.
7. REMOVE FOAM STRIPS FROM ITEM #1 AND POSITION ITEM #39 ONTO ITEM #1 PER VIEW E-E.
8. SYMMETRICALLY LOCATE ITEM #40 ONTO ITEM #1.

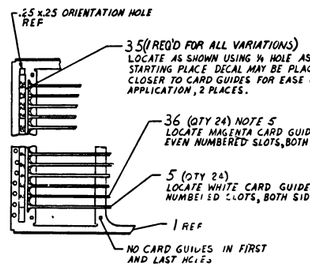

VIEW A-A
SCALE: NONE

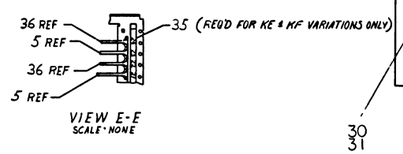

VIEW E-E
SCALE: NONE

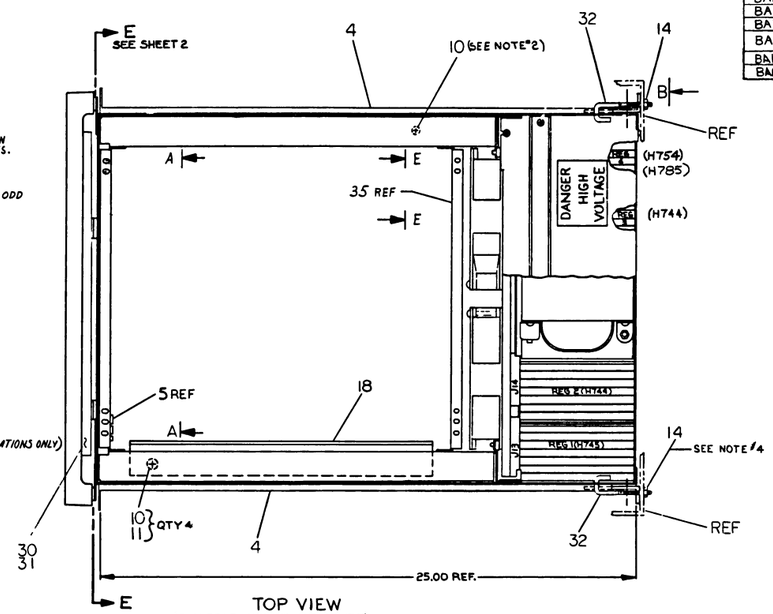

TOP VIEW
(CHASSIS COVER REMOVED)

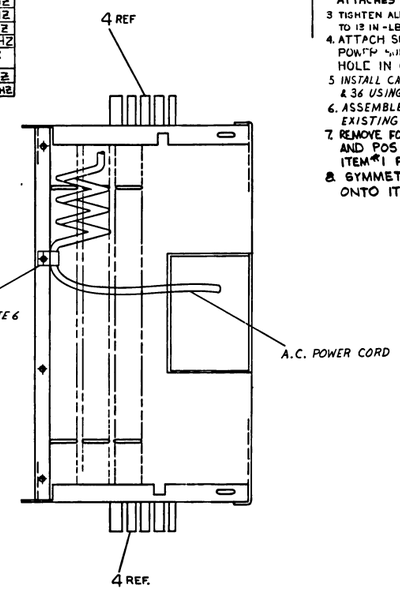

VIEW B-B

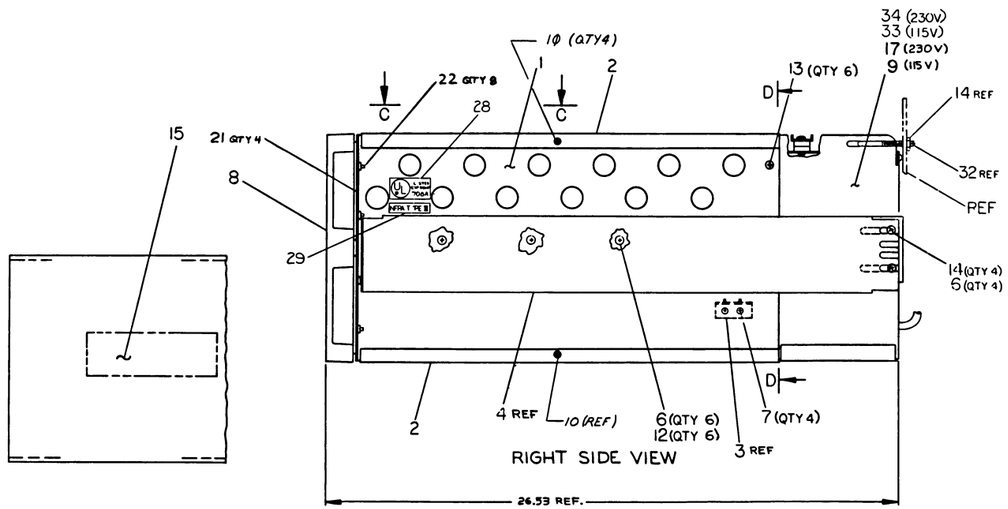

RIGHT SIDE VIEW

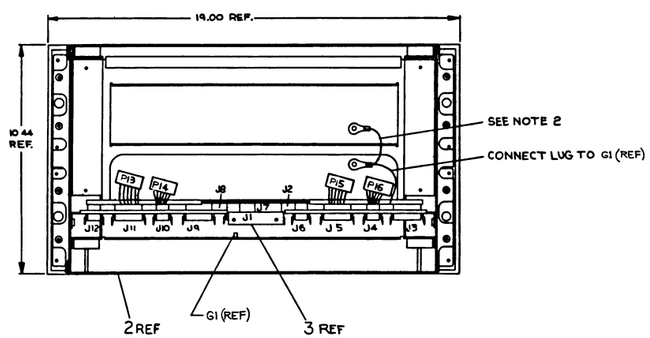

VIEW D-D
REAR VIEW
(POWER SUPPLY AND CHASSIS SLIDES REMOVED)

VIEW C-C
SCALE: NONE
ONLY TOP COVER ITEM #2 SHOWN

FIRST USED ON OPTION/MODEL	QTY	DESCRIPTION	PART NO	ITEM NO
BA11-K		PARTS LIST		

DIMENSIONAL TOLERANCE
DIMENSIONS ARE INCHES UNLESS OTHERWISE SPECIFIED

UNLESS OTHERWISE SPECIFIED	INCHES	ANGLES
X.XX ±0.06	.XXX ±0.005	60' 30'
X.XXX ±0.015	.XXX ±0.005	
X ±1		

THIRD ANGLE PROJECTION
REMOVE BURRS AND BREAK SHARP CORNERS SURFACE QUALITY ✓
MATERIAL
FINISH
NEXT HIGHER ASSY. B-DD-BA11-K
SCALE 1/2
SHEET 1 OF 1

DRAWN Carl McCoy DATE 2-21-74
CHECKED Bill Hasely DATE 2/11/74
ENGR. Ken Lindenberg DATE 2-21-74
PROJECT MGR. Wm. Cameron DATE 2-21-74
PRODUCT MGR. Paul Thomas DATE

digital

TITLE UNIT ASS'Y BA11-K

SIZE E CODE UA NUMBER BA11-K-Ø REV. P
DIST.

REVISIONS			
E	E. Roman 1 Dec 72		
D	E. ROMANOWSKI 30 Nov 73		
C	BA11-K0017 27 Feb 74		
B	YU CHUAN LEE/B. HALL 3-11-74		
A	BA11-K0016		
N	B. CRAMM 21 NOV 77		
M	BA11-K0015		
L	BA11-K0014		
K	B. CORTEMANCHE 28 DEC 76		
J	BA11-K0013		
H	BA11-K0012		
G	BA11-K0011		
F	BA11-K0010		
E	B. MINOR 11/15/82		
D	BA11-K0009		
C	BA11-K0008		
B	BA11-K0007		
A	BA11-K0004		
REV	CHANGE NO.		

"THIS DRAWING AND SPECIFICATION, HEREIN, ARE THE PROPERTY OF DIGITAL EQUIPMENT CORPORATION AND SHALL NOT BE REPRODUCED OR COPIED OR USED IN WHOLE OR IN PART AS THE BASIS FOR THE MANUFACTURE OR SALE OF ITEMS WITHOUT WRITTEN PERMISSION. COPYRIGHT © , DIGITAL EQUIPMENT CORPORATION"

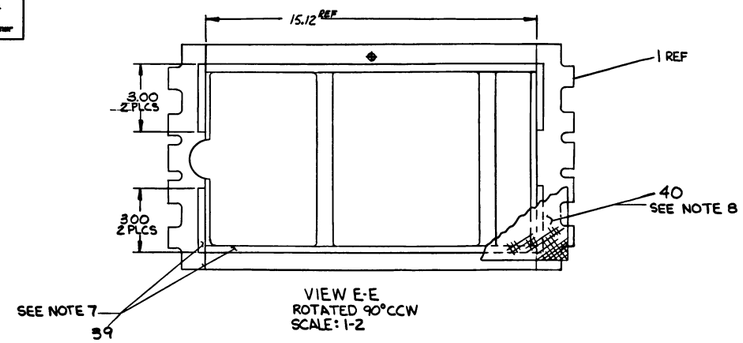

VIEW E-E
ROTATED 90°CCW
SCALE: 1-2

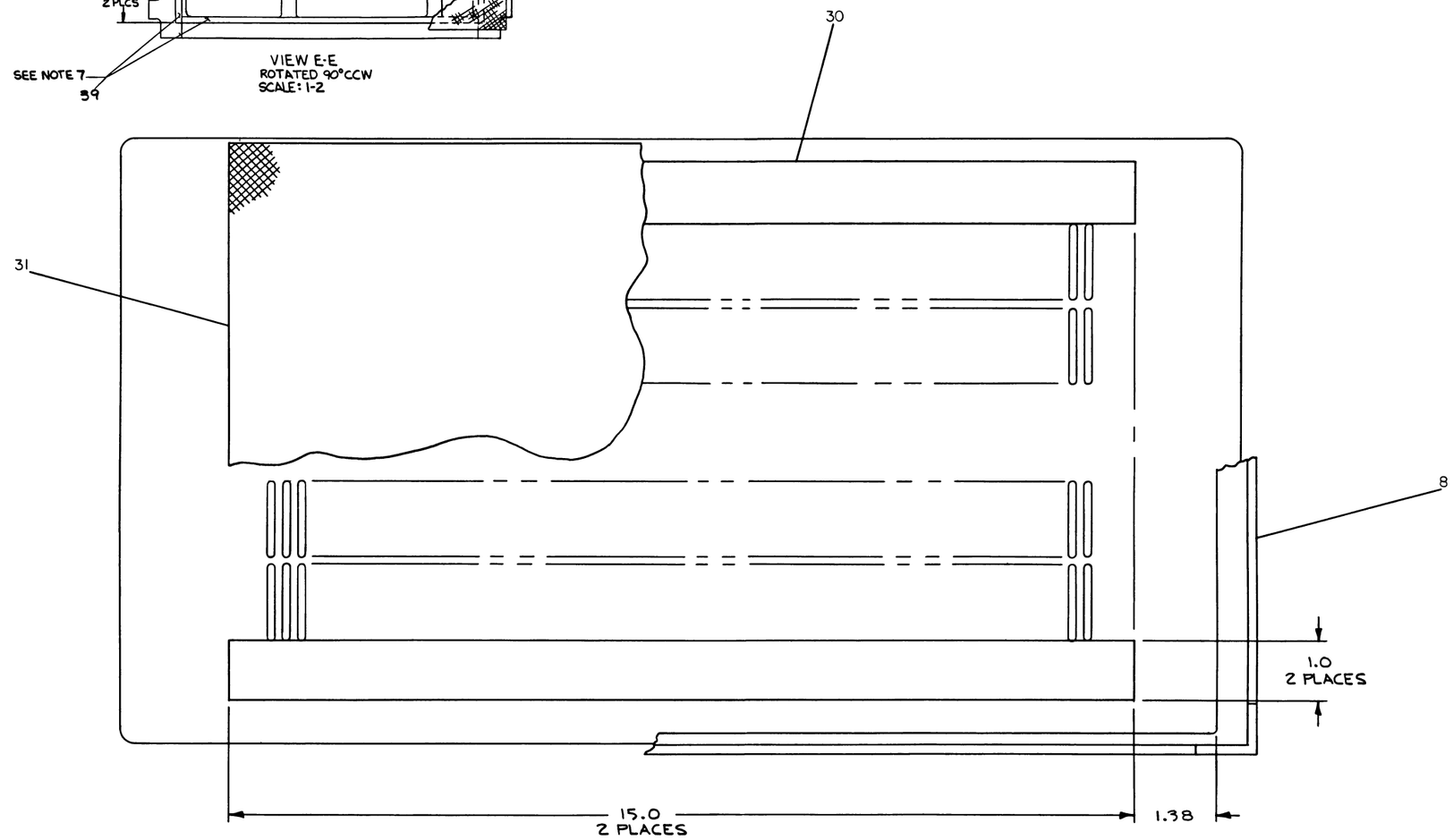

REAR VIEW

REVISIONS		
CHK	CHANGE NO.	REV

TITLE	SIZE	CODE	NUMBER	REV
UNIT ASSY BA11-K-Ø	E	UA	BA11-KØ	P
SCALE — // —	SHEET 2 OF 2	DIST		

DIGITAL EQUIPMENT CORPORATION
MAYNARD, MASSACHUSETTS
PARTS LIST

MADE BY BILL BLODGET DATE 6/26/74	CHECKED D. HEALY DATE 6/27/74	SECTION 1
ENG P. E. JANSON DATE 8-23-74	PROD W. LUCAS DATE 8-23-74	ISSUED SECT. 1

ITEM NO.	DWG NO./PART NO.	DESCRIPTION	QUANTITY/VARIATION BA11-KE	BA11-KF	BA11-KH	BA11-KJ	BA11-KK	BA11-KL	BA11-KA	BA11-KS	BA11-KT			
23	A-SP-3700167-0-0	IN PLANT PACK. INST.	REF	REF	REF	REF	REF	REF	REF	REF	REF			
24	A-SP-3700165-0-0	SKID LOAD PACK INST.	REF	REF	REF	REF	REF	REF	REF	REF	REF			
25	A-SP-3700169-0-0	CUST. CUSHIONED PACK. INST.	REF	REF	REF	REF	REF	REF	REF	REF	REF			
26	A-SP-BA11-K-6	BA11-K BASIC CHECKOUT AND ACCEPTANCE												
		PROCEDURE	REF	REF	REF	REF	REF	REF	REF	REF	REF			
27	A-SP-BA11-K-7	BA11-K BASIC ASSEMBLY PROCEDURE	REF	REF	REF	REF	REF	REF	REF	REF	REF			
28	A-DC-5309414-0	DECAL, UL	1	1	-	-	-	-	-	1	1			
29	A-DC-5309413-0	DECAL, NFPA	1	1	-	-	-	-	-	1	1			
30	1211336-02	TAPE	A/R	A/R	-	-	-	-	-	-	-			
31	1211255-0-0	PRE FILTER	1	1	-	-	-	-	-	-	-			
32	C-MD-7413659-0-0	SHIPPING BRACKET	2	2	-	-	-	-	-	2	2			
33	B-DD-H765-C	POWER SUPPLY H765-C 120VAC 50/60 HZ NO H754	-	-	-	-	1	-	-	-	-			
34	B-DD-H765-D	POWER SUPPLY H765-D 240VAC 50/60 HZ NO H754	-	-	-	-	-	1	-	-	-			
35	A-PS-3613281-00	DECAL, ADHESIVE BACKED, BA11-K	2	2	1	1	1	1	1	2	2			
36	D-PS-1212405-1	CARD GUIDE, SINGLE	24	24	24	24	24	24	24	24	24			
37	9007086-00	CLAMP, CABLE	1	1	1	1	1	1	-	1	1			
38	D-PS-1211825-01	SLIDE, 3 POS. TILT	-	-	-	-	-	-	-	1 pr	1 pr			
39	A-PS-1212431-00	TAPE, HOOK, MOLDED	-	-	-	-	-	-	-	A/R	A/R			
40	A-PS-1212392-01	FILTER, FOAM	-	-	-	-	-	-	-	1	1			

TITLE	ASSY NO.	SIZE	CODE	NUMBER	REV.	ECO NO
UNIT ASSY BA11-K	E-UA-BA11-K-0	A	PL	BA11-K-0	P	
	SHEET 2 OF 2	DIST.				

DEC FORM DRA 110 DEC 16-(325)-1031-N870

DIGITAL EQUIPMENT CORPORATION
MAYNARD, MASSACHUSETTS
PARTS LIST

MADE BY BILL BLODGET DATE 6/26/74	CHECKED D. HEALY DATE 6/27/74	SECTION 1
ENG P. E. Janson DATE 8-23-74	PROD W. Lucas DATE 8/23/74	ISSUED SECT. 1

ITEM NO.	DWG NO./PART NO.	DESCRIPTION	QUANTITY/VARIATION BA11-KE	BA11-KF	BA11-KH	BA11-KJ	BA11-KK	BA11-KL	BA11-KA	BA11-KS	BA11-KT			
1	E-IA-7009769-0-0	CHASSIS 10.5	1	1	1	1	1	1	1	1	1			
2	D-IA-7009768-0-0	COVER, CHASSIS	2	2	-	-	-	-	-	2	2			
3	D-CS-5410864-0-1	POWER DISTRIBUTION BOARD	REF	REF	REF	REF	REF	REF	-	REF	REF			
4	D-PS-1211825-0-0	SLIDE, 3 POS TILT	1pr	1pr	-	-	-	-	-	-	-			
5	D-PS-1212405-0	CARD GUIDE, SINGLE	24	24	24	24	24	24	24	24	24			
6	9006071-3	SCREW, PHL TRUSS HD #10-32 X .38	10	10	-	-	-	-	-	10	10			
7	9006020-2	SCREW, PHL FLAT HD #6-32 X .25	4	4	4	4	4	4	-	4	4			
8	D-IA-7411013-0-0	COVER, PANEL 10 1/2 BEZEL (SNAP-ON VENTED)	1	1	-	-	-	-	-	-	-			
9	B-DD-H765-A	POWER SUPPLY H765-A 120V 50/60 HZ	1	-	1	-	-	-	-	1	-			
10	9006020-3	SCREW, PHL. TRUSS HD #6-32 X .25	9	9	5	5	5	5	5	9	9			
~~11~~	~~9006633~~	~~WASHER INTERNAL TOOTH LOCK #6~~	~~4~~	~~4~~	~~4~~	~~4~~	-	-		-	-			
12	9007651	WASHER EXTERNAL TOOTH #10	6	6	-	-	-	-	-	6	6			
13	9009599	SCREW, PHL FLAT HD (SPECIAL)	6	6	6	6	6	6	-	6	6			
14	9006565	NUT, KEPS, #10-32	6	6	-	-	-	-	-	6	6			
15	DEC-3-(374)-1825-N1174	STICKER, "CONFIGURATION"	1	1	-	-	-	-	-	1	1			
~~16~~	~~D-IA-7010059-0-0~~	~~SHIPPING BRKT, ASSY~~	~~1~~	~~1~~	-	-	-	-		-	-			
17	B-DD-H765-B	POWER SUPPLY H765-B, 240V 50/60 HZ	-	1	-	1	-	-	-	-	1			
18	D-MD-7412184-0-0	CABLE TROUGH CHASSIS	-	-	1	1	1	1	1	-	-			
~~19~~	~~9008408-1~~	~~SCR, PH, HD SELF TAP #6-32 X .25~~	~~1~~	~~1~~	~~5~~	~~5~~	-	-	-	-	-			
20	D-UA-BC11A-10-0	UNIBUS CABLE, 10 FT	1	1	-	-	-	-	-	1	1			
21	1209224	LATCH MOLDING	4	4	-	-	-	-	-	-	-			
22	9008007-2	SCR PH HD FLT #10-32 X .25	8	8	-	-	-	-	-	-	-			

TITLE	ASSY NO.	SIZE	CODE	NUMBER	REV.	ECO NO.
UNIT ASSY BA11-K	E-UA-BA11-K-0	A	PL	BA11-K-0	P	BA11 K-00017
	SHEET 1 OF 2	DIST.				

DEC FORM DRA 110 DEC 16-(325)-1031-N870

digital EQUIPMENT CORPORATION MAYNARD MASSACHUSETTS

DRAWING DIRECTORY

"THIS DRAWING AND SPECIFICATIONS, HEREIN, ARE THE PROPERTY OF DIGITAL EQUIPMENT CORPORATION AND SHALL NOT BE REPRODUCED OR COPIED OR USED IN WHOLE OR IN PART AS THE BASIS FOR THE MANUFACTURE OR SALE OF ITEMS WITHOUT WRITTEN PERMISSION. COPYRIGHT © 1974 , DIGITAL EQUIPMENT CORPORATION"

CUSTOMER PRINT SET INDEX

SEQUENCE	
DRAWING DIRECTORY BA11-K	B-DD-BA11-K
UNIT ASSY BA11-K	E-UA-BA11-K-Ø
UNIT ASSY BA11-K P.L.	A-PL-BA11-K-Ø
DRAWING DIRECTORY H765	B-DD-H765-Ø
UNIT ASSY BC11A	D-UA-BC11A-1Ø-Ø
BC11A UNIBUS CABLE, M919	B-CS-M919-0-1
BC11A UNIBUS CABLE, M929	B-CS-M929-0-1

SEQUENCE	
MFG. PRINT SET	
IN PLANT PACK. INST.	A-SP-3700167-0-0
SKID LOAD PACK. INST.	A-SP-3700165-0-0
CUST. CUSHIONED PACK. INST.	A-SP-3700169-0-0

THIS IS PRINT SET

UNIT VARIATIONS

VAR	TITLE	PRINT SET 1			
BA11-KE	120 VAC 50/60 HZ	X			
BA11-KF	240 VAC 50/60 HZ	X			
BA11-KH	120 VAC 50/60 HZ (MANUF. ONLY)	X			
BA11-KJ	240 VAC 50/60 HZ (MANUF. ONLY)	X			
BA11-KK	120 VAC 50/60 HZ (NO H754) (MANUF ONLY)	X			
BA11-KL	240 VAC 50/60 HZ (NO H754) (MANUF ONLY)	X			
BA11-KA	NO POWER SUPPLY (MANUF ONLY)	X			
BA11-KS	120VAC 50/60 HZ				
BA11-KT	240VAC 50/60 HZ				

REVISIONS			
REV	CHG. NO.	DATE	
A	BA11K-4	E.A.	
E	BA11K-5	E.A.	
C	BA11K-7	WRH	
D	BA11K-8	B.M.	
E	BA11K-9		
F	BA11K-10		
H	BA11K-11		
J	BA11K-12	R.J.P.	
K	BA11K-13		
L	BA11K-14	3-77	
M	BA11K-15	11-77	
N	BA11K-MLI7	11-78	

USED ON OPTION/MODEL	
11/05-S	
11/35-S	
SHEET 1 OF 4	

DRN. J.FERGUSEN	DATE 6/22/74	TITLE DRAWING DIRECTORY BA11-K	
CHK'D. D. HEALY	DATE 7/3/74		
PROJ ENG. E. Anton	DATE 9/4/74		
PROD. RK Peterson	DATE 10/1/74	SIZE B / CODE DD / NUMBER BA11-K	REV N
FIELD SERV. R.L. Gates	DATE 9/13/74	DIST	

DEC 16-(1325)-1062-1A-R972

DRB 106

ML

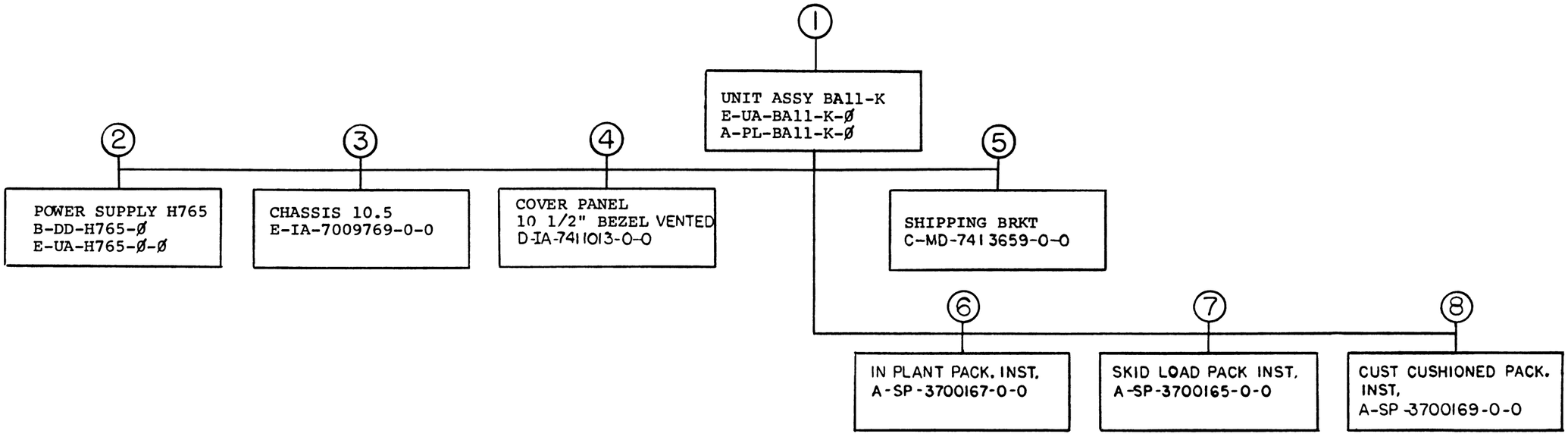

TITLE		SIZE	CODE	NUMBER	REV
DRAWING DIRECTORY BA11-K	SHEET 2 OF 4	B	DD	BA11-K	N

DRB 107
DEC 16-(325)-1062-3-N871

MC

CUSTOMER PRINT SET 1				MFG. SET	ELECTRICAL FIND NO.	DRAWING NO.	REV	NO OF SHT	DESCRIPTION	OPTION NO./FILE DATE
X					1	E-UA-BA11-K-Ø	M	2	UNIT ASSY BA11-K	
X						A-PL-BA11-K-Ø	M	2	UNIT ASSY BA11-K PL	
						A-SP-BA11-K-6		8	BA11-K BASIC CHECKOUT AND	
									ACCEPTANCE PROCEDURE	
						A-SP-BA11-K-7		10	BA11-K BASIC ASSEMBLY PROCEDURE	
C					2	B-DD-H765-Ø	※	5	POWER SUPPLY H765	

CUSTOMER PRINT SET 1				MFG SET	ELECTRICAL FIND NO.	DRAWING NO.	REV	NO OF SHT	DESCRIPTION	OPTION NO./FILE DATE

CUSTOMER PRINT SET CODES	X = PRINT OF DOCUMENT INCLUDED IN PRINT SET C = INCLUDES ALL PRINTS INDICATED ON DOCUMENT S = CONFIDENTIAL AUTHORIZED SIGNATURE REQUIRED	TITLE DRAWING DIRECTORY BA11-K	SHEET 3 OF 4	SIZE B	CODE DD	NUMBER BA11-K	REV N

DRB 108

DEC 16-(325)-1062-2B-R972

CUSTOMER PRINT SET 1	MFG. SET	FIND NO.	DRAWING NO.	REV	NO OF SHT	DESCRIPTION	OPTION NO./FILE DATE
		1	E-UA-BA11-K-Ø	M	2	UNIT ASSY BA11-K	
			A-PL-BA11-K-Ø	M	2	UNIT ASSY BA11-K PL	
			D-IA-7009768-0-0		1	COVER, CHASSIS	
			D-PS-1211825-0-0		3	SLIDE, 3 POS TILT	
			D-MD-7412184-0-0		1	CABLE, TROUGH CHASSIS	
X			D-UA-BC11A-1Ø-Ø		1	UNIBUS, CABLE, 10 FT	
X			B-CS-M919-Ø-1	#	1	BUS CONNECTOR M919	
X			B-CS-M929-0-1	#	1	BUS CONNECTOR M929	
			D-PS-1212405-00		1	CARD GUIDE	
			A-DC-5309414-0		1	DECAL UL	
			A-DC-5309413-0		1	DECAL NFPA	
			A-PS-3613281-0-0		1	DECAL	
		2	B-DD-H765-Ø		5	DWG DIRECTORY H765	
			E-UA-H765-Ø-Ø		2	POWER SUPPLY H765	
		3	E-IA-7009769-0-0		1	CHASSIS, 10.5	
			E-IA-7411703-0-0		1	CHASSIS, FRONT	
			E-IA-7411707-0-0		1	CHASSIS, SIDE	
			D-MD-7411706-0-0		1	BRACKET, HAT	
			D-MD-7411705-0-0		1	BRACKET, CARD GUIDE	
			C-MD-7412185-0-0		1	PLATE CABLE	
		4	D-IA-7411013-0-0		1	COVER PANEL 10 1/2 BEZEL	
		5	C-MD-7413659-0-0		1	SHIPPING BRKT	

CUSTOMER PRINT SET 1	MFG SET	FIND NO.	DRAWING NO.	REV	NO OF SHT	DESCRIPTION	OPTION NO./FILE DATE
	X	6	A-SP-3700167-0-0	-	3	IN PLANT PACK. INST.	
			A-PS-9905650-0-0	-	2	REGULAR SLOTTED CARTON	
			A-PS-9905335-0-0	-	2	BEZEL PROTECTOR	
			A-PS-9905644-0-0	-	2	REAR PROTECTOR	
			A-PS-9905323-0-0	A	2	SIDE PROTECTOR	
			A-PS-9905129-0-0	A	4	POLY BAG 20 x 13 x 40in 1-1/2 mil.	
	X	7	A-SP-3700165-0-0	-	4	SKID LOAD PACK. INST.	
			A-PS-1210568-0-0	-	2	CUSHIONED SKID	
			A-PS-9905445-0-0	-	2	HALF OVERLAP SLOTTED CARTON (TOP)	
			A-PS-9905419-0-0	-	2	FLANGED TUBE (BOTTOM)	
	X	8	A-SP-3700169-0-0	-	2	CUST. CUSHIONED PACK. INST.	
			A-PS-9905645-0-0	-	2	FULL TELESCOPE CAP	
			A-PS-9905642-0-0	-	2	FOAM PAD	
			A-PS-9905643-0-0	-	2	FOAM WITH CORRUGATED SIDE WALL ASSEMBLY	

CUSTOMER PRINT SET CODES
X = PRINT OF DOCUMENT INCLUDED IN PRINT SET
C = INCLUDES ALL PRINTS INDICATED ON DOCUMENT
S = CONFIDENTIAL AUTHORIZED SIGNATURE REQUIRED

TITLE: DRAWING DIRECTORY BA11-K

SHEET 4 OF 4 | SIZE B | CODE DD | NUMBER BA11-K | REV N

DRB 108
DEC 16-(325)-1062-2B-R972

mc

"THE MATERIAL HEREIN IS FOR INFORMATION PURPOSES ONLY AND IS SUBJECT TO CHANGE WITHOUT NOTICE. DIGITAL EQUIPMENT CORPORATION ASSUMES NO RESPONSIBILITY FOR ANY ERRORS WHICH MAY APPEAR HEREIN."

FIELD MAINTENANCE PRINT SET

"THIS DRAWING AND SPECIFICATIONS, HEREIN, ARE THE PROPERTY OF DIGITAL EQUIPMENT CORPORATION AND SHALL NOT BE REPRODUCED OR COPIED OR USED IN WHOLE OR IN PART AS THE BASIS FOR THE MANUFACTURE OR SALE OF ITEMS WITHOUT WRITTEN PERMISSION. COPYRIGHT © 1976 , DIGITAL EQUIPMENT CORPORATION."

TABLE OF CONTENTS

B-TC-7013323-0-1	POWER SUPPLY ASSY (TC)
E-UA-7013323-0-0	POWER SUPPLY ASSY
A-PL-7013323-0-0	POWER SUPPLY ASSY (PL)
B-DD-H765-Ø	H765 DRAWING DIRECTORY (COMPLETE SET)
D-CS-5410864-0-1	POWER DISTRIBUITON BOARD
D-CS-5411086-0-1	POWER LINE MONITOR +15V REGULATOR
MPØØ271	H7441 PRINT SET (COMPLETE SET)
B-DD-H745-Ø	H745 DRAWING DIRECTORY (COMPLETE SET)
B-DD-H754-Ø	H754 DRAWING DIRECTORY (COMPLETE SET)
MPØØ272	H785 PRINT SET (COMPLETE SET)

UNIT VARIATIONS COVERED BY THIS PRINT SET
7013323-0
7013323-1
7013323-2
7013323-3
7013323-4
7013323-5

7013323

Field Maintenance Print Set

Digital Equipment Corporation

PRINT SET ORDER NO.
MPØØ27Ø

REVISIONS		
REV.		
CHG. NO.		
DATE		

USED ON OPTION/MODEL	
1134A	
SHEET I OF 1	

DRN.	D. HEALY	DATE DEC 76
CHK'D	D. HEALY	DATE DEC 76
PROJ. ENG.		DATE 13 JAN 77
FIELD SERV.		DATE 13-JAN-77

digital

TITLE: POWER SUPPLY ASSY

SIZE	CODE	NUMBER	REV.
B	TC	7013323-0-1	

DIST.

EN-01124-16-N676-(327)

DRB 124

BLANK

LEGEND	
NUMBER	VARIATION
7013323-0	120V H765-P, 5411086, 5410864-YA, TWO H7441, H745
7013323-1	120V H765-P, 5411086, 5410864-YA, TWO H7441, H745, H785
7013323-2	120V H765-P, 5411086, 5410864-YA, TWO H7441, H745, H754
7013323-3	240 V H765-R, 5411086, 5410864-YA, TWO H7441, H745
7013323-4	240V H765-R, 5411086, 5410864-YA, TWO H7441, H745, H785
7013323-5	240 V H765-R, 5411086, 5410864-YA, TWO H7441, H745, H754

NOTES

1. REGULATOR #4 IS DETERMINED BY THE VARIATION REQUIRED - SEE LEGEND AND PARTS LIST.
2. GREEN/YELLOW GROUND WIRE FROM TRANSFORMERS TO BE FASTENED UNDER REGULATOR #2 MOUNTING SCREW.
3. CONSOLE CABLE 7011411-2J FROM KY11 LA THIS CABLE IS USED ONLY TO CONNECT THE H785/H7856 BATTERY BACK UP REGULATOR IN REGULATOR SLOT #4.

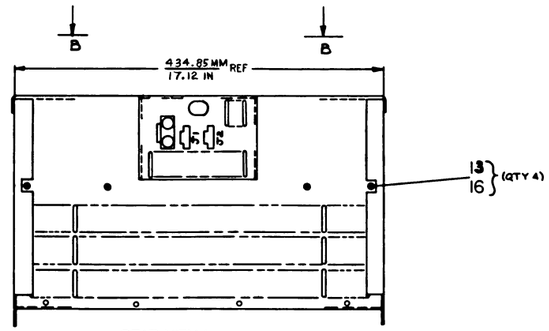

REAR VIEW

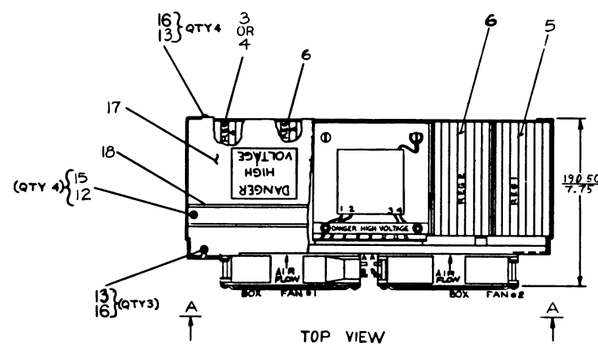

TOP VIEW

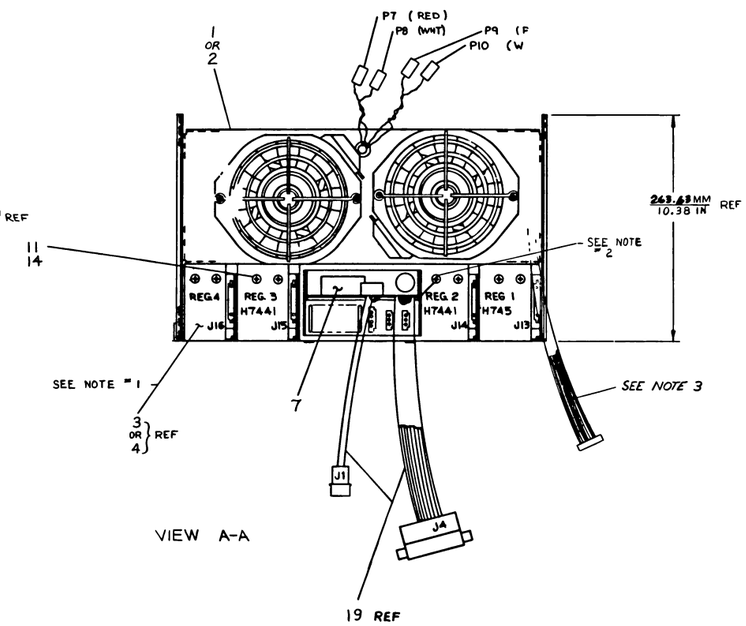

VIEW A-A

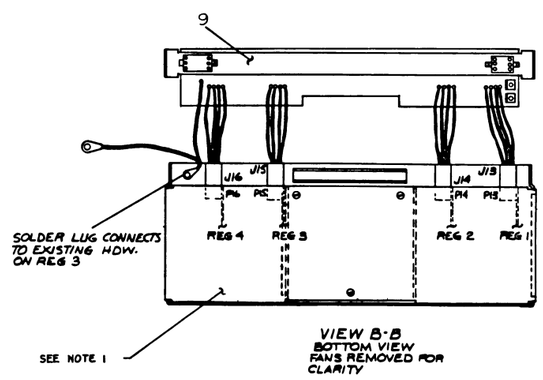

VIEW B-B
BOTTOM VIEW
FANS REMOVED FOR CLARITY

CAUTION: OFF SHEET PARTS LIST EXSISTS
SEE A-PL-7013323-0-0

FIRST USED ON (OPT) KDF11/MODEL	1134A		
DIMENSIONAL TOLERANCE			
SEE PARTS LIST			
NEXT HIGHER ASSY	B-DD-7013323-0		
SCALE	NONE		
SHEET	OF		

QTY	DESCRIPTION	PART NO.	FIND NO.
	PARTS LIST		

digital

TITLE 1134A POWER SUPPLY ASSY

SIZE	CODE	NUMBER	REV.
E	UA	7013323-0-0	A

DIST.

UA 7013323-0-0 A

CONNECTION TABLE		
FROM CONNECTION	TO CONNECTION	SIGNALS
P2 FROM TRANS. ASSY	J2 FROM +15V REG.	28 VAC
J16 FROM PWR. DIST. BD.	P16 LOCATED ON REG.#4 (H754) OR (H785)	GND, -5V, +20V 28 VAC#5V8, -15V, +15V
J15 FROM PWR. DIST. BD	P15 LOCATED ON REG.#3 (H7441)	GND, +5V, 28VAC
J14 FROM PWR DIST. BD	P14 LOCATED ON REG.#2 (H7441)	GND, +5V, 28VAC
J13 FROM PWR DIST. BD	P13 LOCATED ON REG.#1 (H745)	GND, +15V, -15V -#8 VAC
GND LUG LOCATED ON PWR. DIST. BD.	REG. #4 MOUNTING SCREW	GROUND CHASSIS
P1 FROM TRANS ASSY	J1 LOCATED ON PWR DIST. BD	28 VAC

CONNECTION TABLE		
FROM CONNECTION	TO CONNECTION	SIGNALS
P4 FROM +15V REG.	12 LOCATED ON PWR DIST BD	-15 V, LTC L, AC LO L, DC LO L, GND
P5 FROM TRANS. ASSY	J5 LOCATED ON AC INPUT BOX	120/240 VAC
P7 (RED)	FAN #1-A	120 VAC - HOT
P8 (WHT)	FAN #1-B	120 VAC - NEUTRAL
P9 (RED)	FAN #2-A	120 VAC - HOT
P10 (WHT)	FAN #2-B	120 VAC - NEUTRAL
+1 #14 GRN/YEL WIRE	SEE NOTE 5	CHASSIS GROUND

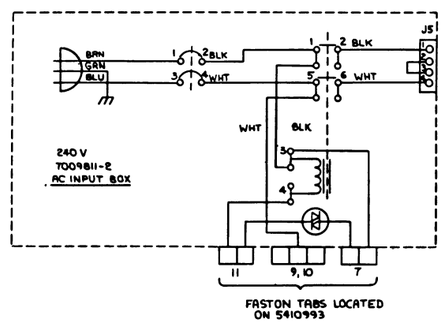

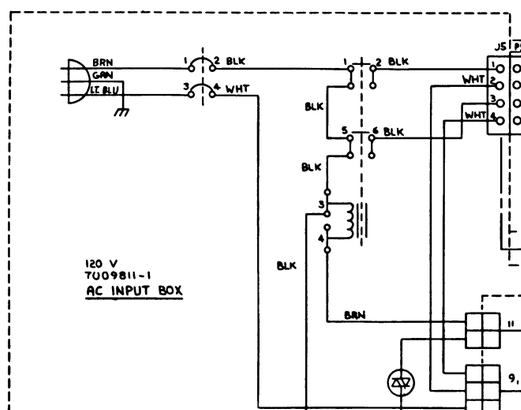

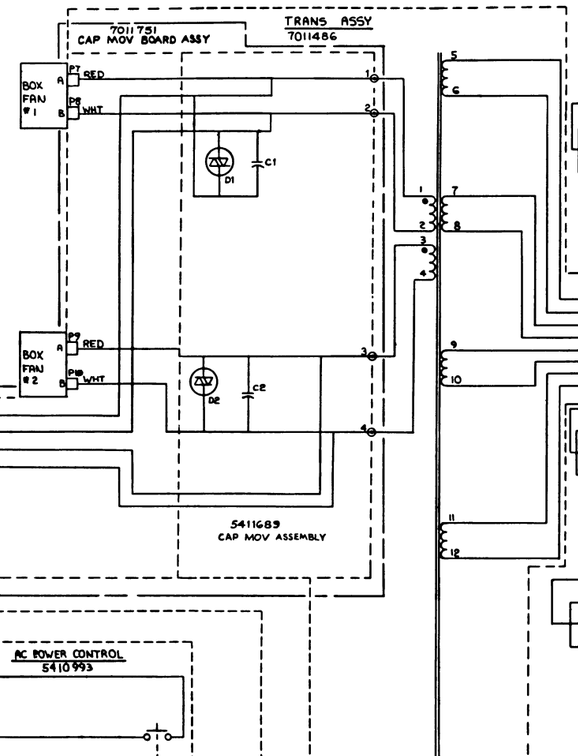

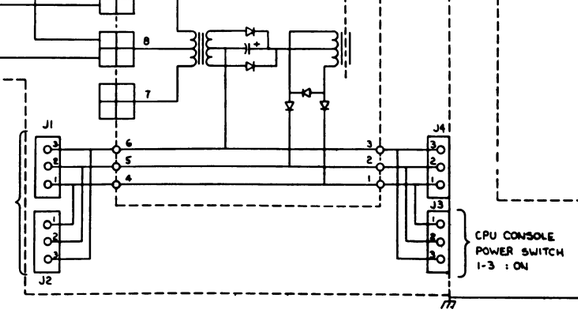

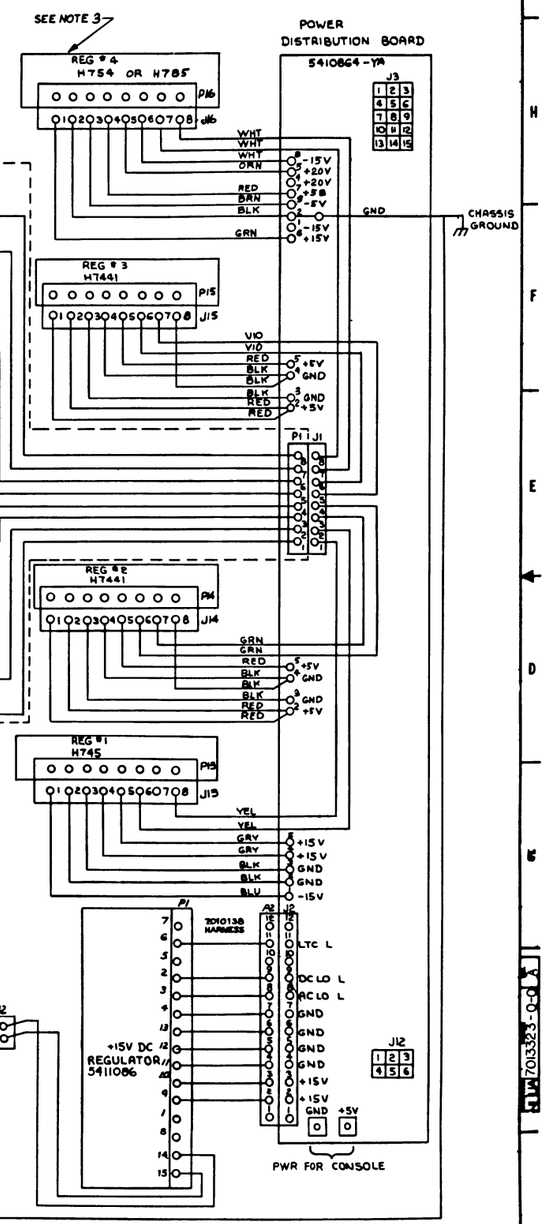

COMMON SIGNAL NAMES FOR 6 PIN AND 15-PIN MATE-N-LOKS ON POWER DISTRIBUTION BOARD

6-PIN	15 PIN
1 - GND	1 - +5V
2 - LTC L	2 - +15V
3 - DC LO L	3 - +20V
4 - AC LO L	4 - +5V
5 - SPARE 4	5 - GND
6 - SPARE 5	6 - SPARE 1
	7 - GND
	8 - GND
	9 - GND
	10 - SPARE 2
	11 - GND
	12 - SPARE 3
	13 - -15V
	14 - -5V
	15 - SPARE 3

REVISIONS		
ZONE	CHANGE NO.	REV

TITLE 1134A POWER SUPPLY ASSY

SIZE E | CODE UA | NUMBER 7013323-0-0 | REV A

SCALE — | SHEET 2 OF 2

7013323-0-0

DIGITAL EQUIPMENT CORPORATION
MAYNARD, MASSACHUSETTS

PARTS LIST

MADE BY	R. PELLERIN	CHECKED	D. HEALY	SECTION	1
DATE	23 NOV 76	DATE	15 DEC 76		
ENG	[illegible]	PROD	[illegible]	ISSUED SECT.	1
DATE	16-FEB-77	DATE	16-FEB-77		

ITEM NO.	DWG NO./PART NO.	DESCRIPTION	QUANTITY/VARIATION 7013323-00	7013323-01	7013323-02	7013323-03	7013323-04	7013323-05						
1	E-UA-H765-P-Ø	H765-P POWER SUPPLY 115V	1	1	1	-	-	-						
2	E-UA-H765-R-Ø	H765-R POWER SUPPLY 23ØV	-	-	-	1	1	1						
3	D-UA-H785-Ø-Ø	REGULATOR, BATTERY BACK UP (H785)	-	1	-	-	1	-						
4	D-UA-H754-Ø-Ø	+20V REGULATOR (H754)	-	-	1	-	-	1						
5	D-UA-H745-Ø-Ø	-15V REGULATOR (H745)	1	1	1	1	1	1						
6	D-UA-H7441-Ø-Ø	+5V REGULATOR (H7441)	2	2	2	2	2	2						
7	E-IA-5411086-0-0	+15V REGULATOR (5411086)	1	1	1	1	1	1						
8														
9	D-CS-5410864-YA-1	POWER DISTRIBUTION BOARD (5411864-YA)	1	1	1	1	1	1						
10														
11	9008007-3	SCR, PH HD TRUSS #10 - 32 x .25	6	8	8	6	8	8						
12	9006040-3	SCR, PH HD TRUSS #8 - 32 x .62	4	4	4	4	4	4						
13	9006020-3	SCR, PH HD TRUSS #6 - 32 x .25	10	11	11	10	11	11						
14	9006635	WASHER INT. TOOTH #10	6	8	8	6	8	8						
15	9006634	WASHER INT. TOOTH #8	4	4	4	4	4	4						
16	9006633	WASHER INT. TOOTH #6	10	11	11	10	11	11						
17	D-IA-7009949-0-0	COVER, POWER SUPPLY	1	1	1	1	1	1						
18	D-IA-7009950-0-0	TROUGH, WIRE	1	1	1	1	1	1						
19	D-IA-7010138-0-0	HARNESS INTERCONNECT	1	1	1	1	1	1						
20	9007880	TIE WRAP 1/8 w	4	4	4	4	4	4						
21	A-CS-H765-TA-1	TESTER CIRCUIT SCHEMATIC	REF	REF	REF	REF	REF	REF						
22	A-SP-H765-Ø-1	TEST PROCEDURE	REF	REF	REF	REF	REF	REF						

TITLE	ASSY NO.	SIZE	CODE	NUMBER	REV.	ECO NO.
POWER SUPPLY ASSY	E-UA-7013323-0-0	A	PL	7013323-0-0	A	1134A-00002
	SHEET 1 OF 1	DIST.				

DEC FORM DEC 16-(325)-1031-N870
DRA 110

BLANK

digital EQUIPMENT CORPORATION MAYNARD MASSACHUSETTS

DRAWING DIRECTORY

"THIS DRAWING AND SPECIFICATIONS, HEREIN, ARE THE PROPERTY OF DIGITAL EQUIPMENT CORPORATION AND SHALL NOT BE REPRODUCED OR COPIED OR USED IN WHOLE OR IN PART AS THE BASIS FOR THE MANUFACTURE OR SALE OF ITEMS WITHOUT WRITTEN PERMISSION. COPYRIGHT © 1974 , DIGITAL EQUIPMENT CORPORATION"

CUSTOMER PRINT SET INDEX

	SEQUENCE
DRAWING DIRECTORY H765	B-DD-H765-Ø
UNIT ASSY H765	E-UA-H765-Ø-Ø
AC INPUT BOX ASSY	D-AD-7014420-Ø-Ø
AC PWR CONTROL BOARD	D-UA-5413089-Ø-1
DRAWING DIRECTORY H744	B-DD-H744-Ø
DRAWING DIRECTORY H745	B-DD-H745-Ø
DRAWING DIRECTORY H754	B-DD-H754-Ø
PWR DISTRIBUTION BOARD	D-CS-5410864-0-1
AC POWER CORD	D-AD-7012500-0-0
PWR LINE MONITOR/15V REG	D-CS-5411086-0-1
TRANSFORMER ASSEMBLY	E-AD-7011486-0-0

	SEQUENCE
MFG. PRINT SET	
PACKAGING INSTRUCTIONS	A-SP-3700174-0-0

THIS IS PRINT SET

UNIT VARIATIONS

VAR	TITLE	PRINT SET 1			
H765-A	120V 50/60 HZ	X			
H765-B	240V 50/60 HZ	X			
H765-C	120V 50/60 HZ NO H754 NO B.B.	X			
H765-D	240V 50/60 HZ NO H754 NO B.B.	X			
H765-P	120V 50/60 HZ NO REG	X			
H765-R	240V 50/60 HZ NO REG	X			

REVISIONS			
REV	CHG. NO.	DATE	
A	H765-3	CN	
B	H765 4	CN	
C	H765-6	SL	
D	H765-7	SL	
E	H765-8	RK	
F	H765-9	RTB	
H	H765-10	R.P.	
J	H765-11	R.P.	
K	H765-12	KT	
L	H765-13	KT	
M	H765-14	G.G.	
N	H765-15	KT	
P	H765-16	8-77	
R	H765-17	9-77	

USED ON OPTION/MODEL	
BA11-K	
11/35-S	

SHEET 1 OF 5

DRN. J. FERGUSON	DATE 6/25/74	TITLE DRAWING DIRECTORY POWER SUPPLY H765
CHK'D. D. HEALY	DATE 7/3/74	
PROJ ENG. E. Burton	DATE 9/4/74	
PROD. R.V. Peterson	DATE 10/11/74	SIZE B · CODE DD · NUMBER H765-Ø · REV R
FIELD SERV R. L. Gates	DATE 9/13/74	DIST

DEC 16-1325-1-06-1-R-0972

DRB 106

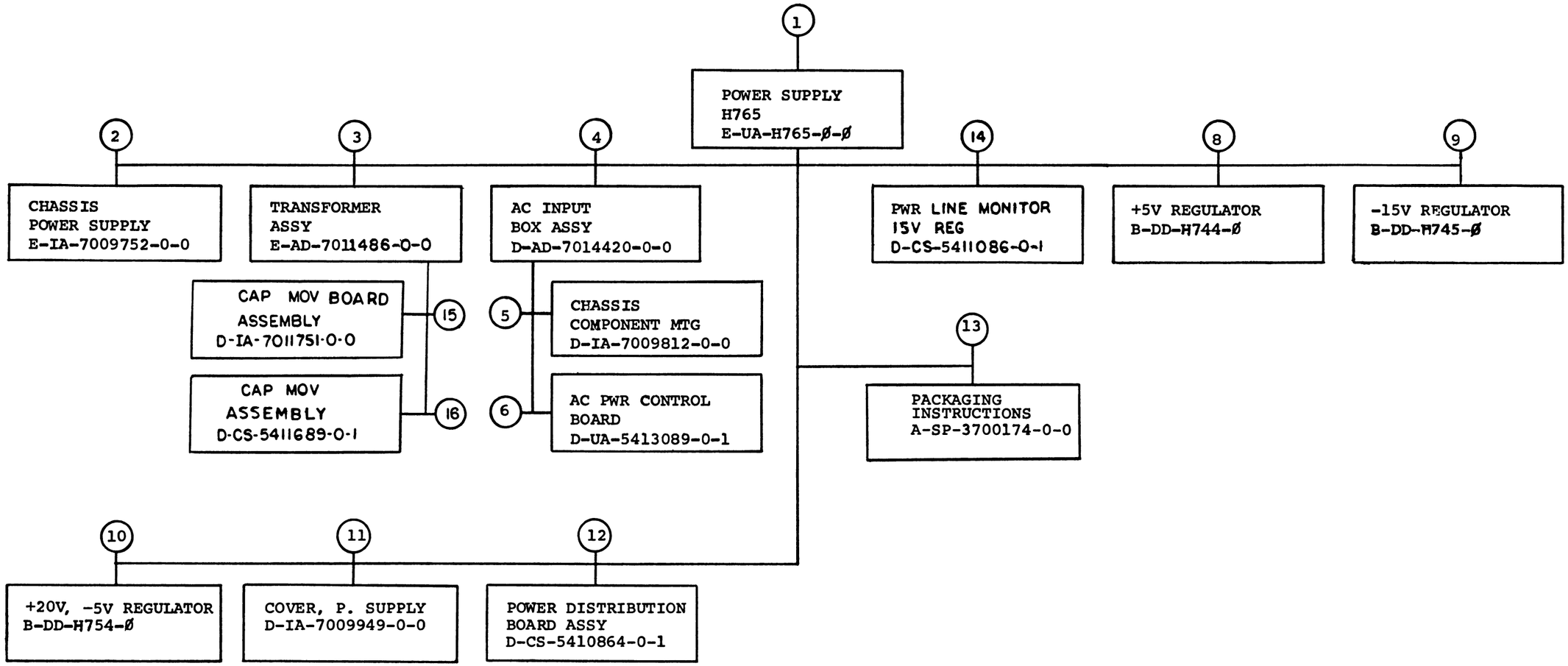

TITLE		SIZE	CODE	NUMBER	REV
DRAWING DIRECTORY POWER SUPPLY H765	SHEET 2 OF 5	B	DD	H765-Ø	R

DRB 107
DEC 16—(325)—1062—3—N871

CUSTOMER PRINT SET 1	MFG. SET	FIND NO.	DRAWING NO.	REV	NO OF SHT	DESCRIPTION	OPTION NO./FILE DATE
			ELECTRICAL				
X		1	E-UA-H765-Ø-Ø	T	2	POWER SUPPLY H765	
			A-SP-H765-0-9			H765 POWER SUPPLY ASSEMBLY PROCEDURE	
X		3	E-AD-7011486-0-0	#		TRANSFORMER ASSY	
			A-SP-7010014-0-8	A		TEST PROCEDURE	
			A-CS-7010014-TA-1	A		TESTER C.S.	
			A-UA-7010014-TA-0			TESTER U.A.	
			A-PL-7010014-TA-0	A		TESTER P.L.	
			A-SP-7011486-0-9			TRANSFORMER ASSY PROCEDURE	
X		4	D-AD-7014420-0-0	#	2	AC INPUT BOX ASSY	
			A-SP-7009811-0-8			TEST PROCEDURE	
			A-CS-7009811-TA-1			TESTER C.S.	
			A-UA-7009811-TA-0			TESTER U. A.	
			A-PL-7009811-TA-0			TESTER P.L.	
			A-SP-7009811-0-9			AC INPUT BOX ASSY PROCEDURE	
X		6	D-UA-5413089-0-0			PILOT CONTROL BOARD	
C		8	B-DD-H744-0	#	2	DRAWING DIRECTORY H744	
C		9	B-DD-H745-0	#	2	DRAWING DIRECTORY H745	
C		10	B-DD-H754-0	#	3	DRAWING DIRECTORY H754	

CUSTOMER PRINT SET 1	MFG SET	FIND NO.	DRAWING NO.	REV	NO OF SHT	DESCRIPTION	OPTION NO./FILE DATE
			ELECTRICAL				
X		12	D-CS-5410864-0-1	#	3	POWER DIST. BD. ASSY	
			D-IA-5010863-0-0	#	1	ETCHED CIRCUIT BOARD	
			A-SP-5410864-0-8			TEST PROCEDURE	
			A-SP-5410864-0-9			ASSEMBLY PROCEDURE	
X		14	D-CS-5411086-0-1	#	4	PWR LINE MONITOR/15V REG	
			A-SP-11/45-TA-2			TEST PROCEDURE	
			A-SP-5411086-0-3			ENGINEERING SPECIFICATION	
			D-IA-7010138-0-0			HARNESS INTERCONNECTION	
		15	D-IA-7011751-0-0			CAP MOV BOARD ASSY	
		16	D-CS-5411689-0-1			CAP MOV ASSY	

CUSTOMER PRINT SET CODES
X = PRINT OF DOCUMENT INCLUDED IN PRINT SET
C = INCLUDES ALL PRINTS INDICATED ON DOCUMENT
S = CONFIDENTIAL AUTHORIZED SIGNATURE REQUIRED

TITLE	SHEET	SIZE	CODE	NUMBER	REV
DRAWING DIRECTORY POWER SUPPLY H765	3 OF 5	B	DD	H765-Ø	R

DRB 108
DEC 16-(325)-1062-2B-R972

CUSTOMER PRINT SET 1	MFG. SET	FIND NO.	DRAWING NO.	REV	NO OF SHT	DESCRIPTION	OPTION NO./FILE DATE
			MECHANICAL				
		1	E-UA-H765-Ø-Ø	R		POWER SUPPLY H765	
			D-IA-7009950-0-0		1	THROUGH WIRE	
		2	E-IA-7009752-0-0		1	CHASSIS, POWER SUPPLY	
			E-IA-7411682-0-0		1	CHASSIS, POWER SUPPLY	
			D-MD-7411685-0-0		1	SIDE, POWER SUPPLY	
			D-MD-7411684-0-0		1	HOUSING COMP. CHASSIS	
		3	E-AD-7011486-0-0		2	TRANSFORMER ASSY	
			C-MD-7414301-0-0		1	COVER	
		4	D-AD-7014420-0-0		2	AC INPUT BOX ASSY	
			A-DC-7412303-0-1		1	DECAL 115V	
X			D-AD-7012500-0-0		1	POWER CORD	
			A-DC-7412380-0-1		1	DECAL 230V	
		5	D-IA-7009812-0-0	A	1	CHASSIS COMPONENT MTG.	
			D-IA-7411765-0-0		1	PLATE SWITCH	
			D-IA-7411766-0-0	B	1	PLATE COMPONENT MTG.	

CUSTOMER PRINT SET 1	MFG SET	FIND NO.	DRAWING NO.	REV	NO OF SHT	DESCRIPTION	OPTION NO / FILE DATE
			MECHANICAL				
		6	D-UA-5413089-0-0			PILOT CONTROL BOARD	
		8	B-DD-H744-Ø		2	DRAWING DIRECTORY H744	
		9	B-DD-H745-Ø		2	DRAWING DIRECTORY H745	
		10	B-DD-H754-Ø		3	DRAWING DIRECTORY H754	
		11	D-IA-7009949-0-0		1	COVER, POWER SUPPLY	
			C-MD-7412473-0-0		1	STRIP, CLAMP	

CUSTOMER PRINT SET CODES
X = PRINT OF DOCUMENT INCLUDED IN PRINT SET
C = INCLUDES ALL PRINTS INDICATED ON DOCUMENT
S = CONFIDENTIAL AUTHORIZED SIGNATURE REQUIRED

TITLE	SHEET	SIZE	CODE	NUMBER	P·V
DRAWING DIRECTORY POWER SUPPLY H765	4 OF 5	B	DD	H765-Ø	R

DRB 108
DEC 16-(325)-1062-2B-R972

CUSTOMER PRINT SET 1				MFG. SET	FIND NO.	DRAWING NO.	REV	NO OF SHT	DESCRIPTION	OPTION NO./FILE DATE
						MECHANICAL				
					12	D-CS-5410864-0-1		3	POWER DIST. BD. ASSY	
						C-MD-7412192-0-0		1	SHIELD	
						D-MD-7411704-0-0		1	BRACKET, CONN. MTG.	
						C-IA-9305937-0-0			MATE-N-LOK FIXTURES	
						D-IA-5010863-0-0		1	ETCHED CIRCUIT BD.	
						K-CO-5410864-0-4			X-Y COORDINATE HOLE LOC.	
						D-AH-5410864-0-5		1	ASSY DRILLING HOLE LAYOUT	
						B-MH-5410864-0-6		1	MODULE ECO HISTORY	
						5010863		REF	ETCH CIRCUIT BOARD	
				X	13	A-SP-3700174-0-0	-	2	PACKAGING INSTRUCTIONS	
						A-PS-9905664-0-0	-	2	REGULAR SLOTTED CARTON	
						A-PS-9905665-0-0	-	2	LAMINATED BUILDUP	
					14	D-AH-5411086-0-5		1	ASSY DRILLING HOLE LAYOUT	
						B-MH-5411086-0-6		1	MODULE ECO HISTORY	
					15	D-AD-7011486-0-0		1	ASSEMBLY DRAWING	
					16	D-AH-5411689-0-5		1	ASSY DRILLING HOLE LAYOUT	
						D-MH-5411689-0-6		1	MODULE ECO HISTORY	

CUSTOMER PRINT SET				MFG SET	FIND NO.	DRAWING NO.	REV	NO OF SHT	DESCRIPTION	OPTION NO./FILE DATE

CUSTOMER PRINT SET CODES
X = PRINT OF DOCUMENT INCLUDED IN PRINT SET
C = INCLUDES ALL PRINTS INDICATED ON DOCUMENT
S = CONFIDENTIAL AUTHORIZED SIGNATURE REQUIRED

TITLE	SHEET	SIZE	CODE	NUMBER	REV
DRAWING DIRECTORY POWER SUPPLY H765	5 OF 5	B	DD	H765-Ø	R

DRB 108

LEGEND	
NUMBER	VARIATION
H765-A	120V 50/60 HZ
H765-B	240V 50/60 HZ
H765-C	120V 50/60 HZ NO H754
H765-D	240V 50/60 HZ NO H754
H765-P	120V 50/60 HZ 11" REC
H765-R	240V 50/60 HZ NO REG

NOTES CON'T

10. ITEM 16/56 (SCREW & WASHER) TO BE USED TO MOUNT 541108-1 (ITEM 4) IN AC INPUT BOX (ITEM 2 OR 3) IN A,B,C,D VERSION. IN P&R VERSION INSTALL SCREW & WASHER IN MOUNTING HOLES. THEY WILL BE USED ON A HIGHER ASSEMBLY.

NOTES

1. ~~SEE TRANSFORMER ASSY E AD 7010014 SHEET 2 FOR ISOMETRIC ORIENTATION OF CLAMP & PLUG WIRES.~~
2. TIGHTEN FAN SCREWS TO 10 IN LBS WITH A TORQUE SCREW DRIVER
3. ~~USE ITEM 24 IN PLACE OF ITEM #22 WHEN USING ROBRON FANS.~~
4. INSTALL ABS VINYL, VIEW B B ITEM #42 AND #43. CENTER 1/4 INCH FROM BOTTOM AND SIDES ON INSIDE WALL.
5. ~~USE EXTERNAL TOOTH WASHER UNDER MOUNTING SCREW ON ALL OF ALL D TRANSFORMERS ONLY.~~
6. ~~GREEN/YEL GRN/BLK WIRE FROM TRANSFORMERS TO BE FASTENED UNDER REGULATOR MOUNTING SCREW.~~
7. ~~IN EARLIER VERSIONS OF THE TRANSFORMER ASSEMBLY A CABLE CLAMP WAS USED IN PLACE OF THE 3 TIE WRAPS TO DRESS THE TRANSFORMER WIRES ALONG THE TRANSFORMER BODY.~~
8. ITEM 7 - H754 IS NOT USED IN VARIATIONS C & D.
9. ITEM 53 IS TO BE USED TO PREVENT CORROSION OF CHASSIS AT GROUND STUD.

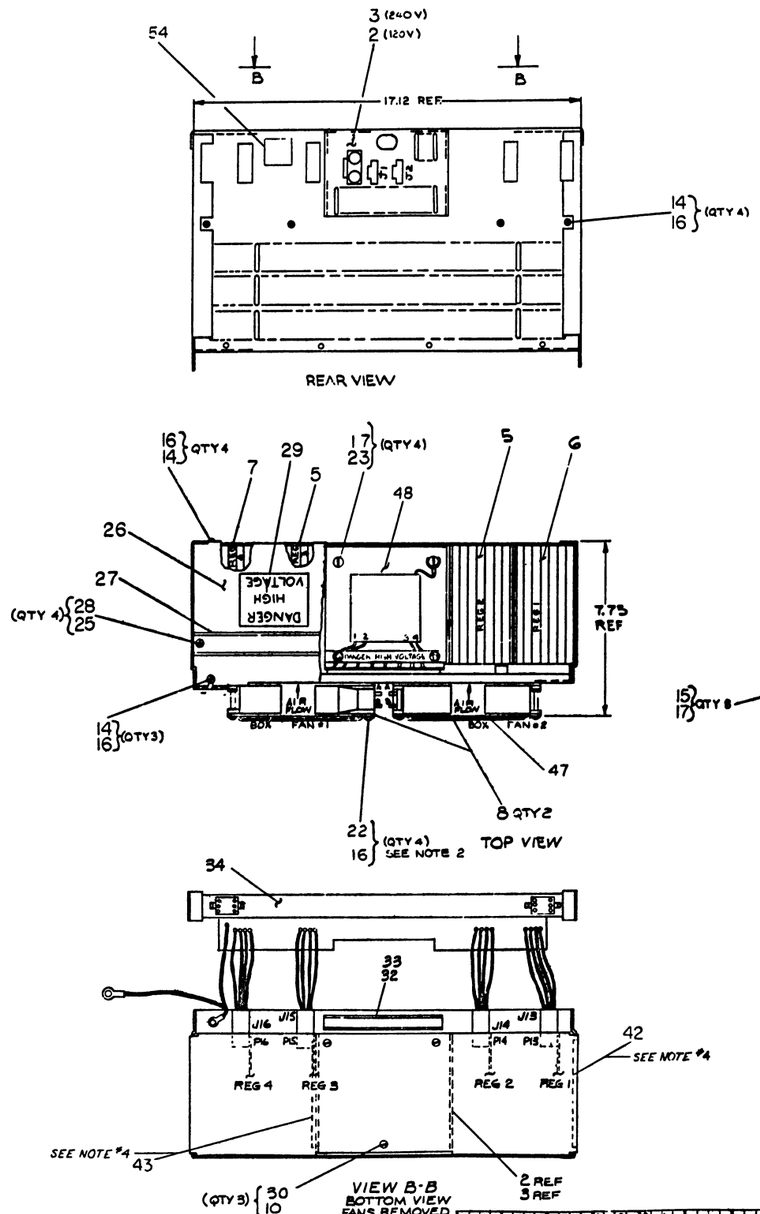

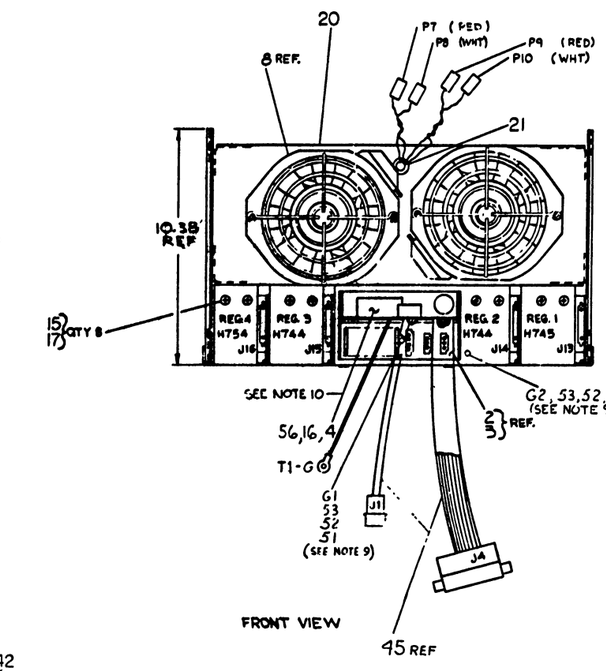

4	4	4	4	4	4	SCR PH HD 6-32X1/4	9006020-1	56
1	1	1	1	1	1	CABLE GND	70:38225-02	55
1	1	—	—	—	—	DECAL	A DC 741826-1-0	54
A/R	A/R	A/R	A/R	A/R	A/R	GREASE CONDUCTOR	4901173-01	53
2	2	2	2	2	2	WASHER, LOCK EXT TOOTH #8-32	9008072	52
2	2	2	2	2	2	NUT, KEP #8-32	9006563	51
2	2	2	2	2	2	TERMINAL, RING DUAL	[illegible]	50
A/R	A/R	A/R	A/R	A/R	A/R	WIRE, HEAT SHRK 3/8 YEL	[illegible]	49
1	1	1	1	1	1	TRANSFORMER ASSEMBLY	E-AD 7011486-0 0	48
2	2	2	2	2	2	FAN GUARD	1212561	47
—	—	—	—	—	—	WIRE, WIRE 20 AWG	[illegible]	46
1	1	1	1	1	1	HARNESS INTERCONN.	D IA-7010133-0-0	45
—	—	—	—	REF	REF	WASH EXT TOOTH #8	[illegible]	44
1	1	1	1	1	1	ABS VINYL 4.75 X 3.5	1210984-02	43
1	1	1	1	1	1	ABS VINYL 4.75 X 6	1210984-04	42
—	—	—	—	REF	REF	SCR, PH HD 6-32X3/8	[illegible]	41
REF	REF	REF	REF	REF	REF	TEST PROCEDURE	A-SP-H765-0-1	40
REF	REF	REF	REF	REF	REF	TESTER C.S.	A-CS-H765-TA-1	39
REF	REF	REF	REF	REF	REF	TESTER U.A.	E-UA-H765-TA-1	38
REF	REF	REF	REF	REF	REF	TESTER P.L.	A-PL-H765-TA-0	37
REF	REF	REF	REF	REF	REF	H765 POWER SUPPLY ASSEMBLY PROCEDURE	A-SP-H765-0-9	36
REF	REF	REF	REF	REF	REF	PACKAGING INSTRUCTIONS	A-SP-3700174-00	35
—	—	1	1	1	1	PWR DISTRIBUTION BD	D-CS-541084-0-1	34
A/R	A/R	A/R	A/R	A/R	A/R	PERMA BOND	9009157	33
A/R	A/R	A/R	A/R	A/R	A/R	GROMMET STRIP	9008291	32
4	4	4	4	4	4	TIE WRAP 1/8 W	9007880	31
3	3	3	3	3	3	WASH, C'SK #6	9008270	30
1	1	—	—	1	1	STICKER DANGER HIGH VOLTAGE	3610267	29
4	4	4	4	4	4	WASH, INT TOOTHLOCK #8	9006634	28
1	1	—	—	1	1	TROUGH, WIRE	D-IA7009450-0-0	27
1	1	—	—	1	1	COVER, POWER SUPPLY	D-IA7009449-0-0	26
4	4	4	4	4	4	SCR PH HD TRUSS #8-32X.62	9006040-3	25
—	—	—	—	4	4	HEX NUTS 5/16-32	9008545	24
4	4	4	4	4	4	SCR PH HD TRUSS 10-32X.50	9006073-3	23
4	4	4	4	4	4	SCR PH HD TRUSS 6-32X1.75	9006031-3	22
1	1	1	1	1	1	GROMMET 501 D	9007016	21
1	1	1	1	1	1	CHASSIS POWER SUPPLY	E IA-7009752-0 0	20
—	—	—	—	REF	REF	CLAMP CABLE	[illegible]	19
—	—	—	—	2	2	SCR PH HD PL 5-40X.50	9006013-3	18
—	—	10	10	12	12	WASH INT TOOTH #10	9006635	17
11	11	17	17	17	17	WASH INT TOOTH #6	9006633	16
—	—	6	6	8	8	SCR PH HD TRUSS 10-32X.25	9008077-3	15
7	7	11	11	11	11	SCR PH HD TRUSS 6-32X.25	9006020-3	14
—	—	—	—	—	1	DECAL, NEBA	[illegible]	13
—	—	—	—	1	1	DECAL, VE	[illegible]	12
—	—	—	—	2	2	SCR, PH, FLT HD 8-32X.50	9008064-2	11
3	3	3	3	3	3	SCR, PH, FLT HD 8-32X.31	9008604-2	10
—	—	—	—	2	2	NUTS, CLIP	[illegible]	9
2	2	2	2	2	2	FAN, 115 VAC 50/60HZ	1211714	8
—	—	—	—	1	1	+20V REGULATOR (H784)	B DD-H754-0	7
—	—	1	1	1	1	-15 V REGULATOR (H745)	B-DD-H745-0	6
—	—	2	2	2	2	+5 V REGULATOR (H744)	B-DD-H744-0	5
—	—	1	1	1	1	PWR. BD (+15V REG.)	E-IA-541086	4
1	1	—	—	1	—	AC INPUT BOX ASSY 230V	D-AD 7014420-2-0	3
—	1	—	1	—	1	AC INPUT BOX ASSY 115V	D-AD-7014420-1-0	2
—	—	—	—	1	—	TRANSFORMER ASSY	D-AD-7010014-0	1
H765-R	H765-P	H765-D	H765-C	H765-B	H765-A			

QTY	DESCRIPTION	PART NO	ITEM NO.

PARTS LIST

FIRST USED ON OPTION/MODEL: BAII-K

DIMENSIONAL TOLERANCE

DIMENSIONS ARE INCHES UNLESS OTHERWISE SPECIFIED

MILLIMETERS: X.X ± 0.10, X.XX ± 0.05, X.XXX ± 0.025

INCHES: .XXX ± .005, .XX ± .010, .X ± .030

ANGLES: 90° ±

THIRD ANGLE PROJECTION

REMOVE BURRS AND BREAK SHARP CORNERS

COMMON SURFACE QUALITY

MATERIAL: SEE PARTS LIST

FINISH

DRN. B. [illegible] DATE 6-26-78

CHK'D. [illegible]

ENG. [illegible] DATE 6-26-78

PROD. ENG. [illegible] DATE 8-23-78

NEXT HIGHER ASSY

SCALE NONE

SHEET 1 OF 2

digital

TITLE: POWER SUPPLY, H765

SIZE: E CODE: UA-H765-B-0

DIST.

REV

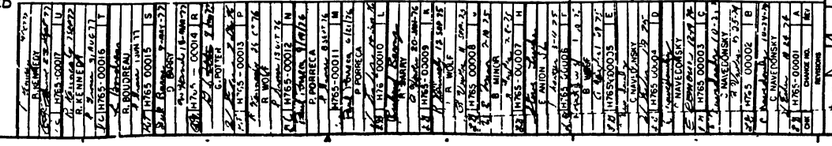

CONNECTION TABLE		
FROM CONNECTION	TO CONNECTION	SIGNALS
P2 FROM TRANS. ASSY	J2 FROM +15V REG.	28 VAC
J16 FROM PWR. DIST. BD.	P16 LOCATED ON REG.#4 (H754)	GND, -5V, +20V 28 VAC
J15 FROM PWR. DIST. BD	P15 LOCATED ON REG.#3 (H744)	GND, +5V, 28VAC
J14 FROM PWR DIST. BD	P14 LOCATED ON REG.#2 (H744)	GND, +5V, 28VAC
J13 FROM PWR DIST. BD	P13 LOCATED ON REG.#1 (H745)	GND, +15V, -15V 28 VAC
GND LUG LOCATED ON PWR DIST. BD. G3	G1 YEL LUG	SAFTY GROUND
P1 FROM TRANS ASSY	J1 LOCATED ON PWR. DIST. BD	28 VAC

CONNECTION TABLE		
FROM CONNECTION	TO CONNECTION	SIGNALS
P4 FROM +15V REG.	J2 LOCATED ON PWR DIST BD	-15V, LTC L, AC LO L, DC LO L, GND
P5 FROM TRANS. ASSY	J5 LOCATED ON AC INPUT BOX	120/240 VAC
P7 (RED)	FAN #1-A	120 VAC - HOT
P8 (WHT)	FAN #1-B	120 VAC - NEUTRAL
P9 (RED)	FAN #2-A	120 VAC - HOT
P10 (WHT)	FAN #2-B	120 VAC - NEUTRAL
T1-G	G1	SAFETY GROUND
G1	G2	ITEM 55

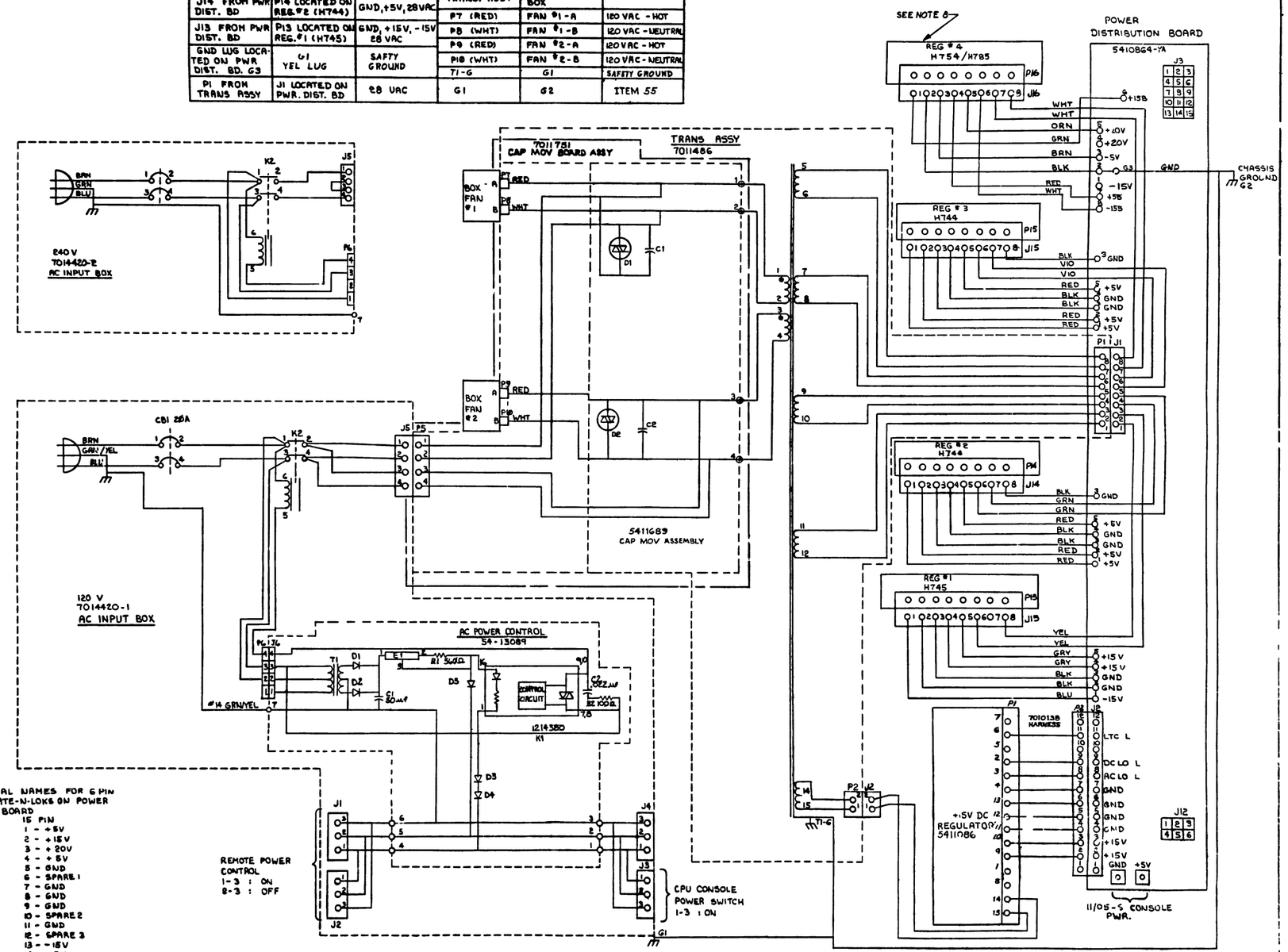

TITLE POWER SUPPLY H765

SIZE E CODE UA NUMBER H765-0-0

"THIS DRAWING AND SPECIFICATIONS, HEREIN, ARE THE PROPERTY OF DIGITAL EQUIPMENT CORPORATION AND SHALL NOT BE REPRODUCED OR COPIED OR USED IN WHOLE OR IN PART AS THE BASIS FOR THE MANUFACTURE OR SALE OF ITEMS WITHOUT WRITTEN PERMISSION. COPYRIGHT © 1977 , DIGITAL EQUIPMENT CORPORATION"

NOTES:

1. LEAVE .51IN ±.21IN CF OUTER INSULATION OF LINE CORD INSIDE BOX.
2. REMOVE PAINT MASK FROM G1 ONLY AND APPLY CONDUCTIVE GREASE TO AREA AROUND STUD G1 BEFORE INSTALLING ITEMS #31 (LOCKWASHER), LUG ON GRN/YEL WIRE AND #20 (KEPNUT).
3. ENSURE THAT LUG CONNECTED TO GRN/YEL WIRE FROM LINE CORD, WASHER ITEM #31, AND KEPNUT ITEM #20 ARE THE FIRST ITEMS INSTALLED ON G1. SEE DETAIL "A".
4. STRIP LENGTH FOR ITEM #36 AND ITEM #29 SHALL BE .250±.015.
5. STRIP LENGTH FOR ITEM #37
   A. HAND CRIMP .187 ±.015
   B. AUTOMATIC STRIP .156±.015
6. STRIP LENGTH FOR ITEM #35
   A. HAND CRIMP .203 ±.015
   B. AUTOMATIC STRIP .182±.015

LEGEND	
NUMBER	VARIATION
7014420-1	120V 47-63HZ 12A
7014420-2	240V 47-63HZ 6A

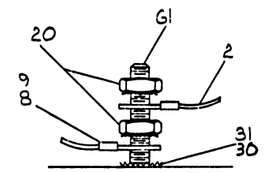

DETAIL "A"
SEE NOTES 2&3

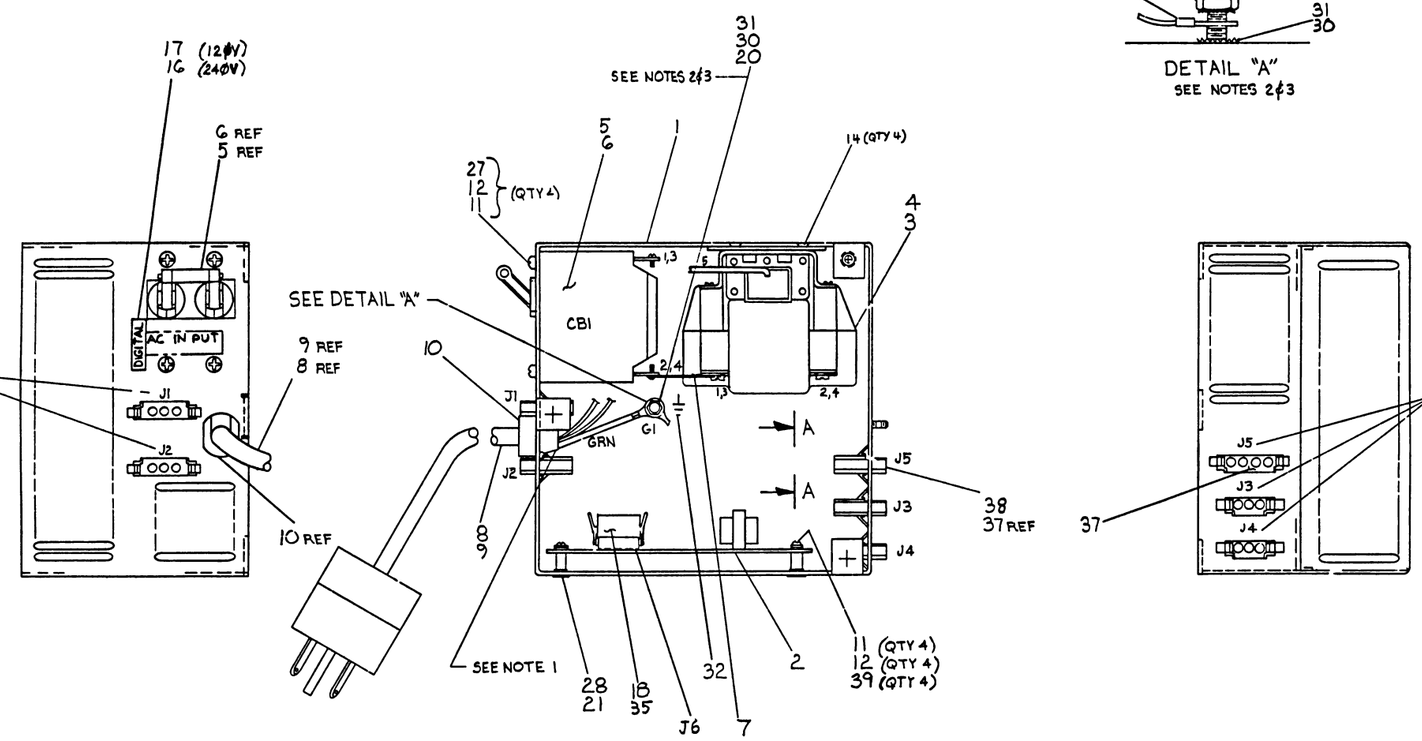

REV	CHG	CHANGE NO.	
	JC	7014420-0001	A
		R. KENNEDY	
		7014420	B
		W.F. BAUSHA	

ITEM NO.	QTY 7014420-2	QTY 7014420-1	DESCRIPTION	DWG./PART NO.
39	4	4	WASHER, FLAT NYLON	9006707-00
38	1	1	CONN 4 PIN	1209350-04
37	4	4	SOCKET, MATE-N-LOCK	1209379
36	1	3	TERM BLUE RING	9007928
35	4	4	CONNECTOR, SOCKET	1212170-00
34	A/R	A/R	WIRE #18 BRN	9107360-11
33	A/R	A/R	WIRE #18 BLU	9107360-66
32	1	1	DECAL, SAFETY GROUND	A-DC-3612680-01
31	1	1	WASHER, EXT TOOTH #8	9008072
30	A/R	A/R	GREASE, CONDUCTIVE	4901173-01
29	3	1	TERMINAL, RED RING	9007930
28	4	4	SCR. PH FL HD 6-32 X 1/4	9006020-06
27	4	4	WASHER, FLAT #6	9006656
26	REF	REF	A.C. INPUT BOX ASSEMBLY PROCEDURE	A-SP-7014420-0-9
25	REF	REF	TESTER PARTS LIST	A-PL-7009811-7A-0
24	REF	REF	TESTER TEST PROCEDURE	A-SP-7009811-0-8
23	REF	REF	TESTER U.A.	A-UA-7009811-0-8
22	REF	REF	TESTER C.S.	A-CS-7009811-0-8
21	4	4	SPACER 6-32 X 3/16"	9006844
20	2	2	NUT, KEPS #8-32	9006563
19	1	1	DECAL	A-DC-7409373-1
18	1	1	CONNECTOR, 4 PIN	1212167-01
17	—	1	DECAL 120V 47-63 HZ 12A	A-DC-7412303-1
16	1	—	DECAL 240V 47-63 HZ 6A	A-DC-7412380-1
15	~~4~~	~~4~~	~~SCR. PH.FL HD #6-32 X .50~~	~~9006024-2~~
14	4	4	SCR PH.FL HD. 4-40 X .19	9000039-06
13	~~4~~	~~4~~	~~NUT KEPS #6-32~~	~~9008185~~
12	8	8	WASHER, INT TOOTH #6	9006633
11	8	8	SCR PHL PAN HD #6-32 X .25	9006020-1
10	1	1	STRAIN RELIEF	9008509
9	1	—	POWER CORD 240V	D-AD-7012500-1
8	—	1	POWER CORD 120V	D-AD-7012500-0
7	2	2	JUMPER STRAP	1214074-02
6	1	—	CIRCUIT BREAKER 10A	1212124-03
5	—	1	CIRCUIT BREAKER 20A	1212124-05
4	1	—	CONTACTOR 240V	1214283-01
3	—	1	CONTACTOR 120V	1214283-00
2	1	1	AC PWR. CONTR BOARD	D-CS-5413089-0-1
1	1	1	CHASSIS, COMP. MTG	D-IA-7009312-0-0

UNLESS OTHERWISE SPECIFIED DIMENSIONS ARE IN INCHES

ANGLES ±0° 30'	CLASS OF ACCURACY (CHECK ONE)	NOMINAL DIMENSION RANGE INCHES: OVER 0 TO 0.3	OVER 0.3 TO 1.2	OVER 1.2 TO 4.0	OVER 4.0 TO 12.0	OVER 12.0 TO 40.0	OVER 40.0 TO 80.0
SURFACE QUALITY IN MICROINCHES	MEDIUM	±.004	±.008	±.012	±.016	±.024	±.04
	PREFERRED	±.012	±.016	±.025	±.04	±.063	±0.1

QUANTITY & VARIATION

THIRD ANGLE PROJECTION

REMOVE BURRS AND BREAK SHARP CORNERS

DO NOT SCALE DWG

MATERIAL: SEE PARTS LIST

FINISH

DRN'D		6-30-77
CHK'D		7-26-77
ENG.		9-23-77
PROJ. ENG.		10/26/77
PROD.		10-26-77
NEXT HIGHER ASSY.	E-UA-H765-0-0	
SCALE	—	
SHEET	1 OF 2	

FIRST USED ON: H765

digital

TITLE: AC INPUT BOX ASSY

SIZE	CODE	NUMBER	REV.
D	AD	7014420-0-C	B

DIST.

"THIS DRAWING AND SPECIFICATIONS, HEREIN, ARE THE PROPERTY OF DIGITAL EQUIPMENT CORPORATION AND SHALL NOT BE REPRODUCED OR COPIED OR USED IN WHOLE OR IN PART AS THE BASIS FOR THE MANUFACTURE OR SALE OF ITEMS WITHOUT WRITTEN PERMISSION. COPYRIGHT © 1977 DIGITAL EQUIPMENT CORPORATION"

WIRE TABLE-1 VAR 120V

ITEM NO	DESCRIPTION AWG.	COLOR	FROM STRIP LENGTH	CONN	WITH	TO STRIP LENGTH	CONN	WITH	PRECUT WIRE LENGTH
5	14	GRN/YEL	SEE NOTE 3	PC-1			G1		
9	14	BRN		PC-2			CB1-1		
8	14	BLU		PC-3			CB1-3		
33	18	BLU	SEE NOTE4	K2-4	36	SEE NOTE 5	J5-2	37	3.0 ± 0.25
							J5-4	37	3.0 ± 0.25
34	18	BRN	SEE NOTE4	K2-2	36		J5-1	37	3.0 ± 0.25
						SEE NOTE 5	J5-3	37	3.0 ± 0.25
34	18	BRN	SEE NOTE4	K2-1	36	SEE NOTE 6	PG-2	35	3.5 ± 0.25
3	18	YEL				—	K2-6	—	3.5 ± 0.25
7	—	—	—	K2-1	—	—	CB1-2	—	STRAP
33	18	BLU	SEE NOTE4	K2-3	29	SEE NOTE 6	PG-3	35	3.0 ± 0.25
7	—	—	—	K2-3	—	—	CB1-4	—	STRAP
3	18	YEL	SEE NOTE4	K2-5	—	SEE NOTE 6	PG-4	35	4.75 ± 0.25
2	18	GRN/YEL	SEE NOTE 6	BD-1			G1		

WIRE TABLE-2 VAR 240V

ITEM NO	DESCRIPTION AWG	COLOR	FROM STRIP LENGTH	CONN	WITH	TO STRIP LENGTH	CONN	WITH	PRECUT WIRE LENGTH
9	14	GRN/YEL	SEE NOTE 3	PC-1			G1		
9	14	BRN		PC-2			CB1-1		
9	14	BLU		PC-3			CB1-3		
33	18	BLU	SEE NOTE4	K2-4	29	SEE NOTE 5	J5-4	37	3.0 ± 0.25
34	18	BRN	SEE NOTE 4	K2-2	29	SEE NOTE 5	J5-1	37	3.0 ± 0.25
34	18	BRN	SEE NOTE 5	J5-2	37	SEE NOTE 5	J5-3	37	2.0 ± 0.25
34	18	BRN	SEE NOTE 4	K2-1	36	SEE NOTE 6	PG-1	35	3.5 ± 0.25
4	18	YEL				—	K2-6	—	3.5 ± 0.25
7	—	—	—	K2-1	—	—	CB1-2	—	STRAP
33	18	BLU	SEE NOTE4	K2-3	29	SEE NOTE 6	PG-3	35	3.0 ± 0.25
7	—	—	—	K2-3	—	—	CB1-4	—	STRAP
4	18	YEL	—	K2-5	—	SEE NOTE 6	PG-4	35	4.75 ± 0.25
2	18	GRN/YEL	SEE NOTE 6	BD-1			G1		

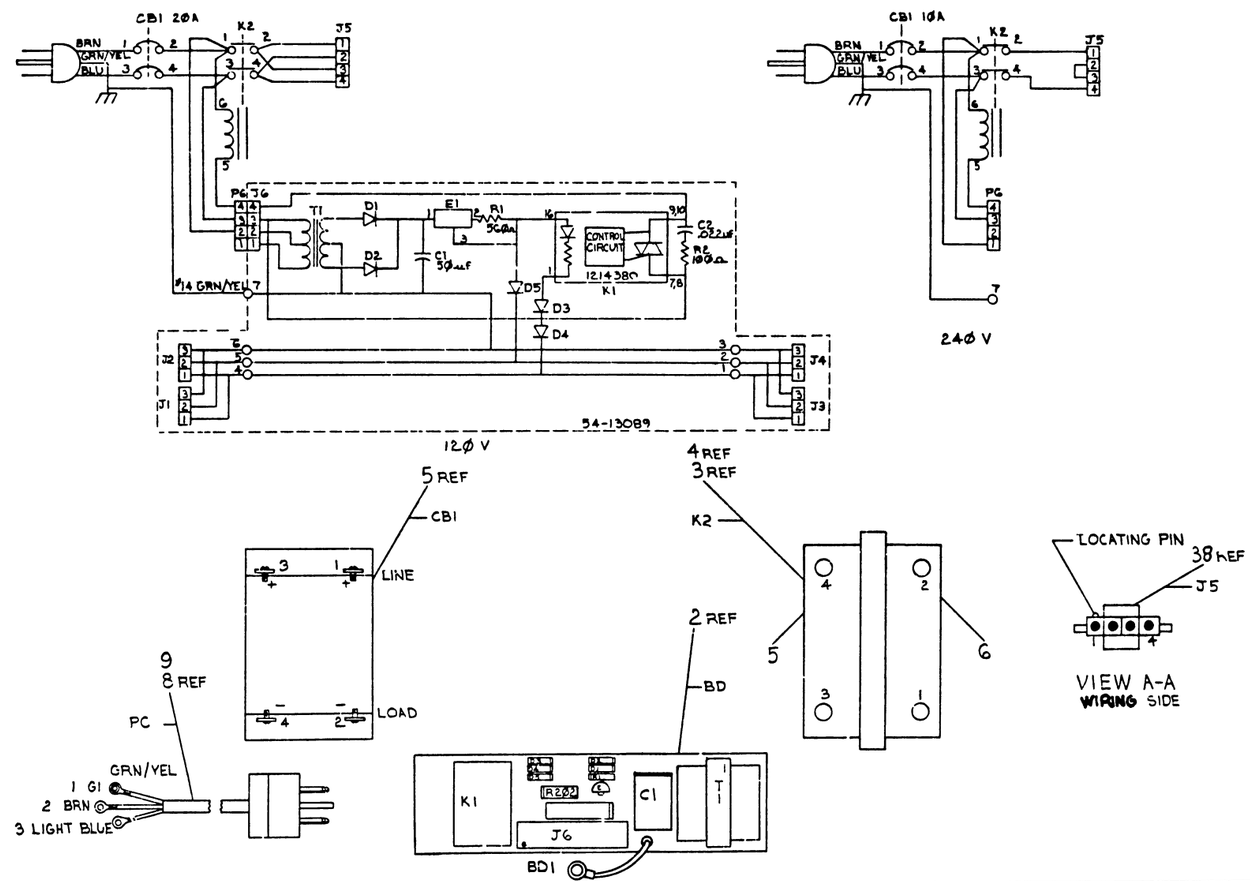

REVISIONS		
CHK	CHANGE NO.	REV.

TITLE	SIZE	CODE	NUMBER	REV.
AC INPUT BOX ASSY.	D	AD	7014420-0-0	B

SCALE — SHEET 1 OF 1 DIST

THIS DRAWING AND SPECIFICATIONS, HEREIN, ARE THE PROPERTY OF DIGITAL EQUIPMENT CORPORATION AND SHALL NOT BE REPRODUCED OR COPIED OR ASSIGNED TO ANYONE OUTSIDE THE UNITED STATES WITHOUT WRITTEN PERMISSION FROM DIGITAL EQUIPMENT CORPORATION.
COPYRIGHT © 1978 DIGITAL EQUIPMENT CORPORATION

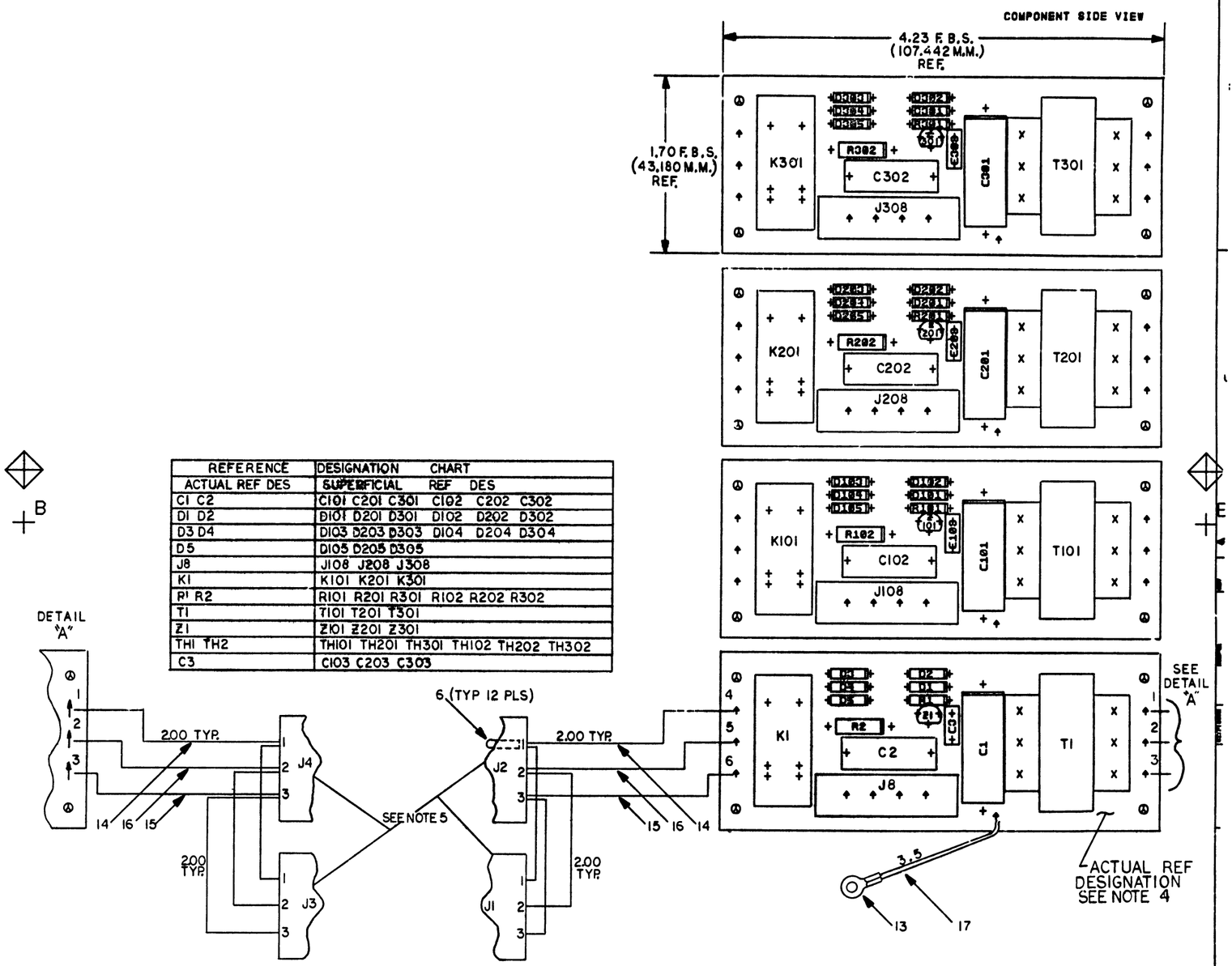

REFERENCE DESIGNATION CHART	
ACTUAL REF DES	SUPERFICIAL REF DES
C1 C2	C101 C201 C301 C102 C202 C302
D1 D2	D101 D201 D301 D102 D202 D302
D3 D4	D103 D203 D303 D104 D204 D304
D5	D105 D205 D305
J8	J108 J208 J308
K1	K101 K201 K301
R1 R2	R101 R201 R301 R102 R202 R302
T1	T101 T201 T301
Z1	Z101 Z201 Z301
TH1 TH2	TH101 TH201 TH301 TH102 TH202 TH302
C3	C103 C203 C303

NOTES: 1. THIS BOARD REQUIRES U/L APPROVAL.
2. DO NOT SLIT BOARD MUST BE SHEARED.
3. REFER TO PARTS LIST FOR IDENTIFICATION OF NUMBERED ITEMS.
4. MULTI-REF DESIGNATIONS ARE USED TO ACCOMODATE PNL INS TECHNIQUES-SEE CHART FOR REF.
5. J1, J2 J3 J4 ARE NOT USED ON YA VARIATION.

CHK	CHANGE NO	REV
	ML2074	E

ETCH REV. C-P1
P.C. DESIGN DATA BASE REV. C

SIGNATURES	DATE
DRN. STU EVANS	7-27-78
CHK'D.	1-4-79
ENG.	1/9/79
PROJ. ENG.	1/9/79
PROD.	1/9/79
SCALE 2/1	
SHT. 1 OF 3	

digital

TITLE A.C. CONTROL BOARD

SIZE	CODE	NUMBER	REV
D	UA	5413089-0-0	E

NEXT HIGHER ASSY. B-DD-5413089-0-0

MS#

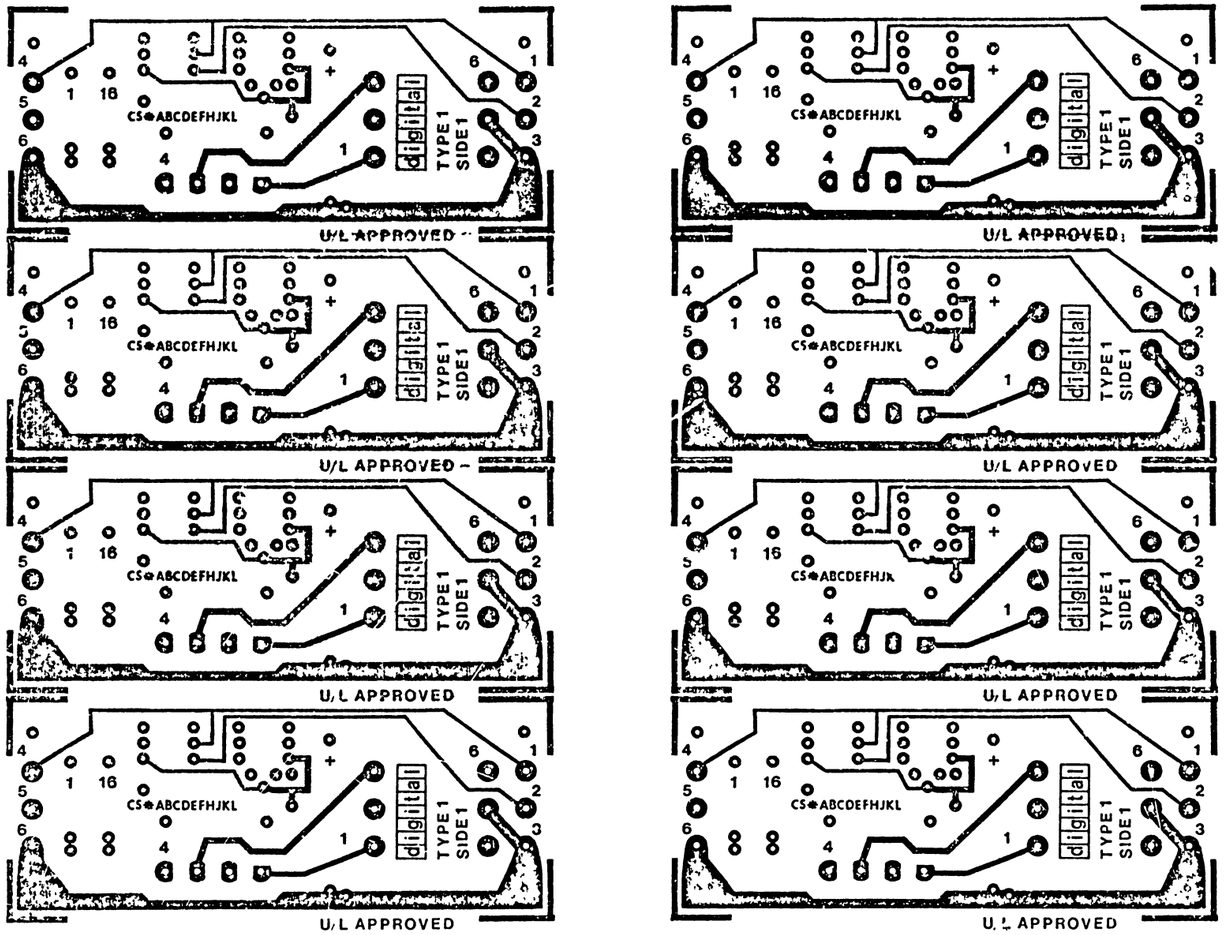

TITLE	SIZE	CODE	NUMBER	REV
AC. CONTROL BOARD	D	UA	5413089-2-0	E
SCALE 2:1	SHEET 2 OF 3		DIST	

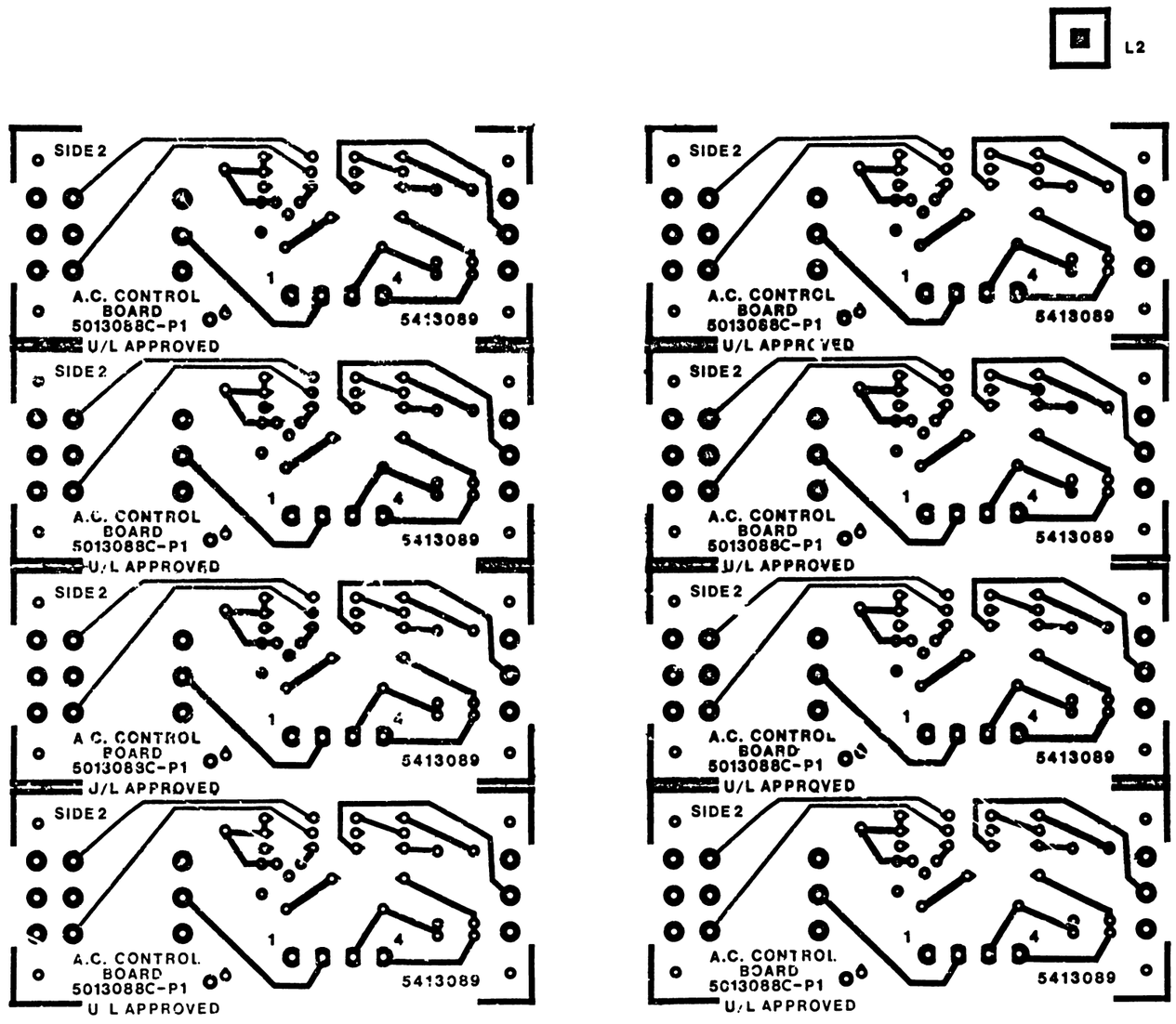

A.C. CONTROL BOARD	D	UA	5413089-0-0	E
SCALE 2:1	SHEET 3 OF 3			

"THE MATERIAL HEREIN IS FOR INFORMATION PURPOSES ONLY AND IS SUBJECT TO CHANGE WITHOUT NOTICE. DIGITAL EQUIPMENT CORPORATION ASSUMES NO RESPONSIBILITY FOR ANY ERRORS WHICH MAY APPEAR HEREIN.

DRAWING DIRECTORY

"THIS DRAWING AND SPECIFICATIONS, HEREIN ARE THE PROPERTY OF DIGITAL EQUIPMENT CORPORATION AND SHALL NOT BE REPRODUCED OR COPIED OR USED IN WHOLE OR IN PART AS THE BASIS FOR THE MANUFACTURE OR SALE OF ITEMS WITHOUT WRITTEN PERMISSION. COPYRIGHT © 1972, DIGITAL EQUIPMENT CORPORATION"

CUSTOMER PRINT SET

DRAWING DIRECTORY	B-DD-H744-0
CIRCUIT SCHEMATIC	D-CS-H744-0-1
UNIT ASSY	E-UA-H744-0-0

MFG SET

TEST PROCEDURE	A-SP-H744-0-3
MFG SPEC	A-SP-H744-0-8
PACKAGING INST	A-PI-3700074-0-0

UNIT VARIATIONS

VAR	TITLE
H744	+5V REGULATOR
H744-YA	2.0 - 8.0V VARIABLE REGULATOR

REVISIONS

CHK	CHANGE NO.	REV.
		R
GP	00019	
JA	00020	S

USED ON OPTION/MODEL	
11/45	

SHEET 1 OF 4

DRN. D.FONTAINE	DATE 2-4-72	TITLE +5V REGULATOR
CHK'D. D.FONTAINE	DATE 2-4-72	digital
PROJ. ENG. G.POTTER	DATE 2-24-72	SIZE B / CODE DD / NUMBER H744-0 / REV S
PROD. A.HIRSCH	DATE 2-24-72	DIST.

DRB 106A

SIZE	CODE	NUMBER	REV.
B	DD	H744-Ø	S

DRAWING NO.	NO. OF SHTS	PART NO.	DESCRIPTION	REVISIONS		
D-AH-H744-Ø-5			ASSY DRILLING/HOLE LAYOUT	Y	Y	Y
E-UA-H744-Ø-Ø	1		UNIT ASSY	Y	Z	AA
D-CS-H744-Ø-1	1		CIRCUIT SCHEMATIC	Y	Y	Y
B-MH-H744-Ø-6	4		MODULE ECO HISTORY	AD	AE	AE
		5009725	ETCHED BOARD	H	H	H
A-SP-H744-Ø-3			TEST PROCEDURE	REF		REF
A-SP-H744-Ø-8			MFG SPEC	REF		REF
D-PS-1210737-Ø-Ø	1		HEAT SINK	REF		REF
D-IA-5309756-Ø-Ø	1		REGULATOR BRK'T	REF		REF
C-MD-5309760-Ø-Ø	1		COMPONENT COVER	REF		REF
C-MD-5309759-Ø-Ø	1		CAPACITOR STRAP	REF		REF
A-PI-3700074-Ø-Ø	2		PACKAGING INSTRUCTION	REF		REF
A-PS-9905211-Ø-Ø	2		OUTER CARTON	REF		REF
A-PS-9905212-Ø-Ø	2		INNER PACKAGING	REF		REF
C-IA-7412388-Ø-Ø			2.5 CAP HOLDER	REF		REF
C-MD-7419952-Ø-Ø			COMPONENT COVER	REF		

NOTES:

REVISIONS			
REV.		R	S
CHG NO.	00018	00019	00020
DATE		2-77	3-78

"THIS DRAWING AND SPECIFICATIONS, HEREIN, ARE THE PROPERTY OF DIGITAL EQUIPMENT CORPORATION AND SHALL NOT BE REPRODUCED OR COPIED OR USED IN WHOLE OR IN PART AS THE BASIS FOR THE MANUFACTURE OR SALE OF ITEMS WITHOUT WRITTEN PERMISSION.
COPYRIGHT © 1977, DIGITAL EQUIPMENT CORPORATION"

digital

USED ON OPTION/MODEL
11/45

DRN.	D. FONTAINE	2-4-72
CHK'D	D. FONTAINE	2-4-72
ENG.	G. POTTER	2-24-72
PROD.	A. HIRSCH	2-24-72

TITLE
+5V REGULATOR

SIZE	CODE	NUMBER	REV.
B	DD	H744-Ø	S

SHEET 2 OF 4

SIZE	CODE	NUMBER	REV.
B	DD	H744-Ø	S

DRAWING NO.	NO. OF SHTS	PART NO.	DESCRIPTION	REVISIONS	
D-AH-H744-Ø-5			ASSY DRILLING/HOLE LAYOUT	Y	Y
E-UA-H744-Ø-Ø	1		UNIT ASSY	W	W1
D-CS-H744-Ø-1	1		CIRCUIT SCHEMATIC	W	W1
B-MH-H744-Ø-6	4		MODULE ECO HISTORY	AC	AE
		5009725	ETCHED BOARD	H	H
A-SP-H744-Ø-3			TEST PROCEDURE	REF	
A-SP-H744-Ø-8			MFG SPEC	REF	
D-PS-1210737-Ø-Ø	1		HEAT SINK	REF	
D-IA-5309756-Ø-Ø	1		REGULATOR BRK'T	REF	
C-MD-5309760-Ø-Ø	1		COMPONENT COVER	REF	
C-MD-5309759-Ø-Ø	1		CAPACITOR STRAP	REF	
A-PI-3700074-Ø-Ø	2		PACKAGING INSTRUCTION	REF	
A-PS-9905211-Ø-Ø	2		OUTER CARTON	REF	
A-PS-9905212-Ø-Ø	2		INNER PACKAGING	REF	
C-IA-7412388-Ø-Ø			2.5 CAP HOLDER	REF	
C-MD-7419952-Ø-Ø			COMPONENT COVER	REF	

NOTES:

REVISIONS		
REV.		R
CHG NO.	00017	00019
DATE	2-77	

"THIS DRAWING AND SPECIFICATIONS, HEREIN, ARE THE PROPERTY OF DIGITAL EQUIPMENT CORPORATION AND SHALL NOT BE REPRODUCED OR COPIED OR USED IN WHOLE OR IN PART AS THE BASIS FOR THE MANUFACTURE OR SALE OF ITEMS WITHOUT WRITTEN PERMISSION.
COPYRIGHT © 1977, DIGITAL EQUIPMENT CORPORATION"

digital

USED ON OPTION/MODEL	
11/45	

DRN.	D. FONTAINE	2-4-72
CHK'D	D. FONTAINE	2-4-72
ENG.	G. POTTER	2-24-72
PROD.	A. HIRSCH	2-24-72

TITLE +5V REGULATOR

SIZE	CODE	NUMBER	REV.
B	DD	H744-Ø	S

SHEET 3 OF 4

SIZE	CODE	NUMBER	REV.
B	DD	H744-Ø	S

DRAWING NO.	NO. OF SHTS	PART NO.	DESCRIPTION	REVISIONS	
D-AH-H744-Ø-5			ASSY DRILLING/HOLE LAYOUT	Y	Y
E-UA-H744-Ø-Ø	1		UNIT ASSY	V	V1
D-CS-H744-Ø-1	1		CIRCUIT SCHEMATIC	W	W1
B-MH-H744-Ø-6	4		MODULE ECO HISTORY	AB	AE
		5009725	ETCHED BOARD	H	H
A-SP-H744-Ø-3			TEST PROCEDURE	REF	
A-SP-H744-Ø-8			MFG SPEC	REF	
D-PS-1210737-Ø-Ø	1		HEAT SINK	REF	
D-IA-5309756-Ø-Ø	1		REGULATOR BRK'T	REF	
C-MD-5309760-Ø-Ø	1		COMPONENT COVER	REF	
C-MD-5309759-Ø-Ø	1		CAPACITOR STRAP	REF	
A-PI-3700074-Ø-Ø	2		PACKAGING INSTRUCTION	REF	
A-PS-9905211-Ø-Ø	2		OUTER CARTON	REF	
A-PS-9905212-Ø-Ø	2		INNER PACKAGING	REF	
C-IA-7412388-Ø-Ø			2.5 CAP HOLDER	REF	
C-MD-7419952-Ø-Ø			COMPONENT COVER	REF	

NOTES:

REVISIONS		
REV.		R
CHG NO.	00016	00019
DATE		2-77

"THIS DRAWING AND SPECIFICATIONS, HEREIN, ARE THE PROPERTY OF DIGITAL EQUIPMENT CORPORATION AND SHALL NOT BE REPRODUCED OR COPIED OR USED IN WHOLE OR IN PART AS THE BASIS FOR THE MANUFACTURE OR SALE OF ITEMS WITHOUT WRITTEN PERMISSION.
COPYRIGHT © 1977, DIGITAL EQUIPMENT CORPORATION"

digital

USED ON OPTION/MODEL	
11/45	

DRN.	D. FONTAINE	2-4-72
CHK'D	D. FONTAINE	2-4-72
ENG.	G. POTTER	2-24-72
PROD.	A. HIRSCH	2-24-72

TITLE: +5V REGULATOR

SIZE	CODE	NUMBER	REV.
B	DD	H744-Ø	S

SHEET 4 OF 4

This drawing and specifications herein are the property of Digital Equipment Corporation and shall not be reproduced or copied or used in whole or in part as the basis for the manufacture or sale of items without written permission © 1975 DIGITAL EQUIPMENT CORP.

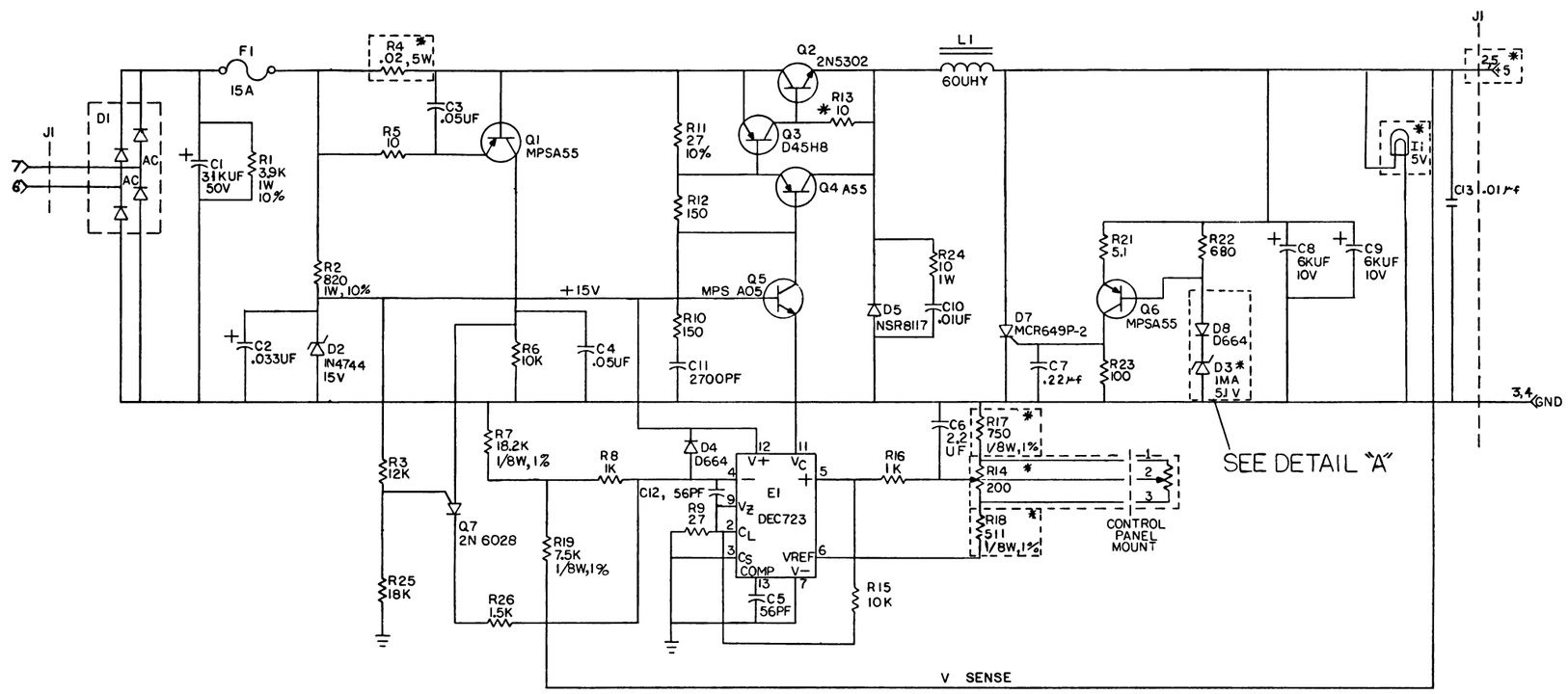

*FUSIBLE RESISTOR

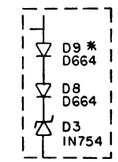

DETAIL A
FOR YA VARIATION ONLY

[*] FOR YA VARIATION COMPONENT VALUES ARE AS FOLLOWS:
R4 - .06 5W
R14 - 1K 10 TURN
R17 - 300 1/8W 1%
R18 - 150 1/4W 5%
D3 - IN754
I1 - 15V
J1-2,5 - +2.0-8.0V

* D9 - D664 ADDED FOR YA VARIATION ONLY

UNLESS OTHERWISE INDICATED:
RESISTORS ARE 1/4W, 5%

QTY	REF DESIGNATION	DESCRIPTION	PART NO.	ITEM NO.
		PARTS LIST		
	ETCH BOARD REV	F H		

DEC NO.	EIA NO.	DEC NO.	EIA NO.
IN964A	SAME	MPSA55	
D664	IN3606	2N5302	
MCR649P-2		D45H8	
IN751A	SAME	MPSA05	
IN4744	SAME		
NSR8117			
2N6028			

SEMICONDUCTOR CONVERSION CHART

CHK	CHANGE NO.	REV
	H744-00001	E

REVISIONS

DRN.	Roger V. Desiette	DATE	11-2-71
CHK'D.	Nancy Moore	DATE	11-3-71
ENG.		DATE	1/7/72
PROJ. ENG.		DATE	1/7/72
PROJ.		DATE	1/13/72
NEXT HIGHER ASSY			
SCALE			
SHEET	1 OF 1		

digital EQUIPMENT CORPORATION MAYNARD MASSACHUSETTS

TITLE 5V REGULATOR

SIZE	CODE	NUMBER	REV
D	CS	H744-0-1	Y

DIST.

SIZE	CODE	NUMBER	REV
D	CS	H744-0-1	Y

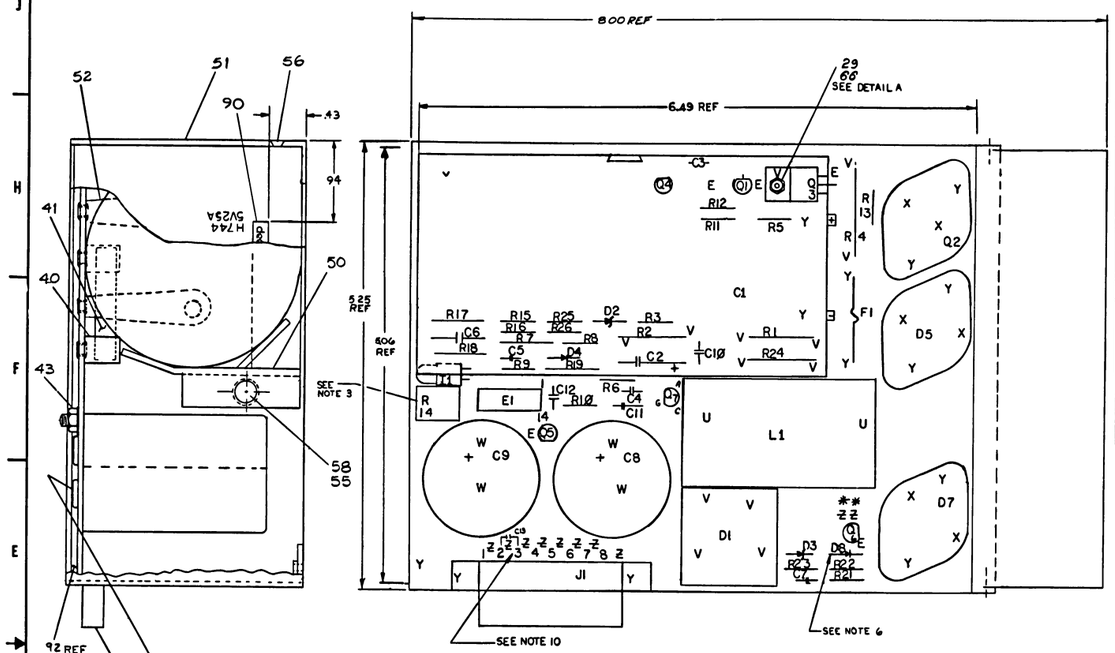

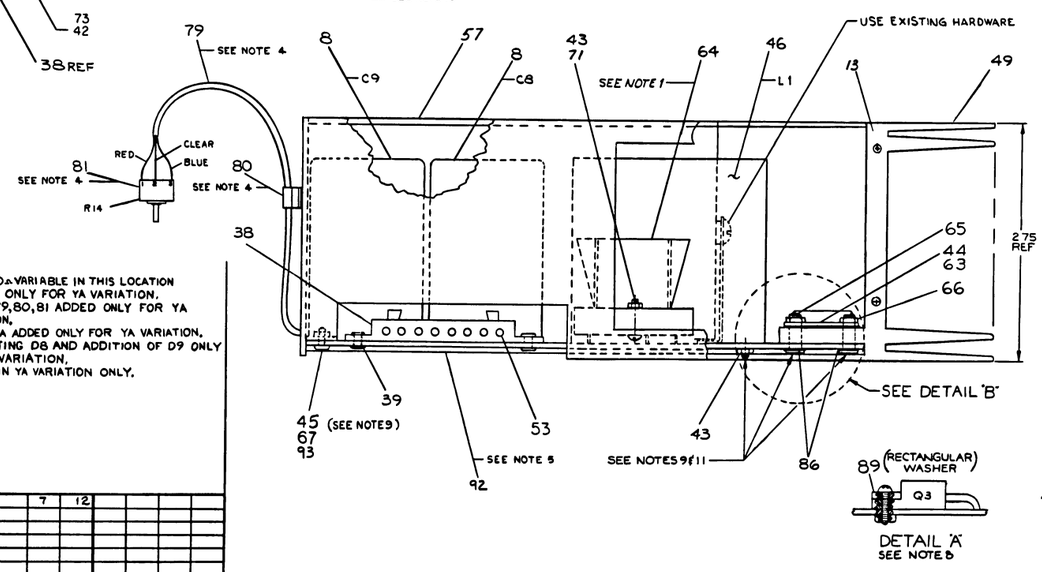

NOTES:
3. R14 - 200Ω VARIABLE IN THIS LOCATION DELETED ONLY FOR YA VARIATION.
4. ITEMS #79, 80, 81 ADDED ONLY FOR YA VARIATION.
5. ITEM #92 A ADDED ONLY FOR YA VARIATION.
6. RELOCATING D8 AND ADDITION OF D9 ONLY FOR YA VARIATION.
7. USE D9 IN YA VARIATION ONLY.

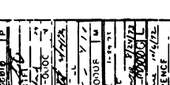

DETAIL "A"
SEE NOTE 8

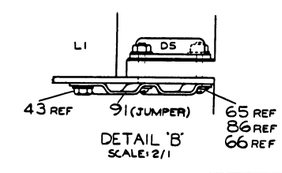

DETAIL "B"
SCALE: 2/1

NOTES:
1. APPLY ITEM #63 (COMPOUND) BETWEEN TRANSISTOR (Q2), DIODES (D5, D7) AND ITEM #44 (WASHER) ALSO BETWEEN ITEM #44 (WASHER) AND HEAT SINK (ITEM #49). ALSO APPLY ITEM #63 (COMPOUND) BETWEEN ITEM #9 (DIODE BRIDGE) AND ITEM #64 (HEAT SINK BRIDGE).

NOTES CONT.

NOTE 8:
(1) Q3 SCREW HEAD SHOULD BE ON TOP OF FLAT RECTANGULAR WASHER AS SHOWN. APPLY 6 INCH LBS. OF TORQUE WHEN SECURING Q3 TO CKT. BOARD BEFORE SOLDERING.

NOTE 9: TORQUE APPLICATION
(1) APPLY 12 INCH LBS. OF TORQUE TO THE SCREWHEAD OF #4 HARDWARE EXCEPT Q3.
(2) APPLY 12 INCH LBS OF TORQUE TO #6 HARDWARE ON L1
(3) APPLY 16 INCH LBS OF TORQUE TO ALL #6 AND #10 HARDWARE EXCEPT ON L1.
(4) ALL HARDWARE TO BE TORQUED BEFORE SOLDERING

NOTE 10
INSERT C13 INTO ETCH PAD HOLES CONNECTED TO J1 TERMINALS, 2-3.

NOTE 11:
MIN TORQUE REQUIRED FOR QC INSPECTION.
8 INCH LBS FOR #4 HARDWARE,
12 INCH LBS FOR #6 AND #10 HARDWARE

*SEE NOTE 7

QTY	QTY	REF DESIGNATION	DESCRIPTION	PART NO.	ITEM NO.
1	1	R22	RES 680 1/4W 5%	1301424	69
1	1		PACKING INSTRUCTIONS	API 3700074 0	70
1	1		SCR, PHL PAN HD #6 32 x 5/8 LG	9006025-1	71
1	Ø	I1	15 VOLT LAMP	1209169	72
4	4		LOCKWASHER #10 INT	9006635	73
A/R	A/R		~~DEPOSITED COMPOUND~~	~~9000867~~	74
A/R	A/R		~~TEF TUBING~~	~~9107302-11~~	75
A/R	A/R		~~TEF TUBING~~	~~9107302-21~~	76
1	1	Q4	~~TRANSISTOR 2N6259~~	~~1310556~~	77
A/R	A/R		~~SHRINK SLEEVING~~	~~9107302-07~~	78
1	Ø	2 IN	WIRE, MICRODOT	1700014	79
1	Ø		CLAMP, CABLE	9007079	80
1	Ø	R14	POT, 10 TURN, 1KΩ	1309532-04	81
1	Ø	R17	RES, 500Ω 1/4W 5%	1301425	82
1	Ø	R18	RES, 150Ω 1/4W 5%	1300250	83
1	Ø	R4	RES, 06Ω 5W 3%	1310876-02	84
1	Ø	D3	DIODE ZENER IN754	1109991	85
6	6	-	WASHER, INT TOOTH #4	9006632	86
1	1	C7	CAP .22μf 50V	1010274	87
1	1	R13	RES 10 1/4W 5% FUSIBLE	1312496	88
1	1	-	WASHER, RECTANGULAR	9009769	89
1	1	-	DECAL (H744)	ADC7416945-1-0	90
1	1	-	JUMPER	1214074	91
1	Ø	-	COVER, BOTTOM	7419952	92
2	Ø	-	WASHER, FIBER	9008848	93

744-YA	744-ØØ	REF DESIGNATION	DESCRIPTION	PART NO.	ITEM NO.
Ø	1	I1	5 VOLT LAMP	12-09219-1	68
2	2		L' WASHER #4	9006632	67
7	7		NUT KEPS #4-40	9006597	66
6	6		SCR PHL PAN HD #4 40 x 3/16 LG	9008033-1	65
1	1		HEAT SINK BRIDGE	1210907	64
A/R	A/R		COMPOUND THERMAL JOINT	8008268	63
1	1	R26	RESISTOR 1.5K 1/4 W 5%	1300381	62
1	1	R19	RESISTOR 7.5K 1/8W 1%	1305322	61
1	1	R3	RESISTOR 1EK 1/4W 5%	1300488	60
1	1	Q7	TRANSISTOR, UNJUNCTION ERSRE	1310877	59
1	1		SCR PHL PAN HD #6-32 X 1/4 LG	9006020-1	58
1	Ø		COVER	C-MD-5309722-00	57
1	1		SCR PHL FLT HD #6-32 x 3/16 LG	9008020-2	56
1	1		WASHER, LOCK #6	9006633	55
~~1~~	~~1~~	~~Q4~~	~~SCR PHL FLT HD #6 x 3/16 LG~~	~~9008020-2~~	~~54~~
8	8		CONTACT FEMALE	1209456	53
2	2		STRAP, CAPACITOR	C-MD-5309759-04	52
1	1		BRACKET, REGULATOR	D IA-5309756-09	51
1	1		HOLDER, CAPACITOR 2.5	C IA-12388 0-0	50
1	1		HEAT SINK REGULATOR	D PS 1210737 0 0	49
2	2	C5, C12	CAP 56 PF	1000012	48
1	1	R24	RESISTOR 10 1W	1300171	47
1	1	L1	REACTOR 60 μH Y MMC4347	1410850	46
2	2		SCR, PHL PAN HD #4-40 1/4 LG	9008301-1	45
3	3		WASHER, INSULATOR	9006721	44
3	3		NUT, KEPS #6-32	9008185	43
4	4		SCR #10-32 x .31 SLOTTED PAN HD	9009669-01	42
1	1	F1	FUSE 15 AMP	1213237-01	41
2	2		FUSE CLIP	9007203	40
6	6		EYELET GS-4-5	9009000	39
1	1	J1	MATE-N-LOCK CONN, 8 PIN	1209340	38
1	1	E1	INTEGRATED CIRCUIT DSC 723C	1910418	37
1	1	Q5	TRANSISTOR A05	1510705	36
1	1	Q3	TRANSISTOR D45H8	1510708-1	35
3	3	Q1, Q6, Q4	TRANSISTOR MPSA55 MOT	1510706	34
1	1	Q2	TRANSISTOR 2N6302	1510196	33
Ø	1	R14	RES VARIABLE 200	1510852	32
1	1	R21	RES 5.1 1/4W 5%	1309422	31
1	1	R23	RES 100 1/4W 5%	1300229	30
1	1		SCR, PPH #4-40 X 3/8	9006011-1	29
1	1	R11	RES 27 1/4W 10%	1301420	28
Ø	1	R17	RES 750 1/8W, 1%	1302955	27
1	1	R9	RES 27 1/4W 5%	1301522	26
1	1	R7	RES 18.2K 1/8W, 1%	1303412	25
2	2	R8, R16	RES 1K 1/4W 5%	1300305	24
Ø	1	R18	RES 511 1/8W 1%	1302411	23
1	1	R25	RES 18K 1/4W 5%	1302465	22
2	2	R6, R15	RES 10 K 1/4W 5%	1300479	21
Ø	1	R4	RES .02 5W 3%	1310876	20
1	1	R2	RES 820 1W 10%	1300358	19
1	1	R1	RES 3.9K 1W 10%	1302927	18
1	1	R5	RES 10 1/4W 5%	1301317	17
2	2	R12, R10	RES 150 1/4W 5%	1300250	16
Ø	1	D3	DIODE ZENER 1 MA. 5.1V	1110925	15
1	1	D7	SCR MCR 649P-2	1109465	14
4	4		SCR, PFH #4 X 5/16 LG SELF TAP	9009142	13
1	1	D5	DIODE PWP NSP 5117	1110715	12
3	2	D4, D8 D9*	DIODE PWP D664	1100114	11
1	1	D2	DIODE ZENER IN4744	1105648	10
1	1	D1	DIODE BRIDGE	1110714	9
2	2	C8, C9	CAP 6K μf 10V	1010704	8
1	1	C1	CAP 31 K μf 50V	1010858	7
2	2	C4, C3	CAP .05 μf 25V	1001774	6
1	1	C2	CAP .033 μf 100V 10%	1000050	5
1	1	C11	CAP 2700PF 100V 5% DM	1001937	4
2	2	C10, C13	CAP .01 μF 100V 20% DISC	1001610	3
1	1	C6	CAP 2.2 μF, 20V, 10%	1002627	2
1	1		ETCHED CIRCUIT BOARD	5009725	1
			ASSY/DRILLING HOLE LAYOUT	D-AH-H744-Ø-5	
			X-Y COORDINATE HOLE LOCATION	X-CO-H744-Ø-4	REF
			MODULE ECO HISTORY	D MH-H744-Ø-Ø 6	REF
			CIRCUIT SCHEMATIC	D-CE-H744-Ø-1	REF

PARTS LIST

μA 723C	7	12	
IC TYPE	GND	+6V	
GND AND 5V ARE USUALLY PIN 7 AND 14 RESPECTFULLY EXCEPTIONS ARE STATED ABOVE			
IC PIN LOCATIONS			

ITEM NO	WIRE	FROM PT	TO PT
JUMPER LIST			

FIRST USED ON OPT/MOD	
D-UA-H742A-Ø-Ø	

DEC NO.	EIA NO	DEC NO	EIA NO
D664	1N3606		
IN4744			

SEMICONDUCTOR CONVERSION CHART

ETCH BOARD REV H

EQUIPMENT CORPORATION
WESTBORO, MASSACHUSETTS

TITLE 5V REGULATOR

SCALE 2/1 SHEET 1 OF

CODE E UA H744- Ø-Ø REV AA

digital EQUIPMENT CORPORATION MAYNARD MASSACHUSETTS

DRAWING DIRECTORY

"THIS DRAWING AND SPECIFICATIONS, HEREIN, ARE THE PROPERTY OF DIGITAL EQUIPMENT CORPORATION AND SHALL NOT BE REPRODUCED OR COPIED OR USED IN WHOLE OR IN PART AS THE BASIS FOR THE MANUFACTURE OR SALE OF ITEMS WITHOUT WRITTEN PERMISSION. COPYRIGHT © , DIGITAL EQUIPMENT CORPORATION"

CUSTOMER PRINT SET INDEX

THIS IS PRINT SET

SEQUENCE		SEQUENCE	
DRAWING DIRECTORY	B-DD-H745-Ø	MFG. SET	
CIRCUIT SCHEMATIC	D-CS-H745-Ø-1	TEST PROCEDURE	A-SP-11/45 TA-2
UNIT ASS'Y	E-UA-H745-Ø-Ø	MFG. SPEC.	A-SP-H745-Ø 8
		PACKAGING INSTRUCTION	A-PI-3700074-0-0

UNIT VARIATIONS

VAR	TITLE	PRINT SET H745-1			
H745	-15V REGULATOR	X			

REVISIONS		
DATE	CHG. NO.	REV
	H745-16	K
	H745-17	L
	H745-18	M
9-76	H745-19	N
10-76	H745-20	P
7-77	H745-22	R
10-78	H745-MLØ23	S

USED ON OPTION/MODEL	
11/45	
SHEET 1	OF 2

DRN. D.FONTAINE	DATE 2-7-72	TITLE -15V REGULATOR	
CHK'D. J GAUDETTE	DATE 2-17-72		
PROJ ENG. G.POTTER	DATE 2-25-72		
PROD. A.HUSCH	DATE 2-25-72	SIZE B / CODE DD / NUMBER H745-Ø	REV S
FIELD SERV. A. ZINS	DATE 2-25 72	DIST	

DEC 16-13951-1-C2-16-8072

FIND NO.	DRAWING NO.	DESCRIPTION	TYPE
1	E-UA-H745-Ø-Ø	UNIT ASSY	E/M
	D-CS-H745-Ø-1	CIRCUIT SCHEMATIC	E
	D-AH-H745-Ø-5	ASSY/DRILLING HOLE LAYOUT	E
	B-MH-H745-Ø-6	MODULE ECO HISTORY	E
	A-SP-H745-Ø-8	MFG SPEC	E
	A-SP-11/45-TA-2	TEST PROCEDURE	E
	D-PS-1210737-0-0	HEAT SINK	M
	D-IA-5309756-0-0	REGULATOR BRACKET	M
	C-IA-5309761-0-0	2-5 CAP BRACKET	M
	C-MD-5309759-0-0	CAPACITOR STRAP	M
2	A-PI-3700074-0-0	PACKAGING INSTRUCTIONS	M
	A-PS-9905211-0-0	OUTER CARTON	M
	A-PS-9905212-0-0	INNER PACKAGE	M

FIND NO.	DRAWING NO.	DESCRIPTION	TYPE

TYPE: E ELECTRICAL
M MECHANICAL
E/M ELECTRO/MECHANICAL

digital

TITLE -15V REGULATOR

SHEET 2 OF 2 | SIZE B | CODE DD | NUMBER H745-Ø | REV S

DRR 108A

This drawing and specifications herein are the property of Digital Equipment Corporation and shall not be reproduced or copied or used in whole or in part as the basis for the manufacture or sale of items without written permission. COPYRIGHT © 1976
DIGITAL EQUIP CORP., MAYNARD, MASS.

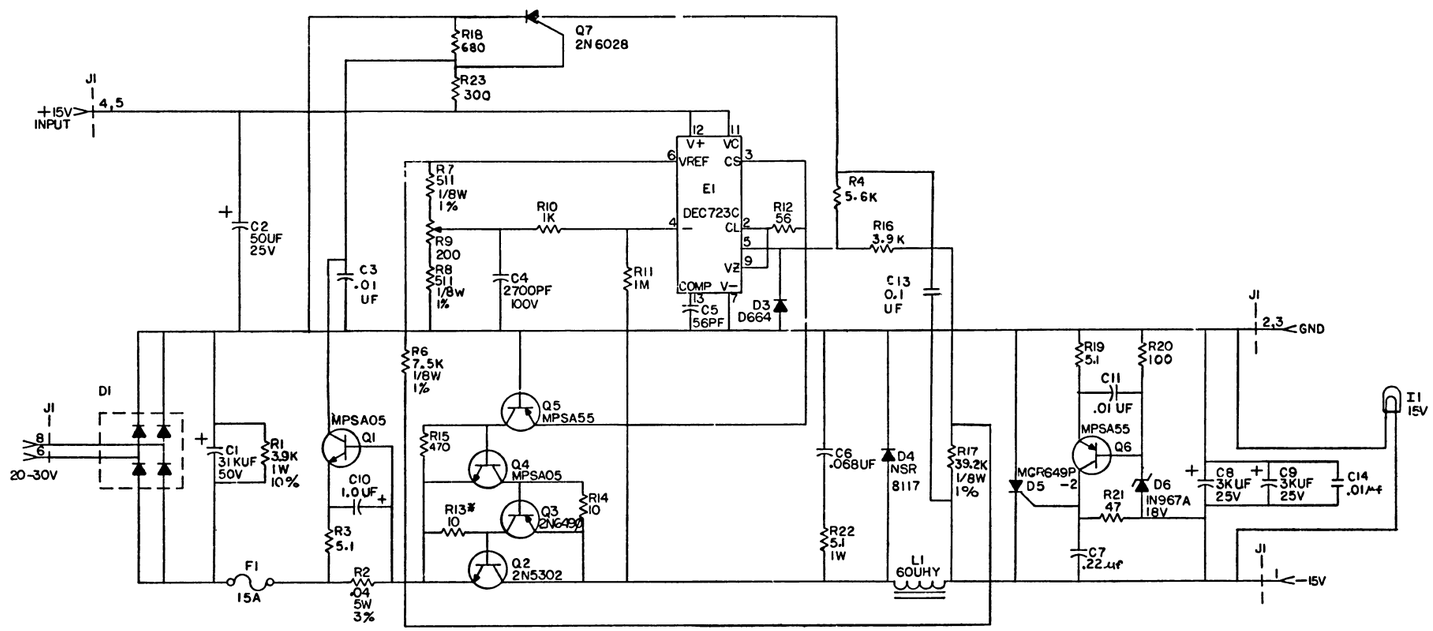

* FUSIBLE
UNLESS OTHERWISE INDICATED:
RESISTORS = 1/4W, 5%

QTY	REF DESIGNATION	DESCRIPTION	PART NO.	ITEM NO
		PARTS LIST		
	ETCH BOARD REV	E		

DEC NO.	EIA NO.	DEC NO.	EIA NO
D664	IN 3606	D45H8	
NSR8117		2N 6028	
MCR649P-2			
IN967A	SAME		
2N 5302			
MPS A05			
MPS A55			

SEMICONDUCTOR CONVERSION CHART

REVISIONS: H745 - 00021 | B | CHANGE NO | REV | CHK

A. BARON 13 NOV 78 H745-ML023 AA

A. BARON

DRN. Roger J Doucette DATE 11-8-71
CHK'D. Annie L Moore DATE 11-9-71
ENG. DATE 11/72
PROJ. DATE 1/2/72
PROD. DATE 1/13/72
NEXT HIGHER ASSY
SCALE
SHEET 1 OF 1

digital EQUIPMENT CORPORATION MAYNARD MASSACHUSETTS

TITLE —15V REG

SIZE D CODE CS NUMBER H745 -Ø-1 AA
DIST

This drawing and specifications, herein, are the property of EMCEE Broadcast Products and shall not be reproduced or copied or used in whole or in part as the basis for the manufacture or sale of apparatus without written permission. D-TI-0-1-0

NOTE:
3. INSERT C14 INTO ETCH PAD HOLES CONNECTED TO J1 TERMINALS 1-2.

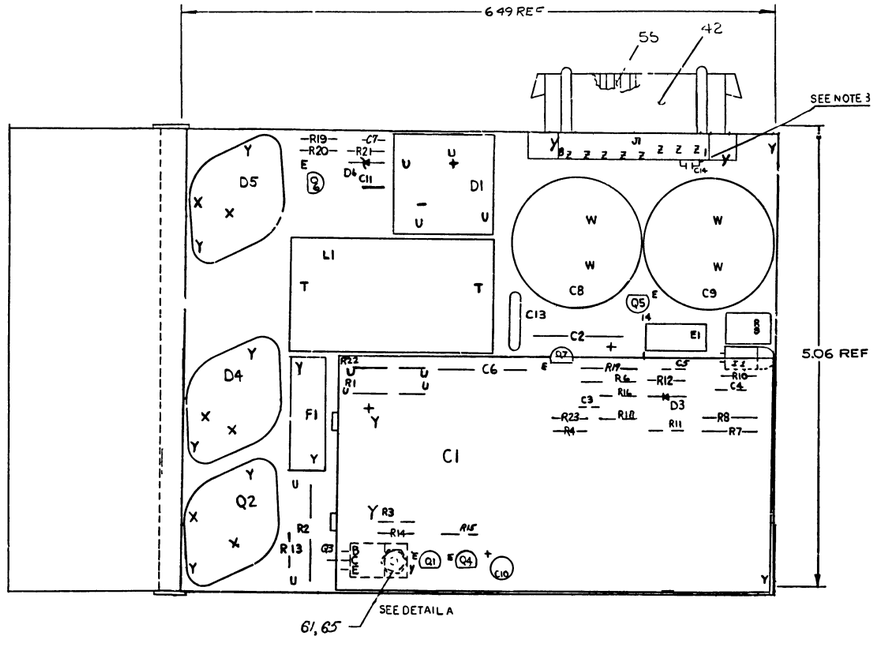

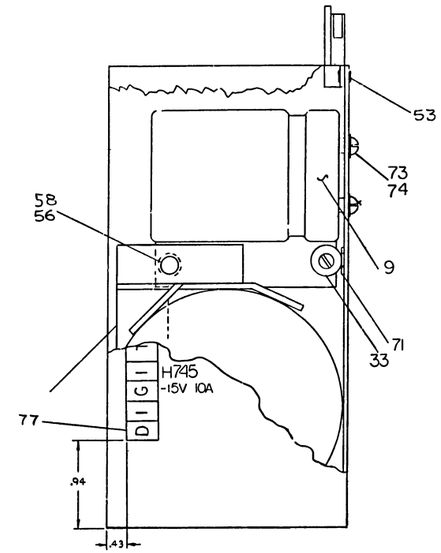

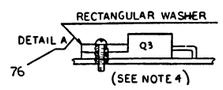

NOTE 4:
Q3 SCREW HEAD SHOULD BE ON TOP OF FLAT RECTANGULAR WASHER AS SHOWN. APPLY 6 INCH LBS OF TORQUE WHEN SECURING Q3 TO CKT. BOARD BEFORE SOLDERING.

NOTE 5: TORQUE APPLICATION
(1) APPLY 8 INCH LBS. OF TORQUE TO ALL #4 HARDWARE EXCEPT Q3.
(2) APPLY 12 INCH LBS. OF TORQUE TO ALL #6 HARDWARE 16 IN LBS. TO #10 HARDWARE
(3) ALL HARDWARE TO BE TORQUED BEFORE SOLDERING.

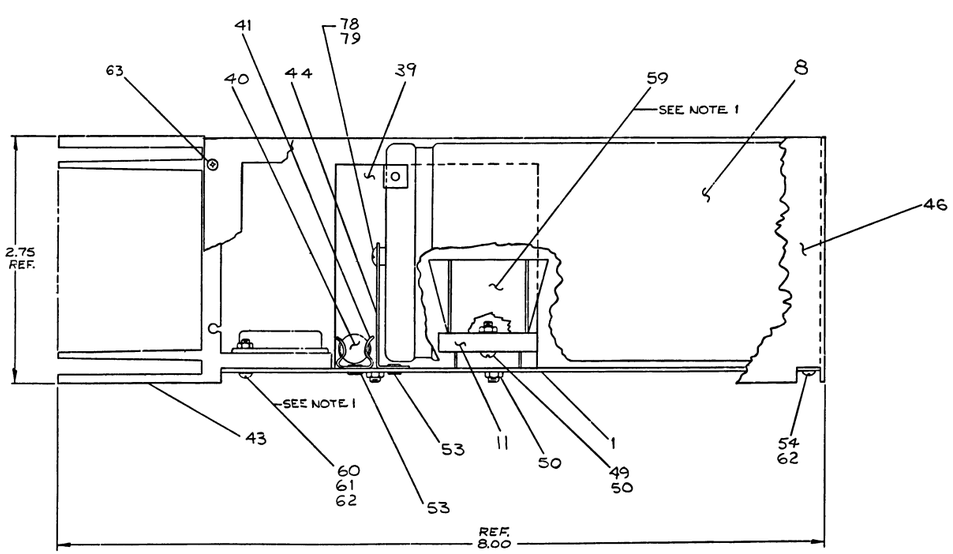

NOTE:
1. APPLY ITEM #51 (THERMAL COMPOUND) BETWEEN TRANSISTOR AND INSULATOR, WASHER (ITEM #52 ALSO BETWEEN WASHER & HEAT SINK FOR Q2 Q4 & D5 ALSO APPLY ITEM #51 (COMPOUND) BETWEEN ITEM #11 (DIODE BRIDGE AND ITEM #59 (HEAT SINK).
2. 1010621 MAY BE SUBSTITUTED FOR C13 (1000030).

QTY.	REF DESIGNATION	DESCRIPTION	PART NO.	ITEM NO.
		ASSY/DRILLING HOLE LAYOUT	D-AM-H745-0-5	70
1		PACKING INSTRUCTIONS	API-3700074-0-0	69
1	R18	RES 680 1/4W 5%	1301424	68
1	P23	RES 700 1/4W 5%	1301425	67
1	C13 (SEE NOTE 2)	CAP. 0.1 UF 100V 20%	000030	66
1		SCR PH #4-40 X 5/16 LG	9006010-1	65
1	I1	LAMP 15V	1214356	64
4		SCR. PFH #4 X 5/16 LG. SELF TAPPING	9009142	63
8		L. WASHER #4	9008632	62
7		NUT KEPS #4-40	9008557	61
8		SCR PHL PAN HD #4-40 X 5/16, LG	9008073-1	60
1		HEAT SINK BRIDGE RECT	1210907	59
1		SCR PHL PAN HD #6 32 X 1/4, LG	9006020-1	58
1		SCR PHL FLT HD #6 32 X 1/4 LG	9006020 02	57
1		WASHER LOCK #6	9006633	56
8		CONTACT FEMALE	1209456	55
2		SCR PHL PAN HD #4-40 X 1/4 LG	9008301 1	54
6		EYELET GS-4 5	9009000	53
3		INSULATOR WASHER	9006721	52
A/R		THERMAL COMPOUND	9006268	51
3		NUT KEPS 6-32	9008185	50
1		SCREW PHL PAN HD 8-32 X 5/8 LG	9006025-01	49
4		~~SCREW PHL FLT HD 8-32 X 1/4 LG~~	~~9006009-2~~	~~48~~
1		~~ADVERTISEMENT~~	~~C-AD-6008900-0-0~~	~~47~~
1		REGULATOR BRKT	D-IA-5308758-0-9	46
1		2.5 HOLDER CAPACITOR	C-IA-7412388 0-0	45
2		STRAP CAPACITOR	C-AD-5308758-0-0	44
1		HEAT SINK	D-PS-1210737-0-0	43
1	J1	CONN MATE-N-LOCK 8 PIN	1208340	42
2		FUSE CLIP	9007233	41
1	F1	FUSE	1213237-01	40
1	L1	REACTOR 80 UHY	1810850	39
1	E1	INTEGRATED CIRCUIT UA723C	1910415	38
1	Q3	TRANSISTOR 2N4918	1512652-01	37
2	Q5 Q6	TRANSISTOR A55	1510708	36
4	Q1 Q4	TRANSISTOR A85	1510705	35
1	Q2	TRANSISTOR 2N302	1510598	34
1	R9	RES VARIABLE 200 Ω, 20%	1310852	33
1	R20	RES 100Ω 1/2 5%	1300229	32
1	R11	RES 1 MEG 1/8 5%	1309595	31
1	R4	RES 5.6 K 1/4 W 5%	1301874	30
1	R16,	RES 3 8K 1/8 5%	1300444	29
2	R18, R3	RES 5 1 1/8 5%	1308422	28
1	R12	RES 56 1/8 5%	1302892	27
1	R21	RES 47 1/8 5%	1300202	26
1	P17	RES 39V2K 1/8W 1%	1305265	25
1	R10	RES 1K 1/8 5%	1300365	24
1	R14	RES 10 1/8 5%	1301317	23
1	R6	RES 7.5K 1/8W 1%	1305322	22
2	R7 R8	RES 511 1/2W 1%	1302411	21
1	R22	RES 5 1 1W 5%	1302136	20
~~1~~	~~R24~~	~~RES 10K 1/8 5%~~	~~1300479~~	~~19~~
1	R2	RES .04Ω 5W 3%	1311362-00	18
1	R1	RES 3 8K 1W 10%	1302927	17
1	D8	DIODE 1N967	1110068	16
1	C5	SCR MCR69P-2	1129165	15
1	D4	DIODE NSP8117	1110715	14
1	D3	DIODE D664	1100114	13
1	Q7	TRANSISTOR UNI JUNCTION 2N6028	1510877	12
1	D1	DIODE BRIDGE	1110714	11
~~1~~	~~C12~~	~~CAP. 5000 200V 10%~~	~~1004312~~	~~10~~
2	C8 C9	CAP 3 0K UF 25V	1010703	9
1	C1	CAP 31K UF 50V	1010758	8
1	C10	CAP 1.0 UF 25V	1010866-01	7
1	C2	CAP 50 UF 25V -10+75%	1001298	6
1	C6	CAP .068 UF 100V 10%	1000092	5
1	C4	CAP 2/100PF 100V 5%	1001837	4
3	C11, C3, C14	CAP .01UF 100V 20%	1001810	3
1	C5	CAP 50K 100V 5%	1000012	2
		ETCHED CIRCUIT BOARD	1309122	1
		DRILLED PCB HOLES	C-AD-H745-0-6	REF
		CIRCUIT SCHEMATIC	D-AD-H745-0-1	REF
		X Y COORDINATE HOLE LOCATION	C-AD-H745-0-5	REF
1	R15	RES 470 1/4W 5%	1300316	81
1		DECAL (H745)	7416945-02	80
2		WASHER INT. TOOTH #10	9006635	79
2		SCREW PAN 10-32 X 3/4 LG	9009669-01	78
1	C7	CAP .22 μf 50V	1010274	77
1		WASHER, RECTANGULAR	9009769	76
1	R13	RES 1Ω 2/4W, FUSIBLE	1312495-00	75
4		LOCKWASHER #10 INT	9006635	74
4		SCR #10-32 X 3/4 SLOTTED PAN HD.	9009669-01	73
				72
1		TRANSIPAD	9008206	71

PARTS LIST

DEC NO.	EIA NO	DEC NO	EIA NO
0669	IN3606		

SEMICONDUCTOR CONVERSION CHART

IC TYPE	GND	+15V
GND AND 5V ARE USUALLY PIN 7 AND 14 RESPECTFULLY EXCEPTIONS ARE STATED ABOVE		

IC PIN LOCATIONS

ITEM NO	AWG	FROM PT	TO PT

JUMPER LIST

1	A BARON	11/15/71	1B
2	A BARON	11/23/71	2B
3	A BARON	9-29-71	3B
4	A BARON	9-29-71	4A
5	H745-00021	11/8/71	E
6	H745-00020	9-23-71	Y
7	H745-00022	9-23-71	W
8	H745-00019	9-23-71	N
9	H745-00018	9-23-71	L
10	H745-00013	9-23-71	P
11	H745-00017	9-23-71	U
12	A BARON	9-23-71	C
13	H745-00016	9-23-71	J
14	A BARON	9-23-71	D
15	H745-00014	9-23-71	V
16	A BARON	9-23-71	T
17	H745-00015	9-23-71	S
18	A BARON	9-23-71	A
19	H745-00012	9-23-71	K
20	H745-00011	9-23-71	M
21	H745-00010	9-23-71	H
22	H745-00009	9-23-71	G
23	H745-00008	9-23-71	F
24	H745-00007	9-23-71	K
25	H745-00006	9-23-71	J
26	H745-00005	9-23-71	H
27	H745-00004	9-23-71	F
28	H745-00003	9-23-71	D
29	H745-00002	9-23-71	C
30	H745-00001	9-23-71	B

EMCEE BROADCAST PRODUCTS EQUIPMENT CORPORATION

TITLE -15 REGULATOR

SIZE	CODE	NUMBER	REV
E	IA	H745-0 0	A3

SHEET 1 OF 1

digital EQUIPMENT CORPORATION MAYNARD MASSACHUSETTS

DRAWING DIRECTORY

"THIS DRAWING AND SPECIFICATIONS, HEREIN, ARE THE PROPERTY OF DIGITAL EQUIPMENT CORPORATION AND SHALL NOT BE REPRODUCED OR COPIED OR USED IN WHOLE OR IN PART AS THE BASIS FOR THE MANUFACTURE OR SALE OF ITEMS WITHOUT WRITTEN PERMISSION. COPYRIGHT © 1974, DIGITAL EQUIPMENT CORPORATION"

CUSTOMER PRINT SET INDEX

THIS IS PRINT SET

SEQUENCE		SEQUENCE
DRAWING DIRECTORY	B-DD-H754-Ø	
+20 VOLT REGULATOR	E-CS-H754-0-1	

UNIT VARIATIONS		PRINT SET
VAR	TITLE	1
H754-0	+20 VOLT REGULATOR	X

REVISIONS		
REV	A	B
CHG. NO.	H754-9	H754-10
DATE	10-75	11-3

USED ON OPTION/MODEL	
SHEET 1 OF 3	

DRN. J.Fleming	DATE 2/21/74	TITLE	
CHK'D. J.Fleming	DATE 2/21/74	+20 VOLT REGULATOR	
PROJ ENG. E. Williams	DATE 3-13-74		
PROD. Jack Hannon	DATE 3-14-74	SIZE B / CODE DD / NUMBER H754-Ø	REV B
FIELD SERV. Walt Aubree	DATE 7/25/74	DIST	

DEC 16-13251-1042-1-A-8672

DRB 106

ELECTRICAL

CUSTOMER PRINT SET 1				MFG. SET	FIND NO.	DRAWING NO.	REV	NO OF SHT	DESCRIPTION	OPTION NO./FILE DATE
X					1	B-DD-H754-Ø	#	3	DRAWING DIRECTORY	
X						E-CS-H754-Ø-1	#	2	+20 VOLT REGULATOR	
						K-CO-H754-Ø-4		-	X-Y COORDINATE HOLE LOCATION	
						D-AH-H754-Ø-5		1	ASSY/DRILLING HOLE LAYOUT	
						B-MH-H754-Ø-6		1	MODULE ECO HISTORY	
						5010531		-	ETCHED CIRCUIT BOARD	
						A-SP-H754-Ø-8		3	MANUFACTURING SPEC	

MEC

CUSTOMER PRINT SET 1				MFG SET	FIND NO.	DRAWING NO.	REV	NO OF SHT	DESCRIPTION	OPTION NO./FILE DATE
X					1	E-CS-H754-0-1	#	2	+20 VOLT REGULATOR	
						D-PS-1210737-0-0		1	HEAT SINK REGULATOR	
						C-IA-5309758-0-0		1	CAPACITOR BRACKET	
					2	D-IA-5409756-0-0		1	BRACKET REGULATOR	
						A-SS-5309756-0-1		1	SILK SCREEN	
						A-SS-5309756-0-2		1	SILK SCREEN	
						A-SS-5309756-0-3		1	SILK SCREEN	

CUSTOMER PRINT SET CODES	
	X = PRINT OF DOCUMENT INCLUDED IN PRINT SET
	C = INCLUDES ALL PRINTS INDICATED ON DOCUMENT
	S = CONFIDENTIAL AUTHORIZED SIGNATURE REQUIRED

TITLE		SIZE	CODE	NUMBER	REV
+20 VOLT REGULATOR	SHEET 2 OF 3	B	DD	H754-Ø	B

DRB 108

DEC 16-(325)-1062-2B-R972

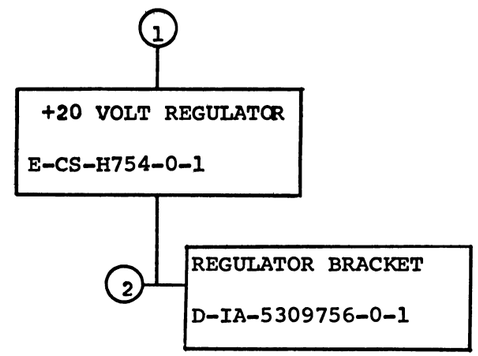

TITLE		SIZE	CODE	NUMBER	REV
+20 VOLT REGULATOR	SHEET 3 OF 3	B	DD	H754-Ø	B

DRB 107
DEC 16—(325)—1062—3—N871

This drawing and specifications, herein, are the property of Digital Equipment Corporation and shall not be reproduced or copied or used in whole or in part as the basis for the manufacture or sale of items without written permission.
COPYRIGHT © 1972 DIGITAL EQUIPMENT CORPORATION

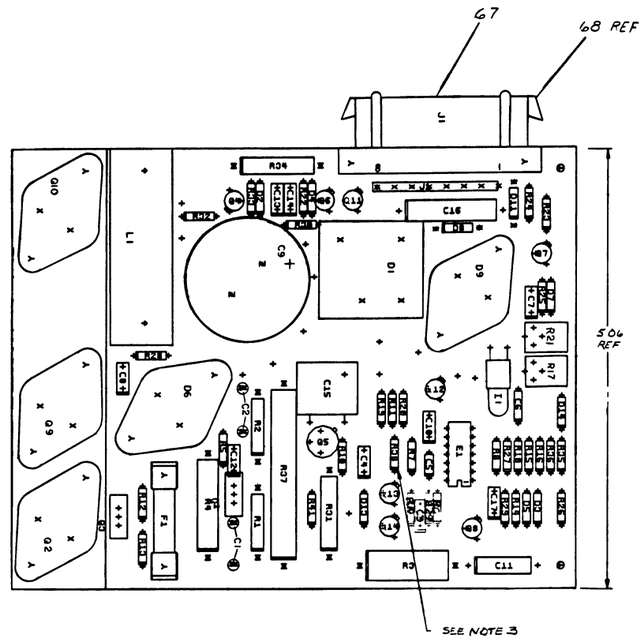

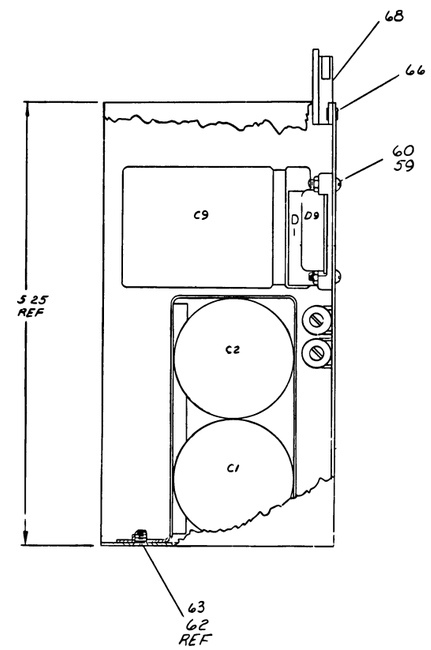

NOTES:
1. APPLY ITEM # 71 (COMPOUND) ON BOTH SIDES OF ITEM #72 (INSULATOR WASHER) FOR Q2, Q9, Q10. ALSO APPLY BETWEEN ITEM # 11 (DIODE BRIDGE D1). AND ITEM # 65 (HEAT SINK, BRIDGE RECT)
2. UNLESS OTHERWISE INDICATED: RESISTORS ARE 1/4 W, ±5%. CAPACITORS ARE 100 V, ±5%.
3. ADD INSULATION (9107256-11) TO BOTH LEADS OF R38 TO AVOID SHORT TO ETCH.
4. APPLY ITEM #71 (COMPOUND) ON BOTH SIDES OF ITEM #94 (MICA WASHER) FOR D6

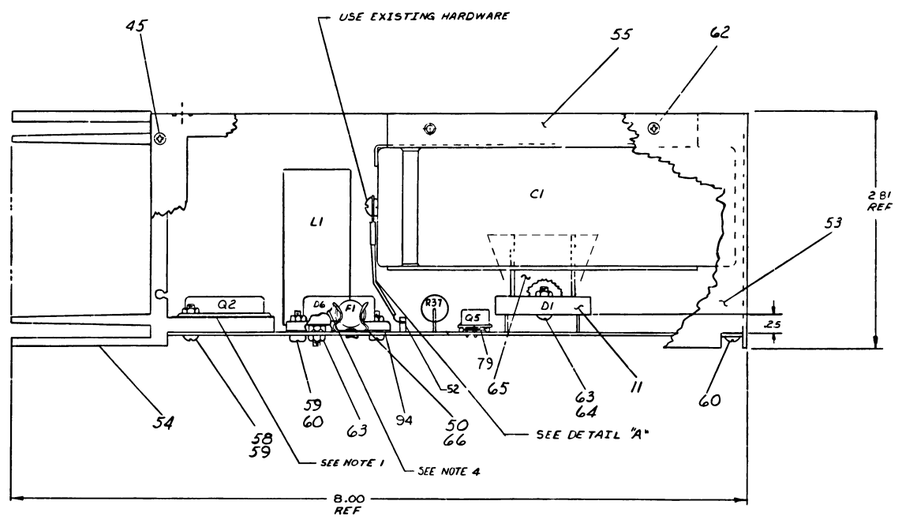

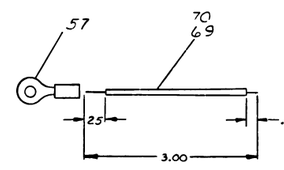

DETAIL "A"
SCALE: NONE
RED WIRE GOES TO POSITIVE TERMINAL
BLK WIRE GOES TO NEGATIVE TERMINAL

DELETED COMPONENTS	
RESISTORS	R9
DIODES	D10, D12

QTY	REF DESIGNATION	DESCRIPTION	PART NO	ITEM NO
1		WASHER, MICA	9009563	94
1	C7	CAP .22 uF 50V	1010274	93
1	Q1	TRANSISTOR 2N4920-1	1509605-1	92
1	R13	RES 27Ω 1/4W 5% FUSIBLE	1312496 01	91
AR		INSULATION	9107256-11	90
1	R39	RES 220 1/4W 5%	1300271	89
1	R37	RES .1 10W 1%	1309106	88
1	R38	RES 1K 1% THERMISTOR	1310071	87
1	C16	CAP 100uF 25V	1022781	86
1	Q10	TRANSISTOR MJ900	1518712	85
1	Q9	TRANSISTOR MJ3000	1511349	84
1	C13	CAP, 180 PF 100V ±5% DM	1000016	83
				82
2	Q4, Q14	TRANSISTOR MPS A05	1510705	81
1	D2	DIODE D003	1100100	80
2	(UNDER Q2 & R6)	TRANSIPAD	9007206	79
1	R31	RES .15Ω 2W 10%	1310147	78
2	C14, C17	CAP, 1000 PF, 100V, 15% DM	1000042	77
1	R22	RES 383Ω 1/8W 1%	1305125	76
2	R33, R8	RES 1.78K 1/8W 1%	1302612	75
1	R11	RES 15K 1/4W 5%	1300096	74
1	R20	RES 470Ω 1/4W 5%	1300816	73
3		WASHER INSULATOR	9006781	72
AR		COMPOUND, THERMAL	9008268	71
AR		WIRE, #18AWG, STRD, 1 PK INS (BLK)	9107380 00	70
AR		WIRE #18AWG STRD 1 PK. INS (RED)	9107380 22	69
1	J1	MATE N LOCK CONN 8 PIN	1208340	68
8		PIN, SOCKET, MATE N-LOCK	1208458	67
4		EYELET GL 4.7	9008132	66
1		HEAT SINK BRIDGE RECTIFIER	1210907	65
1		SCR PHL PAN HD 8 32 X ½	9008024 1	64
4		REPS NUT 8 32 SS	9008185	63
2		SCR PHL FLAT HD 8 32 X 5/16	9008021 2	62
8		~~SCR PHL FLAT HD 8 32 X 3/8~~	~~9008021 3~~	~~61~~
6		SCR PHL PAN HD 4 40 X 3/8	9008011 1	60
10		REPS NUT 4 40	9008037	59
8		SCR PHL PAN HD 4 40 X ¼	9008013 1	58
4		TERMINAL SOLDERLESS, #10	9007830	57
1		~~CAPS~~	~~C 1B 5000250 0 0~~	~~56~~
1		1.5 CAP BRKT	C 1A 5300738 0 0	55
1		HEAT SINK REGULATOR	D PS 1210737 0 0	54
1		BRACKET REG	D 1A 5300758-0 0	53
4		SPLIT LUG	9008135	52
1	Q8	TRANSISTOR 2N6028	15 10877	51
2		FUSE CLIP	9007203	50
1	F1	FUSE 1C AMP	1213237-00	49
1	L1	REACTOR 170 uHY	15 10449	48
1	E1	INTEGRATED CIRCUIT 723	15 10415	47
6	Q7, Q6, Q11, Q12, Q13	TRANSISTOR MPS A55	15 10708	46
4		SCR PHL FLAT HD #4-40 SELF TAPPING	9008142-03	45
1	Q5	TRANSISTOR DEC3500	15 03208	44
1	Q2	TRANSISTOR 2N5038	15 10989	43
1	Q3	TRANSISTOR 2N6491	1513704	42
2	R17, R21	RES VARIABLE 200 ±20% POT	13 10952	41
2	R23, R36	RES 5.1 Ω 5%	13 00422	40
1	R18	RES 237 1/8W 1%	1304857	39
				38
2	R14, R5	RES 1W 5% 27	13 01522	37
1	R10	RES 150 1W 5%	13 00250	36
REF		ASSY/DRILLING HOLE LAYOUT	D-AH-H754-0-6	35
2	R7, R40	RES. 2K 1/4W 5%	1302398	34
2	R6, R19	RES 12K 1W 5%	13 00488	33
6	R15, R25, R30, R24, R35, R41	RES 100 1W 5%	13 00228	32
1	R12	RES 68Ω 1/4W 5% FUSIBLE	1312496-02	31
				30
1	R27	RES 10K, 1/8W 1%	1303312	29
1	R32	RES 33K 1/8W 5%	13 00444	28
1	R16	RES 287, 1/8 W 1%	13-05184	27
1	R29	RES 1M 1W 5%	13 02495	26
1	C11	CAP 2 2 uF 35V 10% S. TANT	10 02431	25
1	R4	RES 5W 3% .03 Ω	1310876-1	24
1	R3	RES 1.5K 5W 5%	13 01897	23
1	R34	RES 47 2W 5%	13 05258	22
1	R28	RES 1 5K 1W 5%	13 00381	21
2	R1 R2	RES 3 8K 1W 10%	13 02927	20
1	R26	RES 10K, 1/4W, 5%	1301317	19
2	D11, D8	DIODE 1N5624	1110420	18
				17
1	D14	DIODE 752A ZENER	1102808	16
1	D6	DIODE MCR 648 P 2	11 00485	15
1	D7	DIODE 1N4708, 24V	11 10856	14
1	D9	DIODE 20 AMP FAST REC	11 10715	13
1	D3	DIODE 1N4744 ZENER, 15V	11 00848	12
1	D1	DIODE MSS 3514	11 10714	11
3	D5 D13 D4	DIODE 1N64	11 00114	10
1	C15	CAP 1UF 100V 20% DISC	1000030	9
1	C9	CAP 2.2K UF 30V G% AL EL.	10 10950	8
4	C3, C8 C4, C10	CAP .01UF 50V 20% DISC.	10 01610-01	7
1	C6	CAP 2700PF 100V 5% DM	10 01637	6
1	C5	CAP 560PF 100V 5% DM	10 00012	5
1	J1	LAMP 28V 40 MA	12 12 339	4
1	C12	CAP 00UF 25V DISC	10 01174	3
4	C1, C2	CAP 5.8KUF 50V G% AL. EL	10 11363	2
1		ETCHED CIRCUIT BOARD	5010531	1
		MODULE ECO HISTORY	B MH-H754-0-6	REF
		X Y COORDINATE HOLE LOCATION	K CO H754-0-4	REF

PARTS LIST

IC TYPE	GND	+5V
GND AND 5V ARE USUALLY PIN 7 AND 14 RESPECTIVELY EXCEPTIONS ARE STATED ABOVE		

IC PIN LOCATIONS

ITEM NO	AWG	FROM PT	TO PT

JUMPER LIST

DEC NO	EIA NO	DEC NO	EIA NO
D664	1N3606		

SEMICONDUCTOR CONVERSION CHART

CHK	CHANGE NO	REV
	H754-00001	B
	H754-00002	C
	H754-00003	D
	H754-00004	E
	H754-00005	F
	H754-00006	H
	H754-00007	J
	H754-00008	K
	H754-00009	L
	H754-00010	M
	H754-00011	N
	H754-00012	P
	H754-00013	R
	H754-00014	S
	H754-00015	T
	H754-00016	U
	H754-00017	U

REVISIONS

ETCH BOARD REV J

DRAWN R. Burton DATE 7-13-72
CHECKED J. Wolf DATE 7-13-72
ENG. A. Baron DATE 7-13-72
PROJ. ENG. A. Baron DATE 7-13-72
PRODUCT ENG. L. Whitcomb DATE 7-13-72
NEXT HIGHER ASSY
SCALE —
SHEET 1 OF 2

digital EQUIPMENT CORPORATION
MAYNARD, MASSACHUSETTS

TITLE + 20 VOLT REGULATOR

SIZE/CODE E | NUMBER CS H754-0-1 | REV. U
DIST

DEC FORM NO. DNE 109

"THIS DRAWING AND SPECIFICATIONS, HEREIN, ARE THE PROPERTY OF DIGITAL EQUIPMENT CORPORATION AND SHALL NOT BE REPRODUCED OR COPIED OR USED IN WHOLE OR IN PART AS THE BASIS FOR THE MANUFACTURE OR SALE OF ITEMS WITHOUT WRITTEN PERMISSION. COPYRIGHT © 1972, DIGITAL EQUIPMENT CORPORATION"

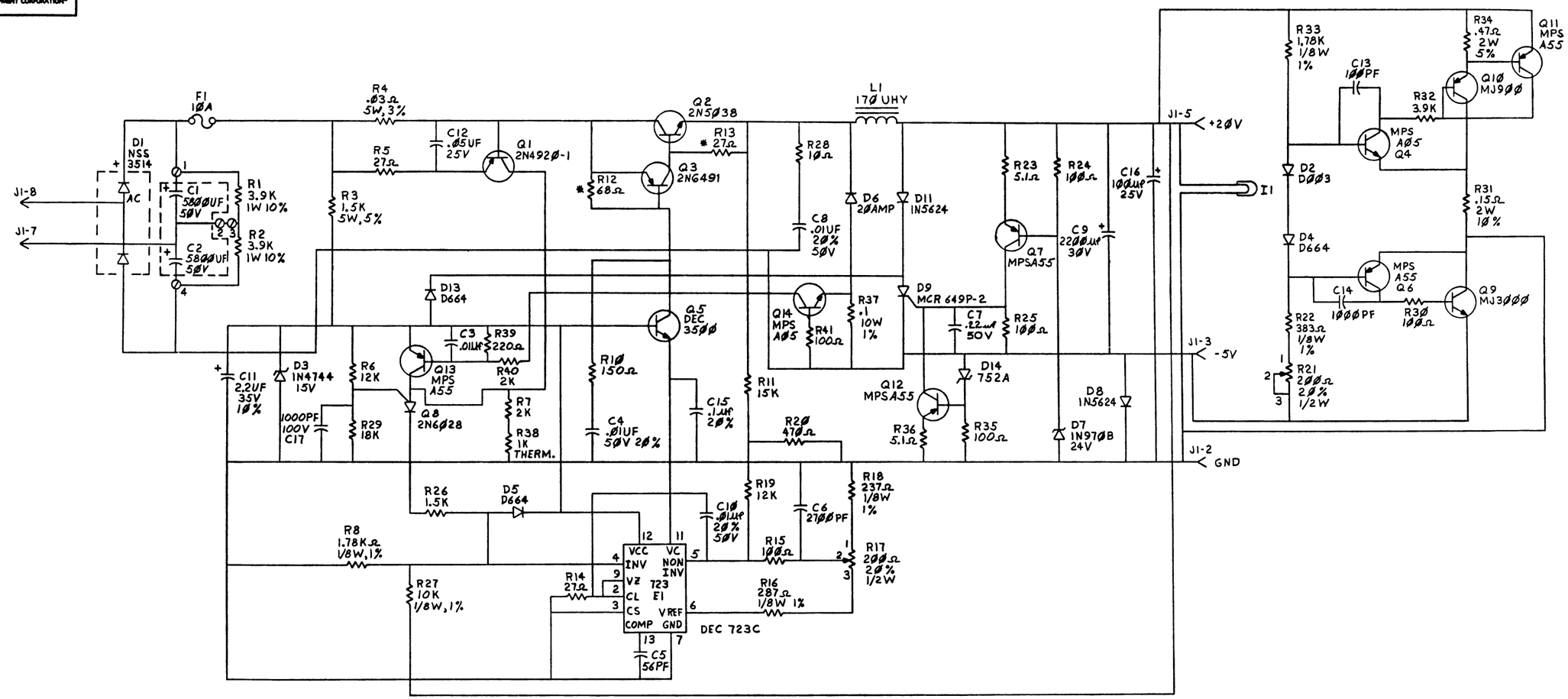

✱ FUSIBLE RESISTOR

DRN. V. BISSONNETTE	8-29-72	FIRST USED ON H754	digital
CHK'D R. VOWLES	12-17-72	TITLE	
ENG. R. BURTON	5-7-73	+2Ø VOLT REGULATOR	
PROJ. ENG. R. BURTON	5-7-73		
PROD. L. BAPTISTE	5-9-73		
NEXT HIGHER ASSY.		SIZE D / CODE CS / NUMBER H754-Ø-1	REV. U
SCALE			
SHEET 2 OF 2		DIST.	

REV. U

"THIS DRAWING AND SPECIFICATIONS, HEREIN, ARE THE PROPERTY OF DIGITAL EQUIPMENT CORPORATION AND SHALL NOT BE REPRODUCED OR COPIED OR USED IN WHOLE OR IN PART AS THE BASIS FOR THE MANUFACTURE OR SALE OF ITEMS WITHOUT WRITTEN PERMISSION. COPYRIGHT © 1974 DIGITAL EQUIPMENT CORPORATION"

NOTES:

1. FOR HAND WIRING INFORMATION SEE WIRE TABLE ON SHEET 3.
2. MATE-N-LOK FIXTURES (ITEM 28) MUST BE USED DURING WAVE SOLDERING OF J2, J3-J12
3. WIRE JUMPERS ON CIRCUIT BOARD ARE PART OF SIGNAL PATHS. THEY ARE NOT FOR OPTIONS
4. PLACE DECALS (ITEM 30, 31 & 36) APPROX. AS SHOWN.
5. POWER DIST. BOARD WITH 7 & 14 AWG WIRES AND BUS BAR IS THE YA VARIATION.
6. PLACE DECAL (ITEM 34) COVERING BOARD ETCH APPROX. AS SHOWN.

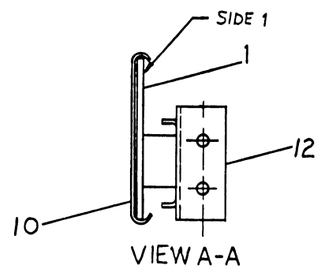

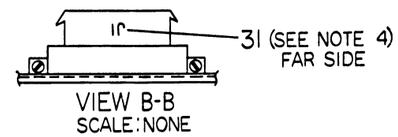

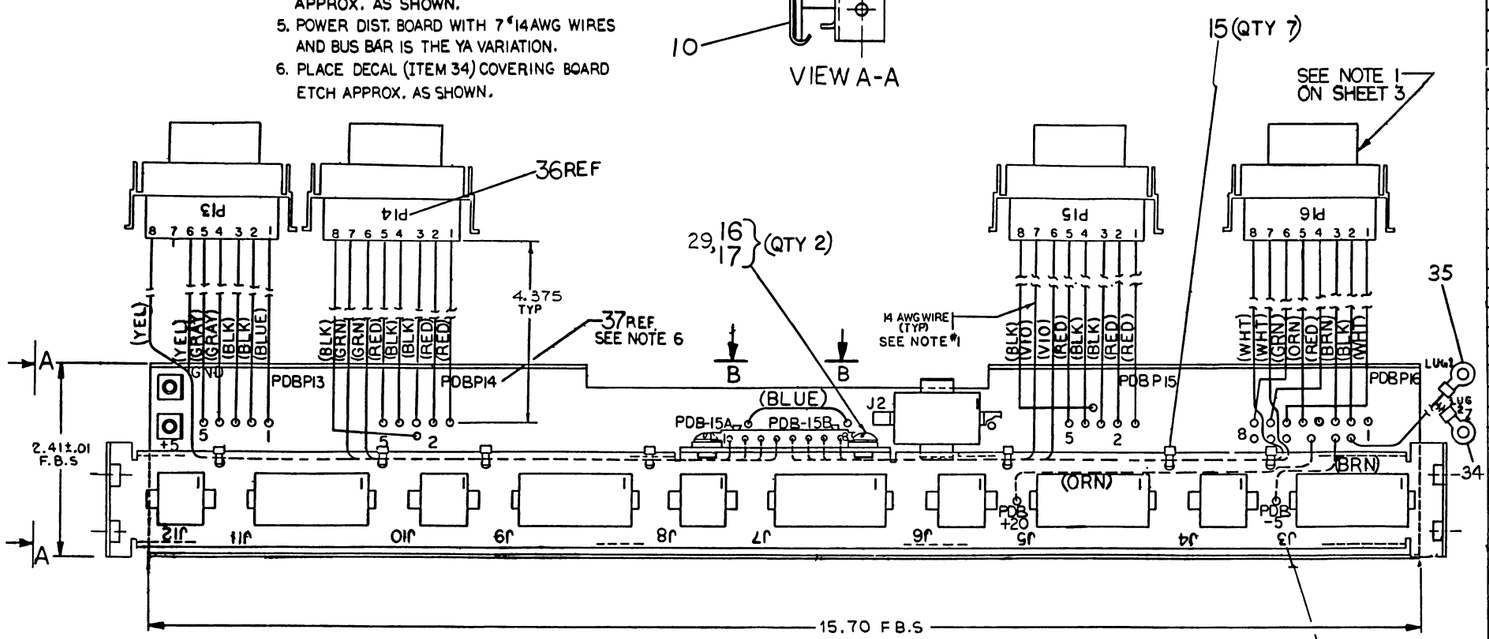

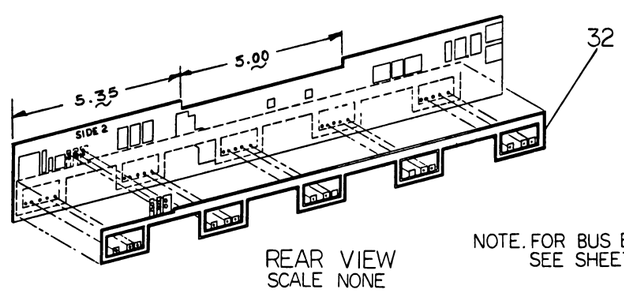

REAR VIEW
SCALE NONE

NOTE. FOR BUS BAR CONNECTIONS SEE SHEET 3 OF 3

QTY YA	QTY	REF. DESIGNATION	DESCRIPTION	PART NO.	ITEM NO.
1	1		ETCHED CIRCUIT BOARD	D-IA-5010863-0-0	1
5	5	J4, J6 J8, J10, J12	CONN, 6 PIN MATE-N-LOK (FEMALE)	1209350-06	2
1	1	J1	CONN, 8 PIN MATE-N-LOK (FEMALE)	1209340-00	3
5	5	J3, J5, J7, J9, J11	CONN, 15 PIN MATE-N-LOK (FEMALE)	1209350-15	4
1	1	J2	CONN, 12 PIN MATE-N-LOK (FEMALE)	1209350-12	5
4	4	P13 THRU P16	CONN, 8 PIN MATE-N-LOK (MALE)	1209340-01	6
31	24	(P13 THRU P16)	PIN, MATE-N-LOK	1209378-01	7
8	8	(J1)	PIN, MATE-N-LOK	1209379-01	8
117	117		PIN, MATE-N-LOK PC MOUNT	1209456-	9
1	1		SHIELD	C-MD-7412192-0-0	10
~~2~~	~~2~~		~~GROUND LUG~~	~~9008150~~	~~11~~
1	1		BRACKET, CONN MTG	D-MD-7411704-0-0	12
2	2		EYELET	9009000	13
2	2		FASTON TAB	9008219-0	14
7	7		CABLE TIE .12 WIDE	9007880	15
2	2		SCREW, PHHD TRUSS 6-32 x .3125	9006021-03	16
2	2		WASHER, INT TOOTH #6	9006633	17
A/R	A/R		WIRE #14 AWG STRD (ORN)	9107370-33	18
A/R	A/R		WIRE #14 AWG STRD (BRN)	9107370-11	19
A/R	A/R		WIRE #14 AWG STRD (RED)	9107370-22	20
A/R	A/R		WIRE #14 AWG STRD (GRY)	9107370-88	21
A/R	A/R		WIRE #14 AWG STRD (BLK)	9107370-00	22
A/R	A/R		WIRE #14 AWG STRD (BLU)	9107370-66	23
A/R	A/R		WIRE #14 AWG STRD (YEL)	9107370-44	24
A/R	A/R		WIRE #14 AWG STRD (GRN)	9107370-55	25
A/R	A/R		WIRE #14 AWG STRD (VIO)	9107370-77	26
A/R	A/R		WIRE #14 AWG STRD (WHT)	9107370-99	27
A/R	REF		MATE-N-LOK FIXTURES	C-IA-9305937-0-0	28
2	2		FLAT WASHER #6	9006666	29
A/R	A/R	J3 THRU J12	DECAL, PWR CONN.	A-DC-7409873-01	30
A/R	A/R	J1	DECAL, PWR CONN.	A-DC-7409873-02	31
1	–		BAR, BUS, BATTERY BACKUP	1213497	32
A/R	A/R		WIRE #14 AWG GRN/YEL	9107777-54	33
1	1		TERMINAL, RING BLU	9007928	34
1	1		TERMINAL, RING YEL	9007926-01	35
A/R	A/R	P13 THRU P16	DECAL, PWR CONN.	A-DC-7409872-2	36
A/R	A/R	P13 THRU P16	DECAL, PWR BOARD	A-DC-7417391-0-0	37

PARTS LIST

FIRST USED ON OPTION MODEL
BA11-K

ETCH BOARD REV. D

IC TYPE	GND	+5V
GND AND 5V ARE USUALLY PIN 7 AND 14 RESPECTIVELY EXCEPTIONS ARE STATED ABOVE		
IC PIN LOCATIONS		

REV.	CHANGE NO.	REVISIONS
L	5410864-00008	J. MERCURI 28 SEP 77
K	5410864-00007	R. WOLF 3-JAN-77
J	5410864-00006	G. POTTER 2-FEB-76
H	5410864-00004	B. MINOR 20-JAN-76
F	5410864-00003	B. MINOR 10-12-74
E	5410864-00002	M. CARRAFIELLO 10-8-74
D	5410864-1	M. CARRAFIELLO 9-15-74
C	ORIGINATED	M. CARRAFIELLO 8-1-74

DEC NO.	EIA NO.	DEC NO.	EIA NO.

SEMICONDUCTOR CONVERSION CHART

		DATE
DRN.	P. Beasley	6/14/74
CHKD.		7/1
ENG.	M. Carrafiello	7/25/74
PROJ. ENG.		7/31/74
PROD.		7/30/74

NEXT HIGHER ASSY: D-UA-BA11-K-Ø

SCALE: NONE

SHEET 1 OF 3

digital

TITLE: POWER DISTRIBUTION BOARD

SIZE	CODE	NUMBER	REV.
D	CS	5410864-0-1	L

DIST.

"THIS DRAWING AND SPECIFICATIONS, HEREIN, ARE THE PROPERTY OF DIGITAL EQUIPMENT CORPORATION AND SHALL NOT BE REPRODUCED OR COPIED OR USED IN WHOLE OR IN PART AS THE BASIS FOR THE MANUFACTURE OR SALE OF ITEMS WITHOUT WRITTEN PERMISSION.
COPYRIGHT © 1974 DIGITAL EQUIPMENT CORPORATION"

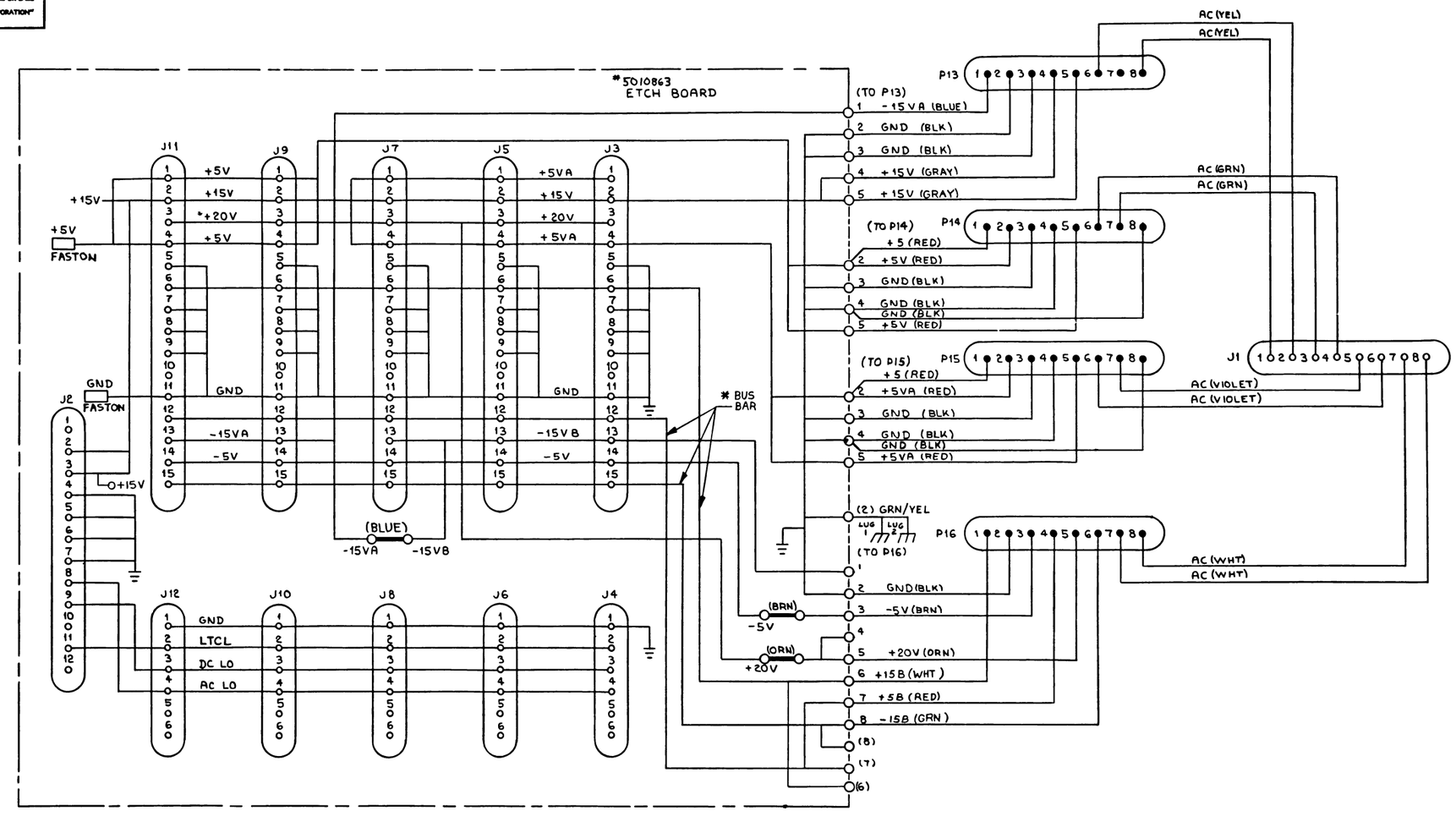

* BUS BAR USED IN THE YA VARIATION ONLY

REVISIONS		
CHK	CHANGE NO	REV

TITLE	SIZE	CODE	NUMBER	REV.
PWR DIST BOARD	D	CS	5410864-0-1	L
SCALE NONE / SHEET 2 OF 3	DIST.			

"THIS DRAWING AND SPECIFICATIONS, HEREIN ARE THE PROPERTY OF DIGITAL EQUIPMENT CORPORATION AND SHALL NOT BE REPRODUCED OR COPIED OR USED IN WHOLE OR IN PART AS THE BASIS FOR THE MANUFACTURE OR SALE OF ITEMS WITHOUT WRITTEN PERMISSION COPYRIGHT © 1974 DIGITAL EQUIPMENT CORPORATION"

WIRE TABLE

ITEM NO	DESCRIPTION AWG	COLOR	FROM CONNECTION	WITH	TO CONNECTION	WITH	LENGTH	SIGNAL NAME
24	14	YEL	J1-1	8	P13-8	7	12.5"	AC/H745
24		YEL	J1-2		P13-6		12.5"	AC/H745
25		GRN	J1-3		P14-7		11"	AC/H744-1
25		GRN	J1-4		P14-6		11"	AC/H744-1
26		VIO	J1-5		P15-7		8.75"	AC/H744-2
26		VIO	J1-6		P15-6		8.75"	AC/H744-2
27		WHT	J1-7		P16-8		11.25"	AC/H754
27		WHT	J1-8	8	P16-7		11.25"	AC/H754
23		BLU	PDBP13-1	SOLDER	P13-1		5"	-15V
22		BLK	PDBP13-2		P13-2			GND
22		BLK	PDBP13-3		P13-3			GND
21		GRY	PDBP13-4		P13-4			+15V
21		GRY	PDBP13-5		P13-5			+15V
20		RED	PDBP14-2		P14-2			+5V
22		BLK	PDBP14-3		P14-3			GND
22		BLK	PDBP14-4		P14-4			GND
20		RED	PDBP14-5		P14-5			+5V
20		RED	PDBP15-2		P15-2			+5V
22		BLK	PDBP15-3		P15-3			GND
22		BLK	PDBP15-4		P15-4			GND
20		RED	PDBP15-5		P15-5			+5V
22		BLK	PDBP16-2		P16-2			GND
19		BRN	PDBP16-3		P16-3			-5V
18		ORN	PDBP16-5		P16-5	7	5"	+20V
23		BLU	PDP-15A		PDB-15B	SOLDER	1.75	-15V
18		ORN	PDBP16-5		PDB +20V		5"	+20V
19		BRN	PDBP16-3	SOLDER	PDB -5V		2"	-5V
33		GRN/YEL	LUG 1	35	PDBP16-2	SOLDER	11"	SAFETY GND
33					LUG 2	34	15"	SAFETY GND
20		RED	PDBP16-7	SOLDER	P16-4	7	5.5"	+5B
20		RED	PDBP15-1		P15-1		5"	+5V
20		RED	PDBP14-1		P14-1		5"	+5V
22		BLK	PDBP15-4		P15-8		5.5"	GND
22		BLK	PDBP14-4		P14-8			GND
27		WHT	PDBP16-6		P16-1			+15B
25	14	GRN	PDBP16-8	SOLDER	P16-6	7	5.5"	-15B

YA VARIATION ONLY.

SEE NOTE 1

BUS BAR CONNECTIONS FOR YA VARIATION

LEVEL A	PDBP16-6 J11,J9,J7,J5,J3 ALL PIN #6	+15V.B
LEVEL B	PDBP16-7 J11,J9,J7,J5,J3 ALL PIN #12	+5V
LEVEL C	PDBP16-8 J11,J9,J7,J5,J3 ALL PIN #15	-15V.B

NOTES:

1. CS REV. K AND EARLIER PWR DISTRIBUTION BOARDS HAD THE GREEN AND WHITE WIRES REVERSED IN COLOR ONLY. THE POINT-TO-POINT CONNECTIONS REMAIN THE SAME.

REVISIONS

CHK	CHANGE NO	REV

TITLE PWR DIST BOARD

SIZE D CODE CS NUMBER 5410864-0-1 REV. L

SCALE NONE SHEET 3 OF 3 DIST.

DEC FORM NO

"THIS DRAWING AND SPECIFICATIONS, HEREIN, ARE THE PROPERTY OF DIGITAL EQUIPMENT CORPORATION AND SHALL NOT BE REPRODUCED OR COPIED OR USED IN WHOLE OR IN PART AS THE BASIS FOR THE MANUFACTURE OR SALE OF ITEMS WITHOUT WRITTEN PERMISSION. COPYRIGHT © 1976, DIGITAL EQUIPMENT CORPORATION"

LEGEND	
NUMBER	VARIATION
7012500-0	120V
7012500-1	240V

WIRE TABLE (7012500-0)

ITEM NO.	DESCRIPTION AWG	COLOR	FROM CONNECTION	WITH	TO CONNECTION	WITH	REMARKS
2	14	BRN	P1-B	—	B	6	AC LINE
2	14	LT BLU	P1-A	—	A	6	AC NEUTRAL
2	14	GRN/YEL	P1-C	—	C	6	AC SAFETY GND

WIRE TABLE (7012500-1)

ITEM NO.	DESCRIPTION AWG	COLOR	FROM CONNECTION	WITH	TO CONNECTION	WITH	REMARKS
2	14	BRN	P1-B	—	B	6	LINE
2	14	LT BLU	P1-A	—	A	6	NEUTRAL
2	14	GRN/YEL	P1-C	—	C	6	AC SAFETY GND

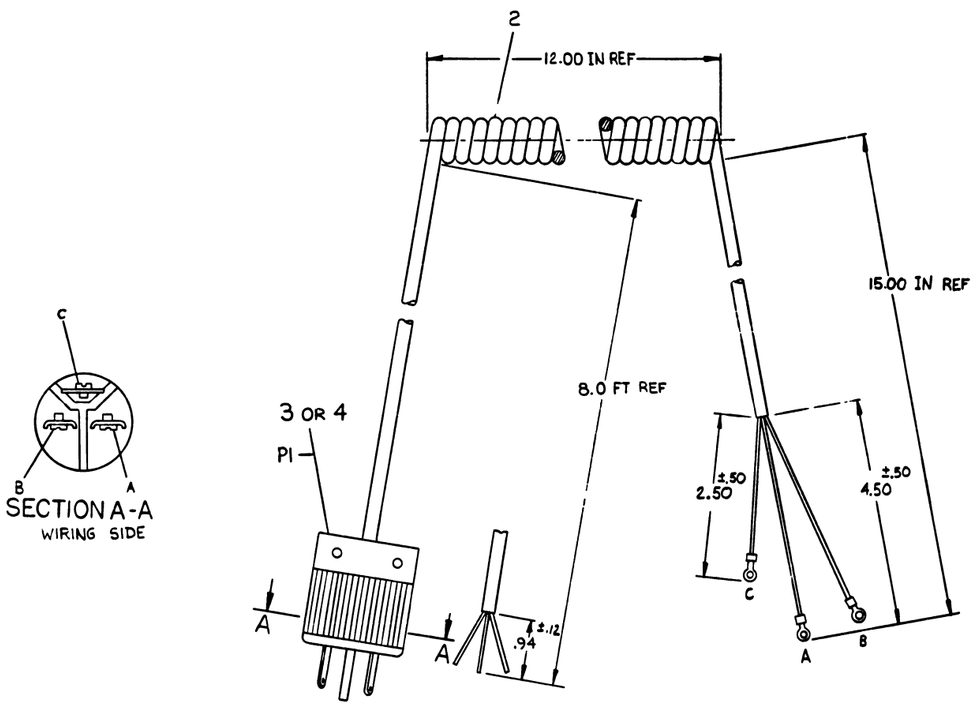

3	3	TERMINAL, RING TONGUE	9007929	6
~~2~~	~~2~~	~~TERMINAL, QUICK CONNECT~~	~~9007919-0~~	~~5~~
1	-	PLUG, 240 V	9008853	4
-	1	PLUG, 120 V	9008938	3
1	1	POWER CORD	1700065-0	2
~~-~~	~~1~~	~~POWER CORD~~	~~1700065-1~~	~~1~~
QUANTITY & VARIATION	7012500-1	7012500-0	DESCRIPTION	DWG./PART NO.	ITEM NO.

UNLESS OTHERWISE SPECIFIED DIMENSIONS ARE IN INCHES

ANGLES 45° 30'	CLASS OF ACCURACY	NOMINAL DIMENSION RANGE INCHES					
SURFACE QUALITY IN MICROINCHES		OVER 0 TO 3	OVER 3 TO 6	OVER 6 TO 12	OVER 12 TO 24	OVER 24 TO 48	OVER 48 TO 96
	CHECK ONLY						
	MINIMUM	±.004	±.005	±.010	±.016	±.024	±.04
	PREFERRED	±.012	±.016	±.025	±.04	±.060	±0.1

THIRD ANGLE PROJECTION

REMOVE BURRS AND BREAK SHARP CORNERS

DO NOT SCALE DWG

MATERIAL SEE PARTS LIST

FINISH —

DRN. R. Bentley	2-27-76	FIRST USED ON BA11-K
CHK'D		
ENG. Paul Hodges	3 Mar 76	TITLE POWER CORD 120V 240V
PROJ. ENG.		
PROD.		
NEXT HIGHER ASSY.	7009811-0-0	
SCALE NONE		
SHEET 1 OF 1		

SIZE	CODE	NUMBER	REV.
D	IA	7012500-0-0	B

DIST.

REVISIONS			
CHK	CHANGE NO.		REV.
G.Y.	7009811-00004	R WOLF	A
	7009811-00007	R. KENNEDY	B

THIS DRAWING AND SPECIFICATIONS, HEREIN, ARE THE PROPERTY OF DIGITAL EQUIPMENT CORPORATION AND SHALL NOT BE REPRODUCED OR COPIED OR USED IN WHOLE OR IN PART AS THE BASIS FOR THE MANUFACTURE OR SALE OF ITEMS WITHOUT WRITTEN PERMISSION.
COPYRIGHT © 1979 "DIGITAL EQUIPMENT CORPORATION"

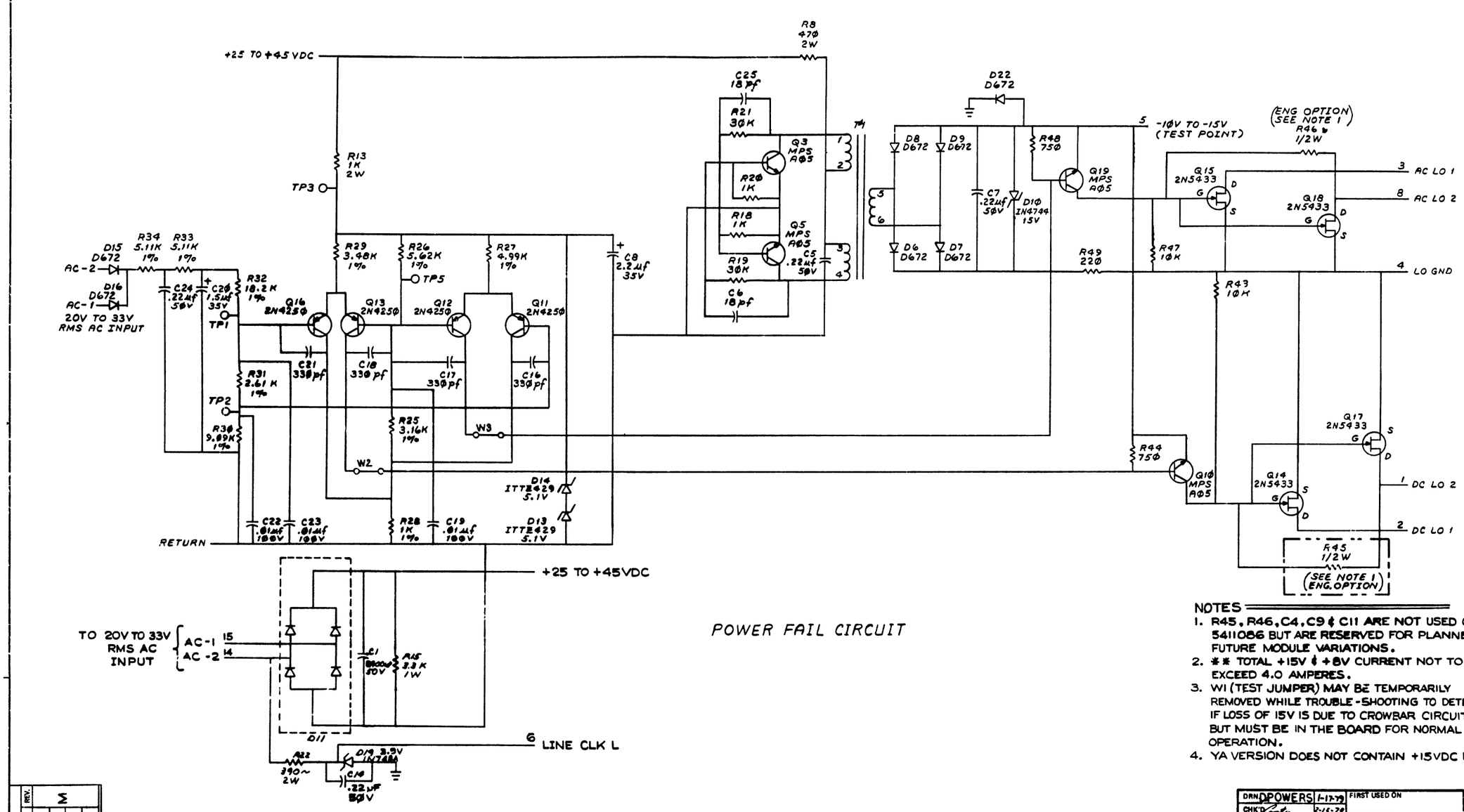

POWER FAIL CIRCUIT

NOTES

1. R45, R46, C4, C9 & C11 ARE NOT USED ON BASIC 5411086 BUT ARE RESERVED FOR PLANNED FUTURE MODULE VARIATIONS.
2. ** TOTAL +15V & +8V CURRENT NOT TO EXCEED 4.0 AMPERES.
3. W1 (TEST JUMPER) MAY BE TEMPORARILY REMOVED WHILE TROUBLE-SHOOTING TO DETERMINE IF LOSS OF 15V IS DUE TO CROWBAR CIRCUITRY. BUT MUST BE IN THE BOARD FOR NORMAL OPERATION.
4. YA VERSION DOES NOT CONTAIN +15VDC REG.

REVISIONS		
CHANGE NO.		REV.
CHK	ML008	M
	CARTER	
	R. KENNEDY	
	G. Bassey	

DRN	D POWERS	1-17-79	FIRST USED ON 60-00-0
CHK'D		2-15-79	
ENG.		2-6-79	TITLE POWER LINE MONITOR 15V REG
PROJ. ENG.		2-6-79	
PROD.		2-16-79	
NEXT HIGHER ASSY.	B-DD-5411086-0		SIZE D CODE CS NUMBER 5411086-0-1 REV. M
SCALE	NONE		
SHEET 1 OF 2			DIST

"THIS DRAWING AND SPECIFICATIONS HEREIN ARE THE PROPERTY OF DIGITAL EQUIPMENT CORPORATION AND SHALL NOT BE REPRODUCED OR COPIED OR USED IN WHOLE OR IN PART AS THE BASIS FOR THE MANUFACTURE OR SALE OF ITEMS WITHOUT WRITTEN PERMISSION. COPYRIGHT © 1970 DIGITAL EQUIPMENT CORPORATION"

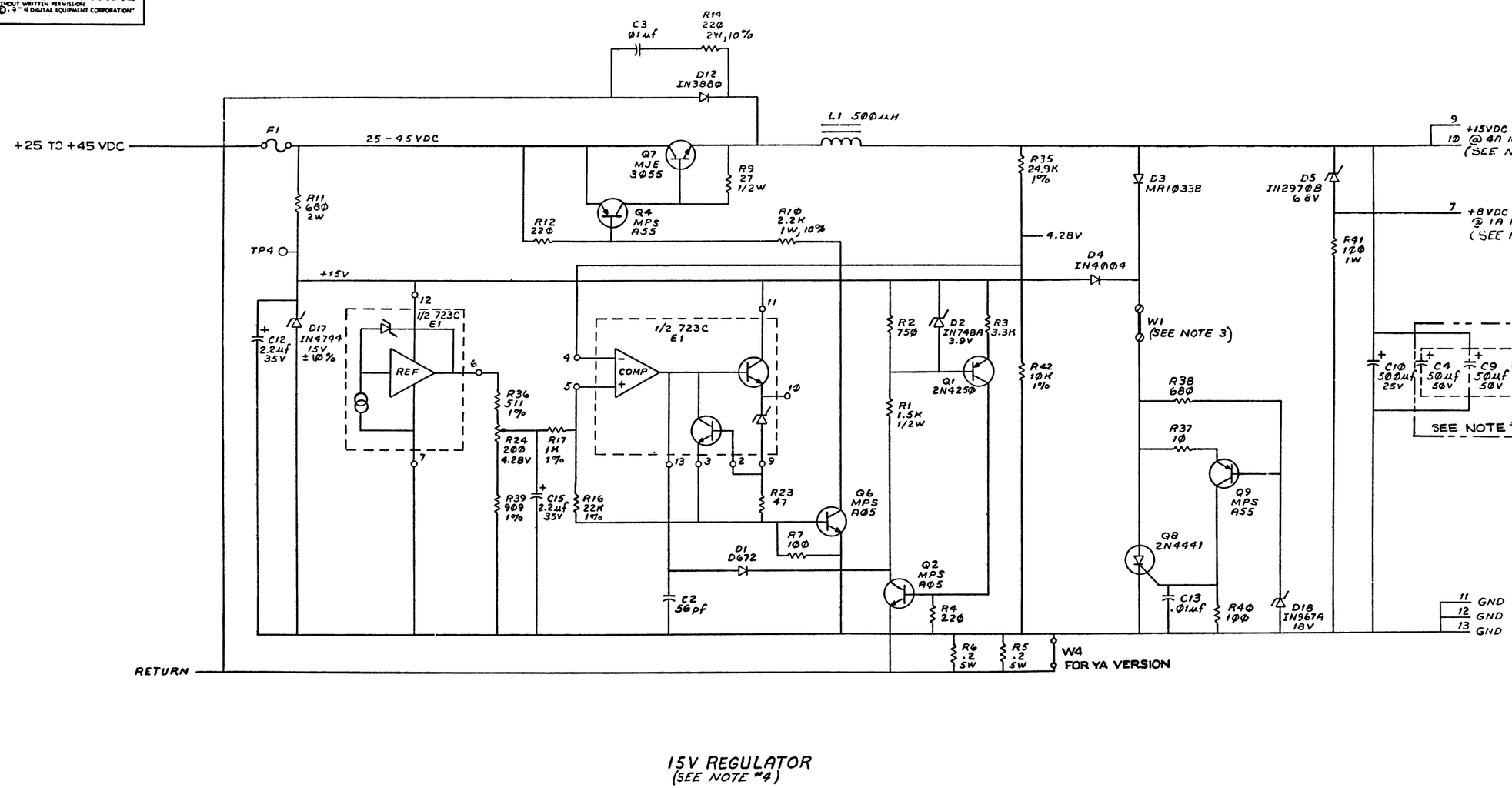

15V REGULATOR
(SEE NOTE #4)

REVISIONS		
CHK	CHANGE NO	REV

TITLE	SIZE	CODE	NUMBER	REV.
PWR. LINE MONITOR/15V REG.	D	CS	5411086-0-1	M

SCALE —/—/— SHEET 2 OF 2 DIST

"THIS DRAWING AND SPECIFICATIONS, HEREIN, ARE THE PROPERTY OF DIGITAL EQUIPMENT CORPORATION AND SHALL NOT BE REPRODUCED OR COPIED OR USED IN WHOLE OR IN PART AS THE BASIS FOR THE MANUFACTURE OR SALE OF ITEMS WITHOUT WRITTEN PERMISSION. COPYRIGHT © 1975, DIGITAL EQUIPMENT CORPORATION"

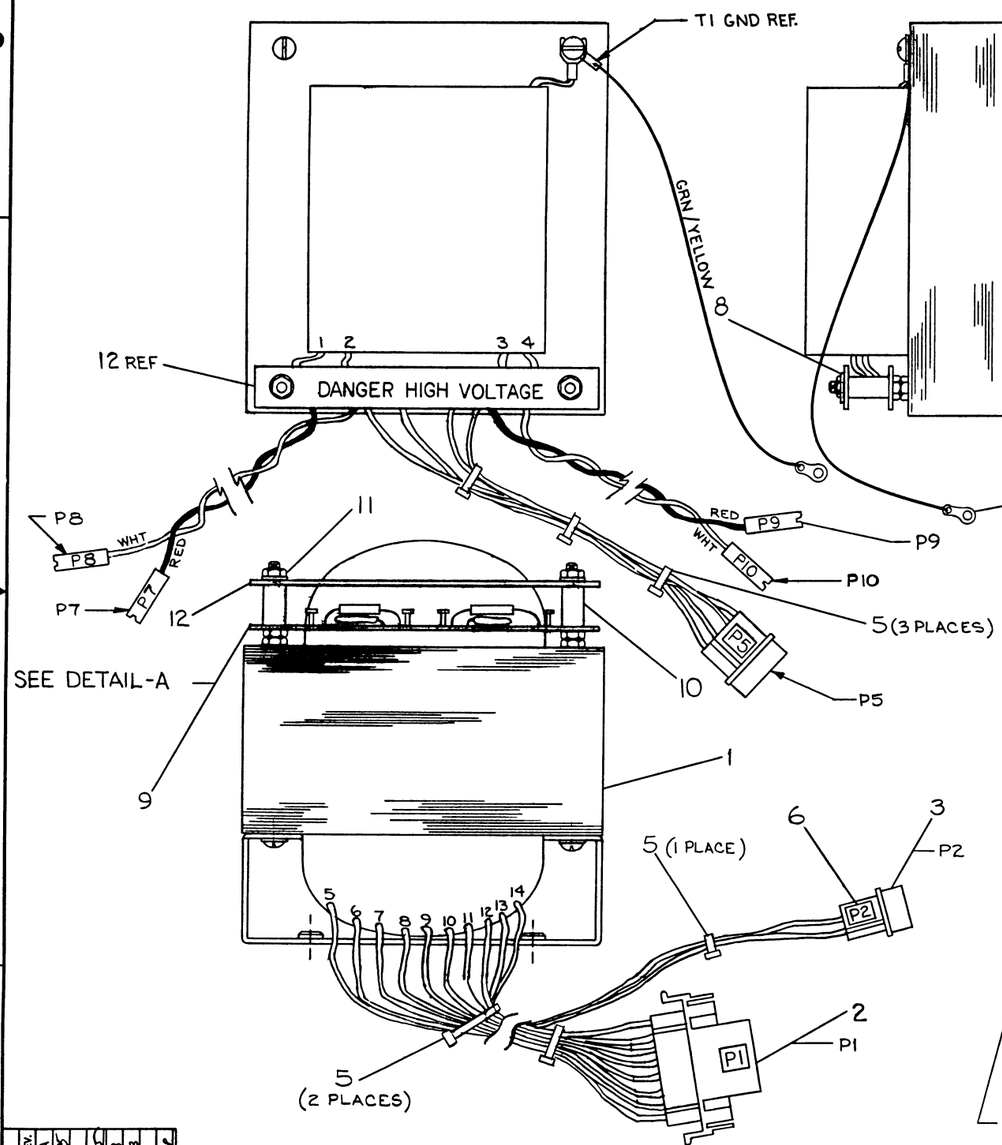

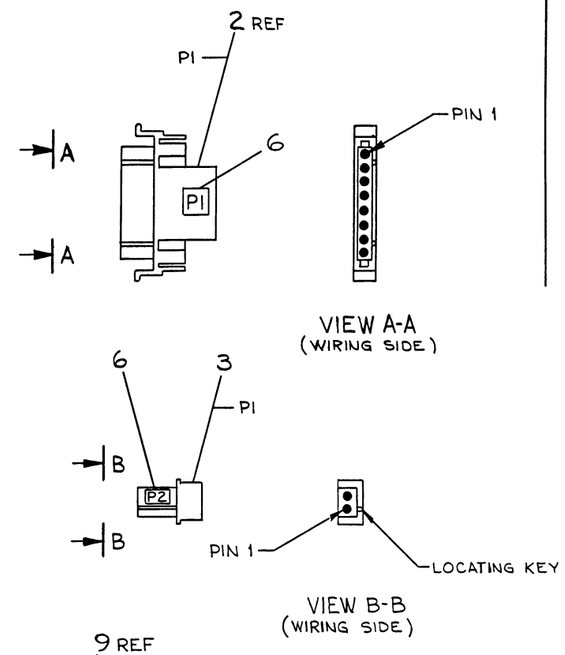

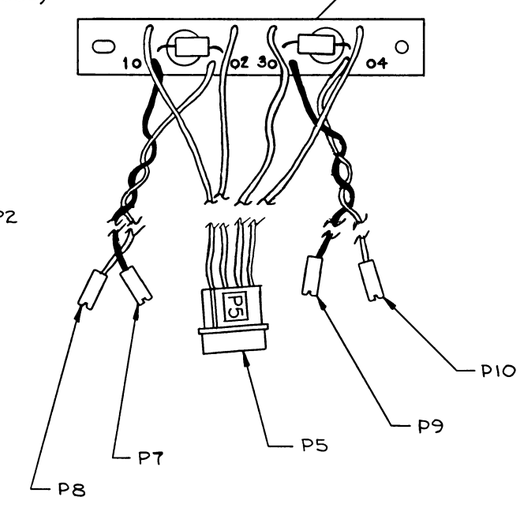

DETAIL-A
ITEM- 9

REF	DESCRIPTION	DWG /PART NO	ITEM NO
	TRANSFORMER ASSY PROCEDURE	A-SP-7011486-0-9	13
1	COVER	C-IA-7414301-0-0	12
2	NUT, KEP #10 32	9006565	11
2	SPACER, 3/8 OD X 1/2 LG	9007831	10
1	CAP MOV BOARD ASSY	D-IA-7011751-0-0	9
2	WASHER, FLAT .437 X .218 ID	9006664	8
1	GROUND LUG	9008150	7
1	DECAL	A-DC 7409872 0-0	6
A/R	CABLE TIES 5 1/4 L X 1/3 W	9007880	5
10	PIN, MALE	1209378-1	4
1	CONN., 2 PIN	1210822-2	3
1	CONN., 8 PIN	1209340-01	2
1	TRANSFORMER	1612524	1

QUANTITY & VARIATION

UNLESS OTHERWISE SPECIFIED DIMENSIONS ARE IN INCHES

ANGLES ±0° 30'	CLASS OF ACCURACY (CHECK ONE)	NOMINAL DIMENSION RANGE INCHES					
		OVER 0 TO 0.2	OVER 0.2 TO 1.2	OVER 1.2 TO 4.0	OVER 4.0 TO 12.0	OVER 12.0 TO 40.0	OVER 40.0 TO 80.0
SURFACE QUALITY IN MICROINCHES	MEDIUM	±.004	±.008	±.012	±.016	±.024	±.04
	PREFERRED	±.012	±.016	±.025	±.04	±.063	±.1

THIRD ANGLE PROJECTION

REMOVE BURRS AND BREAK SHARP CORNERS

DO NOT SCALE DWG

MATERIAL: SEE PARTS LIST

FINISH: —/—

DRN. T. Quillin
CHK'D
ENG.
PROJ. ENG.
PROD.
NEXT HIGHER ASSY.: D-DA-H782-0-0
SCALE 1/1
SHEET 1 OF 2

FIRST USED ON: H782

digital

TITLE: TRANSFORMER ASS'Y

SIZE D | CODE AD | NUMBER 7011486-0-0 | REV. B

DIST.

REVISIONS			
CHK	CHANGE NO.	REV.	
JS	7011486-00001	A	B. WOLF 15-OCT-75
DA	7014486-00002	B	R. KENNEDY 14-APR-78

SIZE D | CODE AD | NUMBER 7011486-0-0 | REV. B

"THIS DRAWING AND SPECIFICATIONS HEREIN ARE THE PROPERTY OF DIGITAL EQUIPMENT CORPORATION AND SHALL NOT BE REPRODUCED OR COPIED OR USED IN WHOLE OR IN PART AS THE BASIS FOR THE MANUFACTURE OR SALE OF ITEMS WITHOUT WRITTEN PERMISSION
COPYRIGHT © 1975 DIGITAL EQUIPMENT CORPORATION"

WIRE TABLE

ITEM NO.	DESCRIPTION AWG	DESCRIPTION COLOR	FROM CONNECTION	FROM WITH	TO CONNECTION	TO WITH	WIRE LENGTH
1	14	BLK	T1-1	—	CAP MOV BD-1	SOLDER	1.5 IN
			T1-2	—	CAP MOV BD-2	SOLDER	2.0 IN
			T1-3	—	CAP MOV BD-3	SOLDER	2.0 IN
			T1-4	—	CAP MOV BD-4	SOLDER	1.5 IN
			T1-5	—	P1-8	ITEM 4	12.0 IN
			T1-6	—	P1-7		
			T1-7	—	P1-6		
			T1-8	—	P1-5		
			T1-9	—	P1-4		
			T1-10	—	P1-3		
			T1-11	—	P1-2		
			T1-12	—	P1-1	ITEM 4	
			T1-13	—	P2-1	ITEM 4	
1	14	BLK	T1-14	—	P2-2	ITEM 4	12.0 IN
1	14	GRN/YEL	T1-GND	—	GND LUG (ITEM 7)	SOLDER	16.0 IN

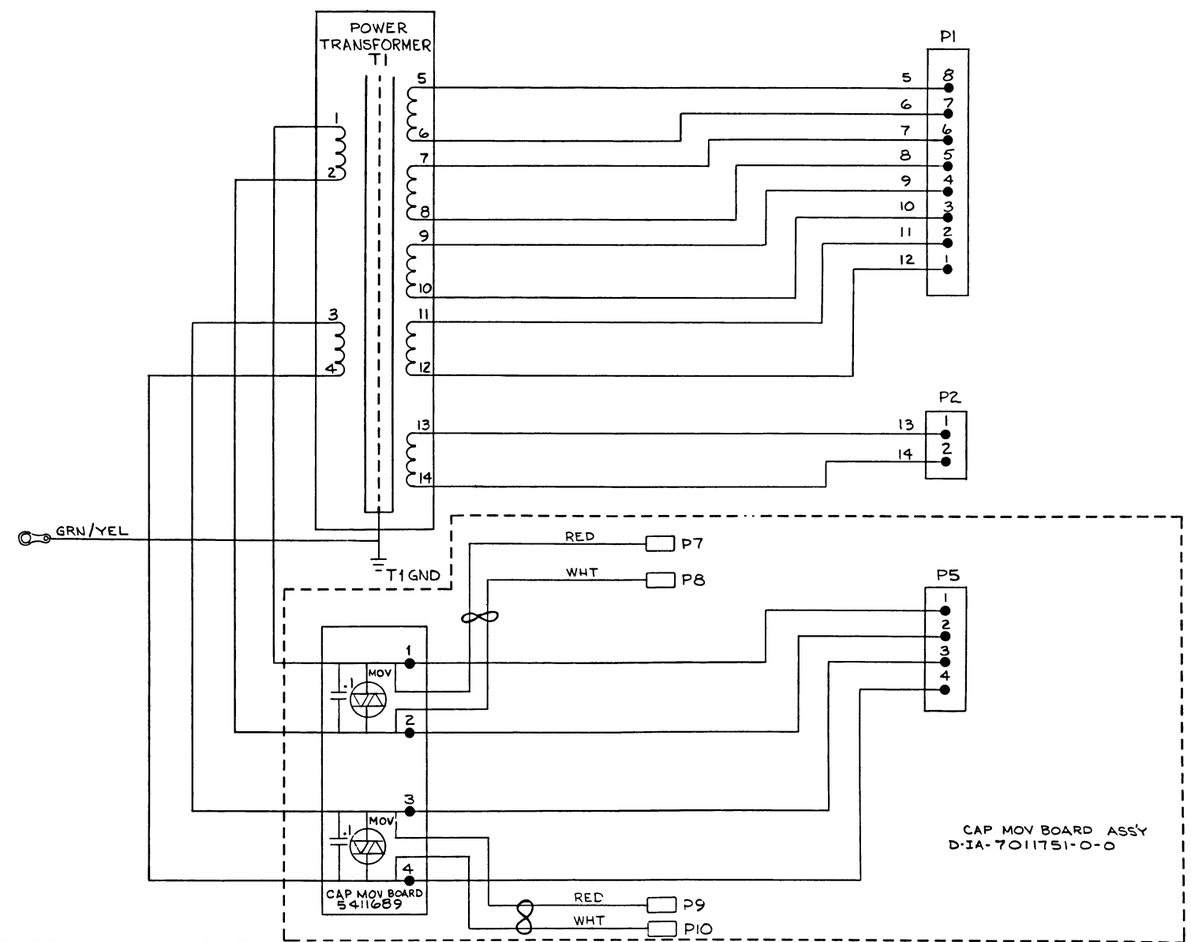

REVISIONS		
CHK	CHANGE NO	REV

TITLE	SIZE	CODE	NUMBER	REV.
TRANSFORMER ASSY	D	AD	7011486-0-0	B
SCALE — / —	SHEET 2 OF 2	DIST		

DEC FORM NO

SIZE D CODE AD NUMBER 7011486-0-0 REV B

BLANK

"THE MATERIAL HEREIN IS FOR INFORMATION PURPOSES ONLY AND IS SUBJECT TO CHANGE WITHOUT NOTICE. DIGITAL EQUIPMENT CORPORATION ASSUMES NO RESPONSIBILITY FOR ANY ERRORS WHICH MAY APPEAR HEREIN."

FIELD MAINTENANCE PRINT SET

"THIS DRAWING AND SPECIFICATIONS, HEREIN, ARE THE PROPERTY OF DIGITAL EQUIPMENT CORPORATION AND SHALL NOT BE REPRODUCED OR COPIED OR USED IN WHOLE OR IN PART AS THE BASIS FOR THE MANUFACTURE OR SALE OF ITEMS WITHOUT WRITTEN PERMISSION. COPYRIGHT © 1976 , DIGITAL EQUIPMENT CORPORATION."

TABLE OF CONTENTS

B-TC-H7441-Ø-1	H7441 UNIT ASSY (FIELD MAINT. PR. SET)
D-UA-H7441-Ø-Ø	H7441 UNIT ASSY
D-UA-5412441-0-0	REGULATOR +5V 32A
B-PL-5412441-0-0	REGULATOR +5V 32A (PL)
D-CS-5412441-0-1	REGULATOR +5V 32A (CS)

UNIT VARIATIONS COVERED BY THIS PRINT SET
H7441-Ø

H7441
Field Maintenance Print Set

Digital Equipment Corporation

PRINT SET ORDER NO.
MPØØ271

REVISIONS		
REV.		
CHG. NO.		
DATE		

USED ON OPTION/MODEL	
7013323	
1134A	
SHEET I OF 1	

DRN.	D. Healy	DATE	NOV 76
CHK'D	D. Healy	DATE	NOV 76
PROJ. ENG.		DATE	
FIELD SERV.		DATE	12-20-76

digital

TITLE: H7441 UNIT ASSY

SIZE	CODE	NUMBER	REV.
B	TC	H7441-Ø-1	

DIST.

EN 01124 16 N676 (327)

DRB 124

BLANK

"THIS DRAWING AND SPECIFICATIONS, HEREIN, ARE THE PROPERTY OF DIGITAL EQUIPMENT CORPORATION AND SHALL NOT BE REPRODUCED OR COPIED OR USED IN WHOLE OR IN PART AS THE BASIS FOR THE MANUFACTURE OR SALE OF ITEMS WITHOUT WRITTEN PERMISSION COPYRIGHT © 1976, DIGITAL EQUIPMENT CORPORATION"

NOTES:

~~1. ATTACH (RED) WIRE FROM ITEM (#1) REG. TO POSITIVE (+) TERM. OF CAPACITOR ITEM (#5). ATTACH REMAINING (BLK) WIRE TO THE (−) TERMINAL OF THE CAP (ITEM 5).~~

2. PEEL AND ATTACH ITEM 4 TO ITEM 2 AS SHOWN.

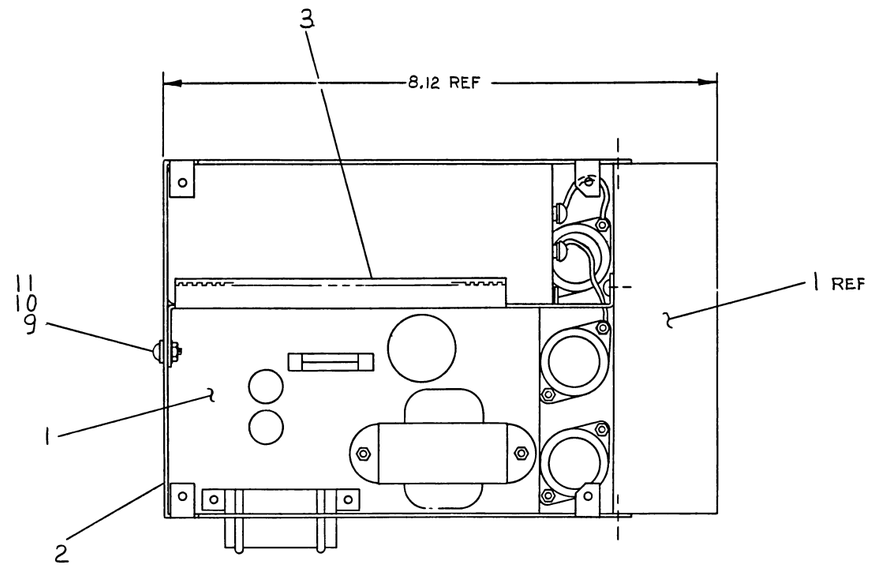

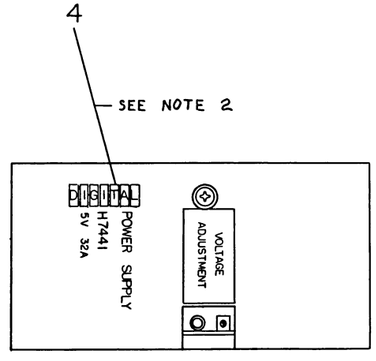

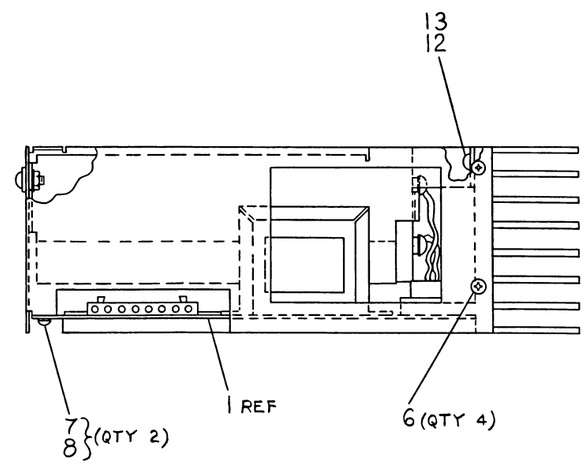

1	WASHER, LOCK INT. TOOTH #6	9006633	13
1	SCR, PHL PAN HD. #6-32X.38	9006022-01	12
1	NUT, KEPS #6-32X.31	9006560	11
1	WASHER, FLAT #6	9006659	10
1	SCR, PHL PAN HD. #6-32X.31	9006021-01	9
2	WASHER FLAT #4	9008172	8
2	SCR, PHL. PAN HD #4-40X.25	9008301-01	7
4	SCR, SELF TAPPING #4-40X.31	9009142-2	6
~~1~~	~~CAPACITOR, 24K, ±, 50 VDC~~	~~1010703-00~~	~~5~~
1	DECAL	B-1A-7416945-10	4
1	BRACKET, CAPACITOR	D-1A-7417543-0-0	3
1	BRACKET, REGULATOR	D-1A-5309756-09	2
1	REGULATOR, +5V, 32 A	D-UA-5412441-0-0	1
	DESCRIPTION	DWG /PART NO	ITEM NO.

UNLESS OTHERWISE SPECIFIED DIMENSIONS ARE IN INCHES

ANGLES ±0° 30'	CLASS OF ACCURACY (CHECK ONE)	NOMINAL DIMENSION RANGE INCHES: OVER 0 TO 0.2	OVER 0.2 TO 1.2	OVER 1.2 TO 4.0	OVER 4.0 TO 12.0	OVER 12.0 TO 40.0	OVER 40.0 TO 80.0
SURFACE QUALITY IN ✓	MEDIUM ☐	±.004	±.008	±.012	±.016	±.024	±.04
MICROINCHES	PREFERRED ☐	±.012	±.016	±.025	±.04	±.063	±0.1

QUANTITY & VARIATION

THIRD ANGLE PROJECTION

REMOVE BURRS AND BREAK SHARP CORNERS

DO NOT SCALE DWG

MATERIAL: SEE PARTS LIST

FINISH: —/—

DRN. 19 Oct 76
CHK'D 2 NOV 76
ENG.
PROJ. ENG.
PROD.

NEXT HIGHER ASSY. B-DD-H7441-0

SCALE NONE

SHEET 1 OF 1

FIRST USED ON 1134A

digital

TITLE H7441 UNIT ASSY

SIZE	CODE	NUMBER	REV.
D	UA	H7441-0-0	C

DIST.

REVISIONS			
CHK	CHANGE NO.	REV.	
	H7441-00001	A	31JAN 77
	H7441-00003	B	13DEC77
	H7441-00004	C	13-DEC-77

R. DAY
B. GIST
E. CROCKER

SIZE D CODE UA NUMBER H7441-0-0 REV. C

THIS DRAWING AND SPECIFICATIONS, HEREIN, ARE THE PROPERTY OF DIGITAL EQUIPMENT CORPORATION AND SHALL NOT BE REPRODUCED IN COPIES OR USED IN WHOLE OR IN PART AS THE BASIS FOR THE MANUFACTURE OR SALE OF ITEMS WITHOUT WRITTEN PERMISSION.
COPYRIGHT © 1977 DIGITAL EQUIPMENT CORPORATION

WIRE & BUS STRAP RUNS

NO.	FROM	TO	WIRE OR BUS LENGTH
1	FEEDTHRU AT F1	TERMINAL D1	#14 AWG 4" SEE NOTE 3
2	S1	FEEDTHRU SHOWN	#18 AWG 3"
3	S1	FEEDTHRU SHOWN	#18 AWG 2.5"
4	D12	FEEDTHRU SHOWN	DEC PT: #1214074-05 SEE NOTE 4
5	TERMINAL D1	D12	#14 AWG 3" SEE NOTE 5
6	TERMINAL D1	Q2	#14 AWG 2" SEE NOTE 6
7	Q2	Q1	DEC PT #1214074-04 SEE NOTE 7
8	TERMINAL D1	FEEDTHRU SHOWN	#14 AWG 2.75" SEE NOTE 2

NOTES: 1. MOUNT WIRES PER IA DRAWING NO. IA 7013274. RED WIRE TO CASE Q2 AND POSITIVE TERMINAL C1 & BLACK WIRE TO CASE D12 AND NEGATIVE TERMINAL C1.
2. WIRE RUN (8) IS SOLDERED AT D1
3. WIRE RUN (1) IS SOLDERED AT D1
4. STRAP (4) (ITEM #26) IS SOLDERED AT FEEDTHROUGH SHOWN AND MOUNTED UNDER RING LUG OF D12.
5. WIRE RUN (5) IS SOLDERED AT D1 AND CRIMPED TO RING LUG ITEM #87 OF D12
6. WIRE RUN (6) IS SOLDERED AT D1 AND CRIMPED TO RING LUG ITEM #87 OF Q2.
7. BUS STRAP (7) (ITEM #25) IS MOUNTED UNDER RING LUG OF Q2 AND ON CASE OF Q1.
8. TORQUE HARDWARE, ON Q1, Q2, Q4 AND D12 TO 8 INCH-LBS. FROM NUT SIDE ONLY. TORQUE OTHER HARDWARE TO DEC STD. VALUES
9. APPLY THERMAL COMPOUND TO D1 (ITEM 19) ONLY.

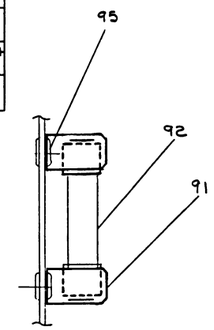

VIEW C-C

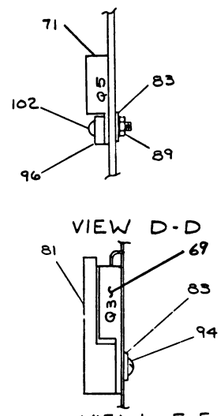

VIEW D-D

VIEW E-E

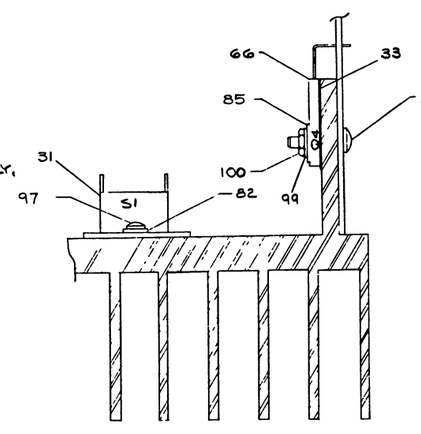

VIEW B-B

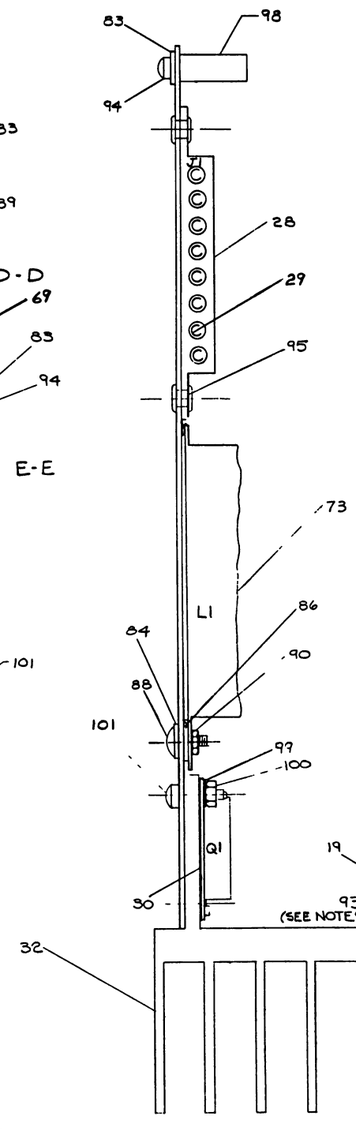

VIEW A-A

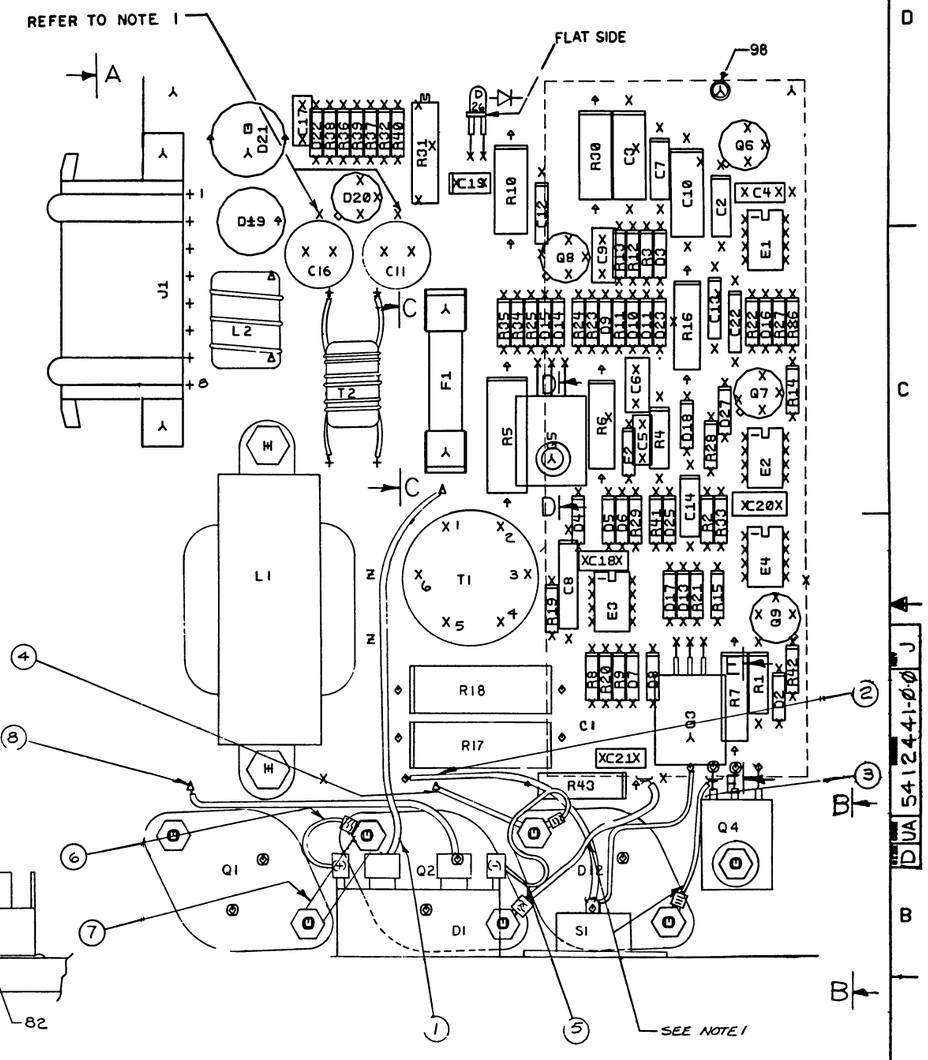

NOTES:
1. INDICATED DRILL POINTS AT C11 AND C16 SHOULD NOT BE USED FOR DRILL ALIGNMENT DURING MANUFACTURE. THESE OVERSIZED PADS WILL NOT CENTER WITH DRILL BORING.

CHG	CHANGE NO	REV
	5412441-00007	H
		J

ETCH REV. B
P.C. DESIGN DATA BASE REV. B-P4

SIGNATURES	DATE
DRN.	5-20-77
CHK'D.	23-NOV-77
ENG.	1-NOV-77
PROJ. ENG.	1-NOV-77
PROD.	1-NOV-77
SCALE 2:1	
SHT. 1 OF 3	

digital

TITLE +5V, 32 AMP REGULATOR

SIZE	CODE	NUMBER	REV
D	UA	5412441-0-0	J

NEXT HIGHER ASSY. B-DD-5412441-0

MS#

THIS DRAWING AND SPECIFICATIONS HEREIN ARE THE PROPERTY OF DIGITAL EQUIPMENT CORPORATION AND SHALL NOT BE REPRODUCED OR COPIED OR USED IN WHOLE OR IN PART AS THE BASIS FOR THE MANUFACTURE OR SALE OF ITEMS WITHOUT PERMISSION OF DIGITAL EQUIPMENT CORPORATION
COPYRIGHT © 1977

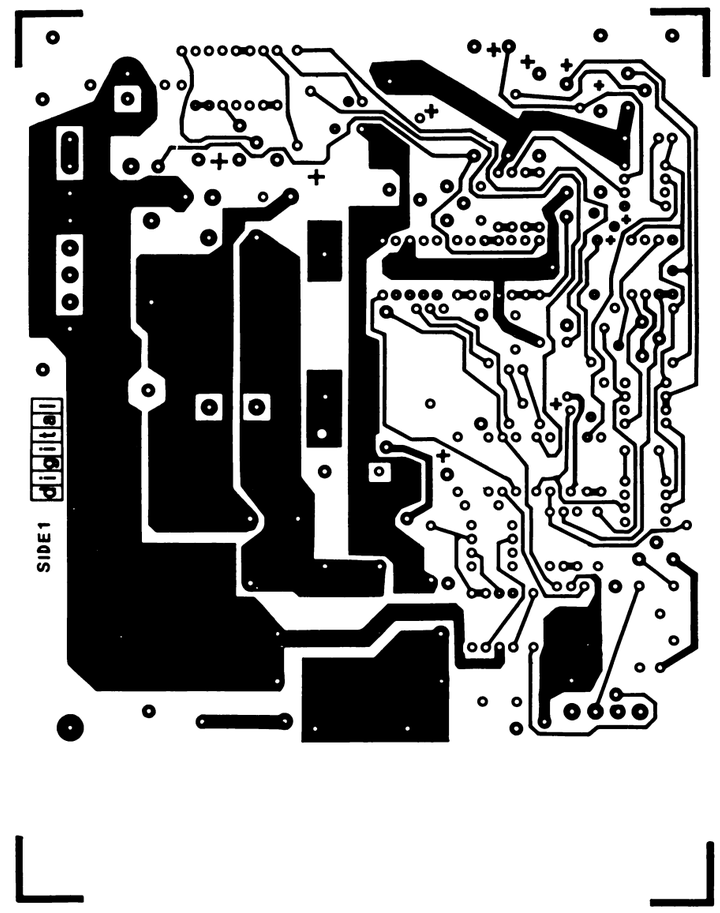

REVISIONS		
CHK	CHANGE NO.	REV

+5V, 32 AMP, REGULATOR

D UA 5412441-Ø-Ø J

2/1 2 3

THIS DRAWING AND SPECIFICATIONS HEREIN ARE THE PROPERTY OF DIGITAL EQUIPMENT CORPORATION AND SHALL NOT BE REPRODUCED OR USED IN WHOLE OR IN PART AS THE BASIS FOR THE MANUFACTURE OR SALE OF ITEMS WITHOUT WRITTEN PERMISSION
COPYRIGHT © 1977 DIGITAL EQUIPMENT CORPORATION

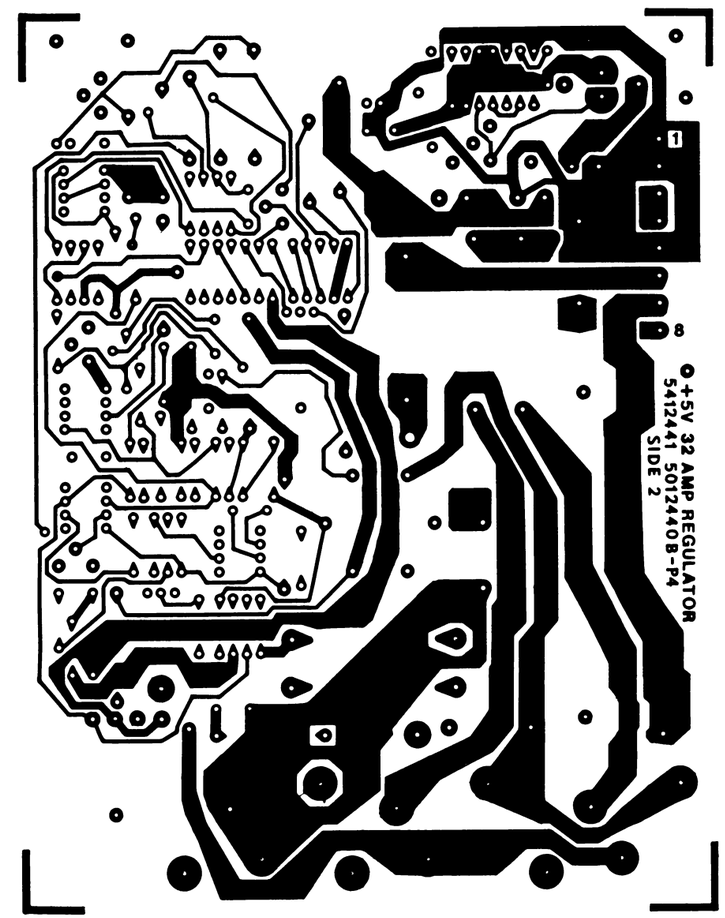

REVISIONS		
CHK	CHANGE NO	REV

TITLE +5V, 32AMP REGULATOR	SIZE D	CODE UA 5412441-0-0
SCALE 2/1	SHEET 3 OF 3	DIST

J

LINE	ITEM	DOCUMENT NO.	PART NO.	DESCRIPTION	QTY	REFERENCE DESIGNATORS
1	1	D-MD-5012440-0-0	5012440-00	5412441	1	
2	2		1000009-00	33.0 MMF 100V 5%200PPM DM15S (10-00	1	C20
3	3		1000021-00	220.0 MMF 100V 5%200PPM DM15S (10-00	1	C9
4	4		1001610-01	.01 MFD 100V OR 50V Z5U DISC/800PF MIN	5	C4,C5,C17,C18,C21
5	5		1002627-00	2.2MFD 20V 10% 150D S.TA (10	2	C2,C7
6	6		1004813-00	10 MFD 20V 10% 150D S.TA (10-00	1	C8
7	7		1010279-00	.47 MFD 25V 20% 2C023 CER.	1	C19
8	8		1010646-00	.015 MFD 50V 2% M.POLYCARB	2	C3,C10
9	9		1010702-00	24,000 MFD 50V G% 36D AL EL	1	C1
10	10		1012607-00	560 MFD 20V H% 672D AL EL	1	C11
11	11		1012607-01	1200 MFD 6.3V H% 672D AL EL	1	C16
12	12		1009964-00	.68 MFD 35V 10% 150D S.TA	1	C12
13	13		1001776-00	1 MFD 35V 10% 150D S.TA (10-00	3	C13,C14,C22
14	14		1000024-00	470.0 MMF 100V 5%200PPM DM15S (10-00	1	C6
15	15		1105508-00	1N 823 VZ= 6.2 5% .40W Y	1	D18
16	16		1102808-00	1N 752A VZ= 5.6 5% .40W P	1	D22
17	17		1103341-00	MR1033B PIV=300 I= 3A Z44 SM	1	D19
18	18		1105275-00	D 672 TR= 15NS PIV= 60V SP	15	D3-D6,D9-D11,D13-D17,D23,D25,
					CONT	D27
19	19		1110051-00	DM 16 ASSY@200V & 25A #990-3	1	D1
20	20		1110324-00	LED 1MCD@10MA #MV5054-1#HP4882	1	D26
21	21		1110836-00	1N 759A VZ= 12.0 5% .40W P	1	D2
22	22		1110968-00	2N 5062 SCR@100V I=.8A T092	1	D20
23	23		1112595-01	A114B PIV=200 I= 1A	2	D7,D8
24	24		1113496-00	UES602R PIV=100 I=30A T03	1	D12
25	25		1214074-04	STRAP,THERMAL 2 HOLE	1	
26	26		1214074-05	STRAP,THERMAL LUG .815	1	
27	27		1209070-00	FUSE, SUB-MINI, 5.000A, 125V, RADIAL LEAD	1	F2
28	28		1209340-00	MATE-N-LOK 8PIN,HOUSING,SKT	1	J1
29	29		1209456-01	MATE-N-LOK SKT PCB TAB LOOSE	8	

REVISION HISTORY			VARIATIONS FOR THIS ASSY.
CHK	ECO NO	REV	
SC	00008	J	00

FIRST USED ON:

DIGITAL EQUIPMENT CORPORATION
MAYNARD, MASSACHUSETTS

MADE BY: D.SIREEN	DATE: 10-MAR-78	TITLE PARTS LIST
CHECKED: F.GAROFALO	DATE: 10-MAR-78	+5V 32 AMP REGULATOR
DSN.ENG.: R.DAY	DATE: 10-MAR-78	
PROD.: R.B.KING	DATE: 10-MAR-78	SIZE K / CODE PL / DOCUMENT NUMBER 5412441-0-0 / REV J
RESP.ENG.: R.DAY	DATE: 10-MAR-78	ASSY.NO.: D-UA-5412441-0-0 / EDIT# 6

"THIS DRAWING AND SPECIFICATIONS HEREIN, ARE THE PROPERTY OF DIGITAL EQUIPMENT CORPORATION AND SHALL NOT BE REPRODUCED OR COPIED OR USED IN WHOLE OR IN PART AS THE BASIS FOR THE MANUFACTURE OR SALE OF ITEMS WITHOUT WRITTEN PERMISSION.
COPYRIGHT 1978, DIGITAL EQUIPMENT CORPORATION "

LINE	ITEM	DOCUMENT NO.	PART NO.	DESCRIPTION	QTY	REFERENCE DESIGNATORS
30	30		1213071-02	INSULATOR,RUBBER SILICONE SM	3	
31	31		1212787-00	THERMOSTAT,O@212,C@182,NC	1	S1
32	32		1210737-02	HEAT SINK,REGULATOR	1	
33	33		1213071-06	INSULATOR,RUBBER SILICONE	1	
34	34		1312626-00	2.49 K 1/4W 1% RN55D-F 100PPM (13-00	1	R32
35	35		1300229-00	100 1/4W 5% CC (13-00	2	R37,R38
36	36		1300250-00	150 1/4W 5% CC (13-00	2	R24,R34
37	37		1305322-00	7.5 K 1/4W 1% RN55D-F 100PPM (13-00	1	R19
38	38		1300295-00	330 1/4W 5% CC (13-00	1	R23
39	39		1301424-00	680 1/4W 5% CC (13-00	1	R28
40	40		1301327-00	68 K 1/4W 5% CC (13-00	1	R29
41	41		1300439-00	3.3 K 1/4W 5% CC (13-00	1	R35
42	42		1310219-00	.25 3W 1% WW (13-00	1	R5
43	43		1300248-00	130 1W 5% CC (13-00	1	R6
44	44		1302644-00	226 1/4W 1% RN55D-F 100PPM (13-00	2	R8,R9
45	45		1300277-00	220 1W 10% CC (13-00	1	R16
46	46		1300309-00	390 1/4W 5% CC (13-00	1	R40
47	47		1312922-00	536 1/4W 1% RN55D-F 100PPM (13-00	1	R33
48	48		1300365-00	1 K 1/4W 5% CC (13-00	3	R13,R21,R27
49	49		1300394-00	1.5 K 1/2W 5% CC (13-00	1	R1
50	50		1300447-00	4.7 K 1/4W 5% CC (13-00	2	R12,R41
51	51		1300479-00	10 K 1/4W 5% CC (13-00	4	R14,R15,R22,R42
52	52		1301695-00	47 1/2W 5% CC (13-00	1	R4
53	53		1301972-00	270 1/4W 5% CC (13-00	1	R11
54	54		1312747-00	56.2 K 1/4W 1% RN55D-F 100PPM (13-00	1	R20
55	55		1302751-00	30 1/4W 5% CC (13-00	2	R36,R39
56	56		1302871-00	1.21 K 1/4W 1% RN55D-F 100PPM (13-00	1	R2
57	57		1303179-00	8.2 K 1/4W 5% CC (13-00	2	R25,R26
58	58		1305337-00	3.65 K 1/4W 1% RN55D-F 100PPM (13-00	1	R3
59	59		1309143-07	1 K 3/4W10% POT 100PPM	1	R31
60	60		1310868-00	.39 2W 5% WW (13-00	1	R10
61	61		1313712-00	.01 5W 3% WW (13-00	2	R17,R18
62	62		1312682-00	3 3W 5% (13-00	1	R7
63	63		1300256-00	150 1W 10% CC (13-00	1	R30
64	64		1300171-00	10 1W 5% CC (13-00	1	R43
65	65		1510196-00	2N 5302/HSNPN 200WC SI 60 40 M	2	Q1,Q2
66	66		1510555-00	MJE3055 NPN 90WC SI 60 20 Y	1	Q4
67	67		1510705-00	XA 05 NPN 500MW SI 60 50 P	2	Q6,Q7
68	68		1510706-00	XA 55 PNP 500MW SI 60 50 P	1	Q8
69	69		1510708-00	D 45H8 PNP 50WT SI 60 60 Y	1	Q3
70	70		1510928-00	C32AX135 SCR@100V I=25A	1	D21
71	71		1512790-00	D 44C11 NPN 30W SI 80 40	1	Q5
72	72		1511686-00	DEC5433 FET N 350MW 10 25 1A 20U	1	Q9
73	73		1612584-00	50 UH 30A	1	L1
74	74		1612592-00	PULSE XFMR,RATIO 4:1	1	T1
75	75		1613713-00	CHOKE, 5 UH 32A	1	L2
76	76		1613714-00	2 UH 20A	1	T2
77	77		1910282-00	301AN OP AMP	2	E3,E4

	TITLE	SIZE	CODE	DOCUMENT NUMBER	REV
DIGITAL EQUIPMENT CORPORATION MAYNARD, MASSACHUSETTS	PARTS LIST +5V 32 AMP REGULATOR	K	PL	5412441-0-0	J

LINE	ITEM	DOCUMENT NO.	PART NO.	DESCRIPTION	QTY	REFERENCE DESIGNATORS
78	78		1911944-00	555CN TIMER,FUNCT.CLOCK	2	E1,E2
79	79		7013274-00	JUMPER CAP TRAWS	1	
80	80		7013274-01	JUMPER CAP TRAWS	1	
81	81		7414765-00	HEATSINK	1	
82	82		9006633-00	WASHER,LOCK,INT,.280OD X .146ID X .018 THK	3	
83	83		9008172-00	WASHER, FLAT,SS .250 OD X .125 ID X .022 T	3	
84	84		9006660-00	WASHER, FLAT, .375 O.D. X .187 I.D. X .036	2	
85	85		9006653-00	WASHER, FLAT, .375 O.D. X .156 I.D. X .036	1	
86	86		9008082-00	WASHER, FLAT, FIBER OD. 1/2	2	
87	87		9007927-00	TERM RING 1POS INSULATED,16-14AWG,ROLL	2	
88	88		9006037-03	SCREW,TRUS,PHIL, 8-32X 3/8 SS/PAS	2	
89	89		9006557-00	NUT,KEP , 4-40X 1/4 AF CS	1	
90	90		9006563-00	NUT,KEP , 8-32 X11/32AF CS	2	
91	91		9007203-00	CLIP, FUSE, WITH STOP, SCREW MOUNTED	2	
92	92		9007226-00	FUSE, REG BLOW, 15.000A, 32V, GLASS	1	F1
93	93		9008268-00	COMPOUND, THERMAL JOINT	A/R	
94	94		9006012-01	SCREW,PAN ,PHIL, 4-40X 7/16 SS/PAS	2	
95	95		9009000-00	EYELET, ROLLED FLANGE, .121 OD X .156 LG	4	
96	96		9009769-00	WASHER, RECTANGULAR .405X.225X.060	1	
97	97		9006021-01	SCREW,PAN ,PHIL, 6-32X 5/16 SS/PAS	2	
98	98		9007660-00	SPACER, FIBER, RND, 4-40, .250 X .500 LG	1	
99	99		9007801-00	WASHER, LOCK, S.S. #6	7	
100	100		9008957-00	NUT,HEX , 6-32X 1/4 AF X 3/32 THK SS	7	
101	101		9007793-01	SCREW,PAN ,PHIL, 6-32X 9/16 SS/PAS	8	
102	102		9006010-01	SCREW,PAN ,PHIL, 4-40X 5/16 SS/PAS	1	
103	103		9107360-99	WIRE,STRND,18AWG,IPVC UL1429 (91-00	A/R	
104	104		9107370-00	WIRE,STRND,14AWG,IPVC UL1534 (91-00	A/R	

DIGITAL EQUIPMENT CORPORATION MAYNARD, MASSACHUSETTS	TITLE PARTS LIST +5V 32 AMP REGULATOR	SIZE K	CODE PL	DOCUMENT NUMBER 5412441-0-0	REV J

"THIS DRAWING AND SPECIFICATIONS, HEREIN, ARE THE PROPERTY OF DIGITAL EQUIPMENT CORPORATION AND SHALL NOT BE REPRODUCED OR COPIED OR USED IN WHOLE OR IN PART AS THE BASIS FOR THE MANUFACTURE OR SALE OF ITEMS WITHOUT WRITTEN PERMISSION. COPYRIGHT © 1976 DIGITAL EQUIPMENT CORPORATION"

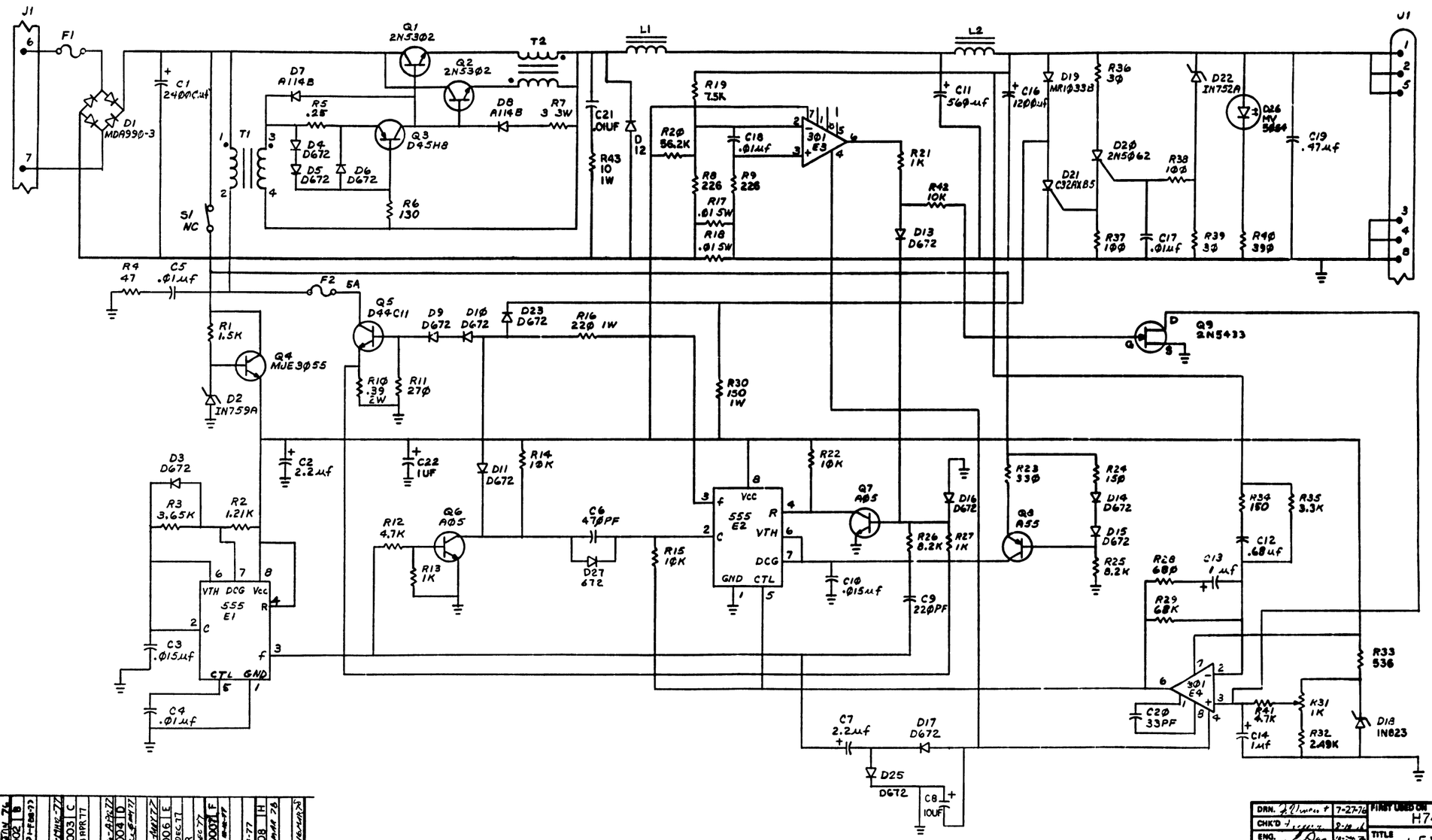

CHK	CHANGE NO.	REV.		
SZ	5412441-00001	A	R. DAY	21 DEC 76
	5412441-00002	B	R. DAY	7-MAR-77
	5412441-00003	C	R. DAY	19 APR 77
	5412441-00004	D	R. DAY	26-APR-77
	5412441-00005	E	R. DAY	5 DEC 77
	5412441-00007	F	E. CROCKER	20 DEC 77
	5412441-00008	H	B. GIST	12-10-77
P.C.	5412441-00008	H	B. GIST	8 MAR 78

DRN.		7-27-76
CHK'D		
ENG.		
PROJ. ENG.		
PROD.		
NEXT HIGHER ASSY.		
SCALE	—	
SHEET	1 OF 1	

FIRST USED ON: H7441

TITLE: +5V 32 AMP REGULATOR

SIZE	CODE	NUMBER	REV.
D	CS	5412441-0-1	H

DIST.

"THE MATERIAL HEREIN IS FOR INFORMATION PURPOSES ONLY AND IS SUBJECT TO CHANGE WITHOUT NOTICE. DIGITAL EQUIPMENT CORPORATION ASSUMES NO RESPONSIBILITY FOR ANY ERRORS WHICH MAY APPEAR HEREIN."

FIELD MAINTENANCE PRINT SET

"THIS DRAWING AND SPECIFICATIONS, HEREIN, ARE THE PROPERTY OF DIGITAL EQUIPMENT CORPORATION AND SHALL NOT BE REPRODUCED OR COPIED OR USED IN WHOLE OR IN PART AS THE BASIS FOR THE MANUFACTURE OR SALE OF ITEMS WITHOUT WRITTEN PERMISSION. COPYRIGHT © 1976, DIGITAL EQUIPMENT CORPORATION."

TABLE OF CONTENTS

B-TC-H785-Ø-1	H785 REGULATOR BATTERY BACKUP (TC)
E-UA-H785-Ø-Ø	H785 UNIT ASSY
D-UA-5412343-0-0	H785 BATTERY BACKUP REGULATOR
B-PL-5412343-0-0	H785 BATTERY BACKUP REGULATOR (PL)
D-CS-5412343-0-1	H785 BATTERY BACKUP REGULATOR (CS)
D-UA-5412385-0-0	H785 CONTROL BOARD
B-PL-5412385-0-0	H785 CONTROL BOARD (PL)
D-CS-5412385-0-1	H785 CONTROL BOARD (CS)
D-UA-5412411-0-0	INPUT RECTIFIER BOARD
B-PL-5412411-0-0	INPUT RECTIFIER BOARD (PL)
D-CS-5412411-0-1	INPUT RECTIFIER BOARD (CS)

UNIT VARIATIONS COVERED BY THIS PRINT SET
H785-Ø

H785
Field Maintenance Print Set

Digital Equipment Corporation

PRINT SET ORDER NO.
MPØØ272

REVISIONS	
REV.	A
CHG. NO.	H785-3
DATE	2-78

USED ON OPTION/MODEL	
7013323	
1134A	

SHEET I OF 1

DRN.	D. HEALY	DATE NOV 76
CHK'D	D. HEALY	DATE NOV 76
PROJ. ENG.	Joe Merconi	DATE 12-19-76
FIELD SERV.	[illegible]	DATE 12-20-76

digital

TITLE: H785 REGULATOR BATTERY BACKUP

SIZE	CODE	NUMBER	REV.
B	TC	H785-Ø-1	A

DIST.

EN-01124-16-N675-(327)

DRB 124

BLANK

"THIS DRAWING AND SPECIFICATIONS, HEREIN, ARE THE PROPERTY OF DIGITAL EQUIPMENT CORPORATION AND SHALL NOT BE REPRODUCED OR COPIED OR USED IN WHOLE OR IN PART AS A BASIS FOR MANUFACTURE OR SALE OF ITEMS WITHOUT WRITTEN PERMISSION.
COPYRIGHT © 1976, DIGITAL EQUIPMENT CORPORATION"

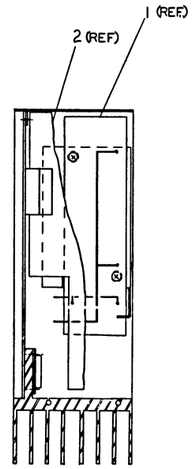

SECTION B-B

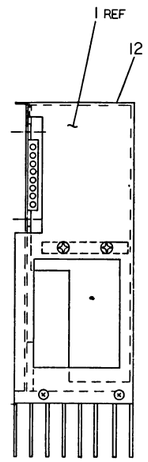

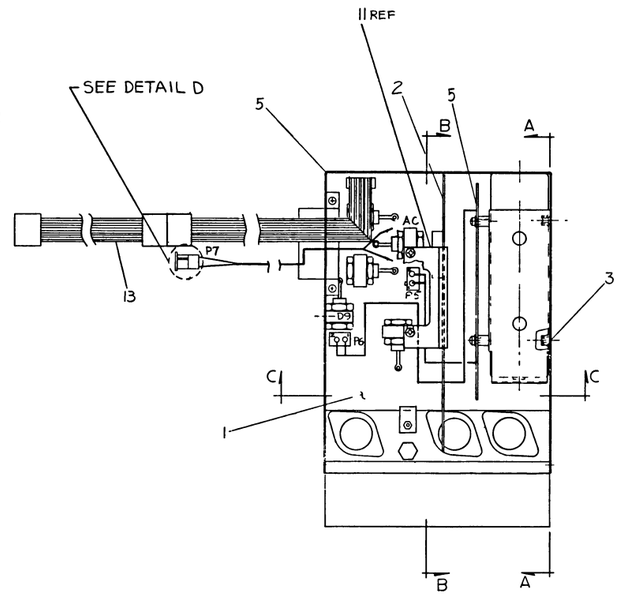

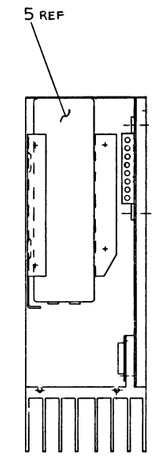

SECTION A-A

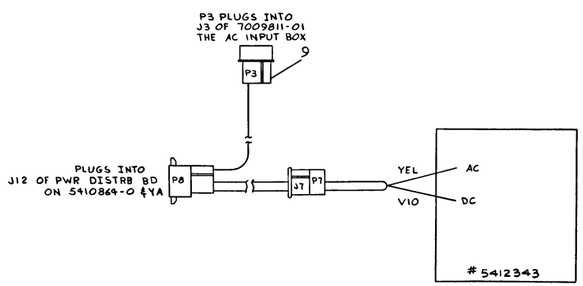

DETAIL D

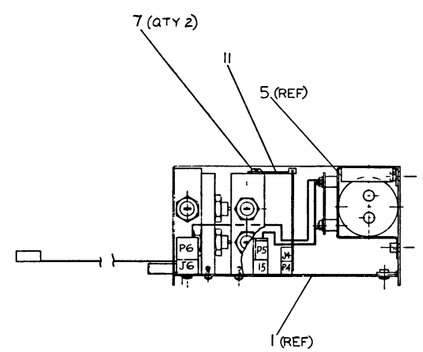

SECTION C-C

1	CABLE, CONSOLE	7011411-2J	13
1	DECAL, H785-H785Ø	7416945-06	12
1	RETAINER, CARD	B-MD-7418124-0-0	11
~~2~~	~~SCR PH PL HD 6-32 x .31~~	~~9008104-2~~	~~10~~
1	CABLE, AC, DC/LO	C-IA-7013676-0-0	9
~~3~~	~~WASH, LOCK INT TOOTH #4~~	~~9004532~~	~~8~~
2	SCR. PH, HD PAN #4-40 x .25	9008301-01	7
~~4~~	~~SCR. PH HD FLAT~~	~~9009142-2~~	~~6~~
~~4~~	~~SELF TAP #4-40 x .1~~		
1	CAPACITOR BRKT. ASSY	C-AD-7013322-0-0	5
~~AR~~	~~COMPOUND, THERMAL~~	~~9008248~~	~~4~~
4	SCR. PH. FL. HD. #6-32 x .19	9008020-2	3
1	H785 CONTROL BOARD	D-UA-5912385-0-0	2
1	H785 BATTERY BACKUP REGULATOR	D-UA-5412343-0-0	1
	DESCRIPTION	DWG./PART NO.	ITEM NO.

UNLESS OTHERWISE SPECIFIED DIMENSIONS ARE IN INCHES

ANGLES ±1°	CLASS OF ACCURACY (CHECK ONE)	NOMINAL DIMENSION RANGE INCHES					
		OVER 0 TO 3	OVER 3 TO 6	OVER 6 TO 12	OVER 12 TO 48	OVER 48 TO 120	OVER 120 TO 240
SURFACE QUALITY ✓ IN MICROINCHES	MEDIUM ☐	±.004	±.008	±.012	±.016	±.024	±.04
	PREFERRED ☐	±.012	±.016	±.020	±.06	±.083	±0.1

QUANTITY & VARIATION

THIRD ANGLE PROJECTION

REMOVE BURRS AND BREAK SHARP CORNERS

DO NOT SCALE DWG

MATERIAL: SEE PARTS LIST

FINISH

DRN P. Dowd 7/1/76
CHK D 7/1/76
ENG 7/19/76
PROJ ENG 7/19/76
PROD
NEXT HIGHER ASSY: B DD-H785-Ø
SCALE: FULL
SHEET OF 1

FIRST USED ON: 1134A

digital

TITLE: REGULATOR BATTERY BACKUP

SIZE E | CODE UA | NUMBER H785-Ø-Ø | REV C

DIST

REVISIONS			
ZONE	DWG	REV	
	H785-00001	A	
	H785-00002	B	
	H785-00003	C	

DEC FORM NO. FNE 1304-6

UA H785-0-0 C

THIS DRAWING AND SPECIFICATIONS, HEREIN, ARE THE PROPERTY OF DIGITAL EQUIPMENT CORPORATION AND SHALL NOT BE REPRODUCED OR COPIED OR USED IN WHOLE OR IN PART AS THE BASIS FOR THE MANUFACTURE OR SALE OF ITEMS WITHOUT WRITTEN PERMISSION. COPYRIGHT © 1977 DIGITAL EQUIPMENT CORPORATION

UNTWIST ITEM NO. 77 AND USE PROPER COLOR.

WIRE TABLE

ITEM NO.	RUN NO	DESCRIPT. AWG	COLOR	FROM	TO H785	TO H7850	LENGTH
77	75	18 TWP	BLK	D11 ANODE	PAD 1	PAD 1	4.50
	76		RED	D10 ANODE	PAD 2	PAD 2	4.50
	77	18	RED	D9 CATHODE	PAD 3	PAD 3	3.00
	78	18	RED	D12 CATHODE	PAD 10	PAD 10	3.75
77	79	18 TWP	BLK	D16 ANODE	PAD 11	PAD 11	1.50
	80		RED	D15 ANODE	PAD 6	PAD 6	2.00
77	81	18 TWP	BLK	D17 CATHODE	PAD 8	PAD 7	2.75
	82		RED	D18 CATHODE	PAD 4	PAD 5	2.75
77	83	18 TWP	RED	D13 ANODE	D18 CATHODE	D18 CAT.	3.50
	84		BLK	D14 ANODE	D17 CATHODE	D17 CAT.	3.50
	85	18	BLK	D9 ANODE	PAD 9	PAD 9	3.00

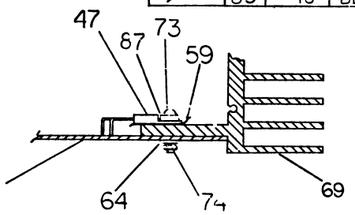

VIEW D-D
SCALE: NONE

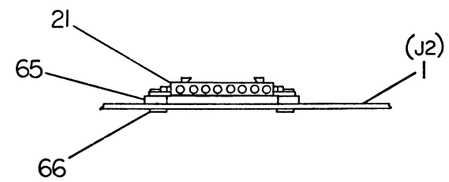

VIEW B-B
SCALE: NONE

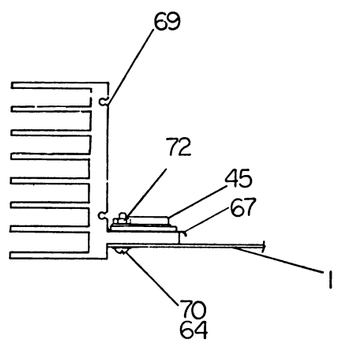

VIEW C-C
SCALE: NONE

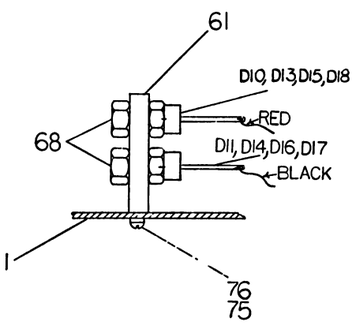

VIEW A-A
SCALE: NONE
TYP. 4 PLACES

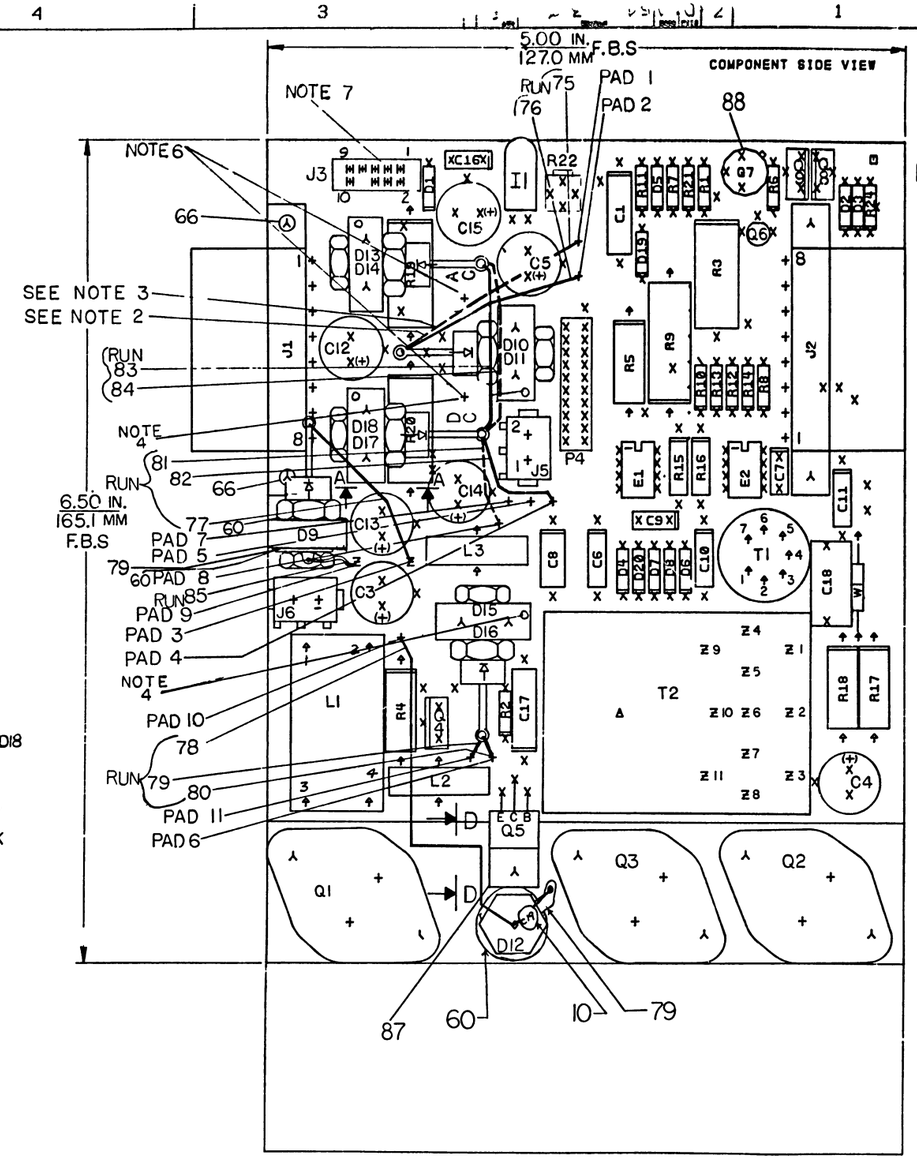

NOTES:
1. SEE SHEET 4 OF 4 FOR DIODE WIRING.
2. SOLID LINE INDICATES WIRE FROM THE TOP DIODE.
3. DASHED LINE INDICATES WIRE FROM BOTTOM DIODE.
4. TAPPED HOLE AT TOP OF HEATSINKS MUST FACE PROPER WAY TO ALLOW INSERTION OF CARD GUIDE.
8. TORQUE SPECIFICATIONS:
Q1-Q3 10 IN-LBS IN PCT TO MIN OF 6 TORQUE FROM SCREW HEAD
Q5 8 IN LBS INSPECT TO MIN OF 5 TORQUE FROM SCREW HEAD
D9-D18 16 IN LBS INSPECT TO MIN OF 12 TORQUE FROM NUT SIDE

NOTES:
6. SOLDER ITEM NO 55 AC, DC CABLE TO REGULATOR BOARD RED WIRE TO PTH MARKED DC. BLACK WIRE TO PTH MARKED AC
7. INSERT ON TO J3 ITEM NO. 58

REVISIONS				
CHK	CHANGE NO	REV		
K. Pottier	5412343-00001	C		
K. Pottier	5412343-00002	D		
K. Pottier	5412343-00003	E		
J. Mercuri	5412343-WL004	F		

ETCH REV. C
P.C. DESIGN DATA BASE REV. C

SIGNATURES	DATE
DRN.	12-8-76
CHK'D.	3-77
ENG.	1-3-77
PROJ. ENG.	1-3-77
PROD.	2-8-77

digital

TITLE H785 BATTERY BACKUP REGULATOR

SCALE 2-1
SHT. 1 OF 5
NEXT HIGHER ASSY. B-DD-5412343-0

SIZE	CODE	NUMBER	REV
D	UA	5412343-0-0	F

MS#60029

'THIS DRAWING AND SPECIFICATIONS HEREIN ARE THE PROPERTY OF DIGITAL EQUIPMENT CORPORATION AND SHALL NOT BE REPRODUCED OR COPIED OR USED IN WHOLE OR IN PART AS THE BASIS FOR THE MANUFACTURE OR SALE OF ITEMS WITHOUT WRITTEN PERMISSION
COPYRIGHT © 1977 DIGITAL EQUIPMENT CORPORATION'

5012342C 5412343

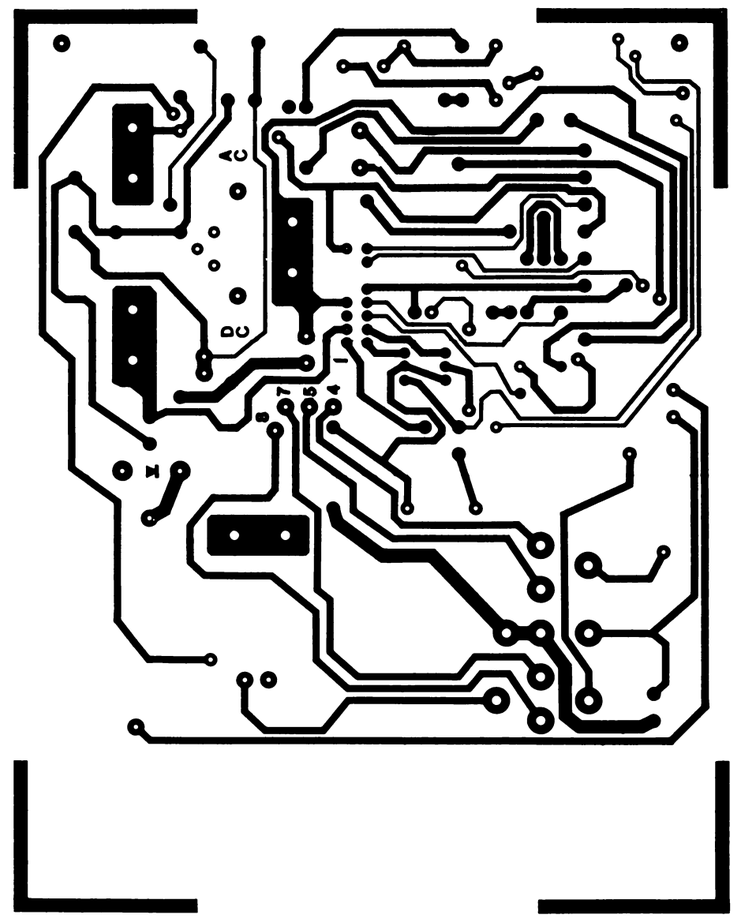

REVISIONS		
CHK	CHANGE NO	REV

TITLE H785 BATTERY BACKUP REGULATOR	SIZE D	CODE UA	NUMBER 5412343-0-0
SCALE 2/1	SHEET 2 OF 5	DIST	REV F

D UA 5412343-0-0 F

"THIS DRAWING AND SPECIFICATIONS HEREIN ARE THE PROPERTY OF DIGITAL EQUIPMENT CORPORATION AND SHALL NOT BE REPRODUCED OR COPIED OR USED IN WHOLE OR IN PART AS THE BASIS FOR THE MANUFACTURE OR SALE OF ITEMS WITHOUT WRITTEN PERMISSION
COPYRIGHT ©1977 DIGITAL EQUIPMENT CORPORATION"

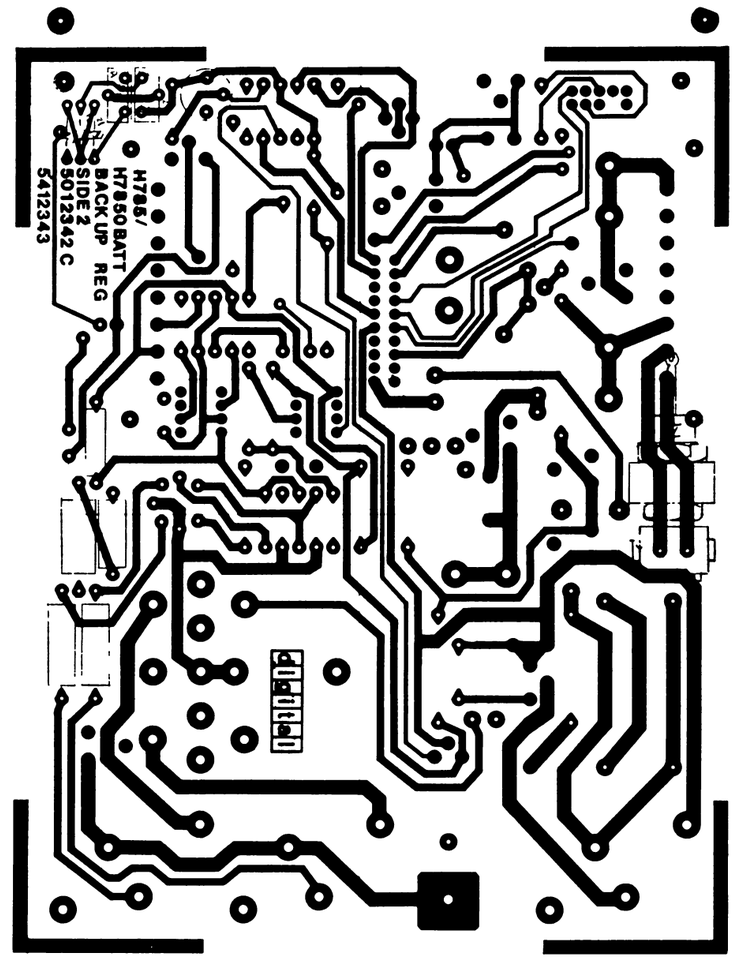

REVISIONS		
CHK	CHANGE NO	REV

TITLE H785 BATTERY BACKUP REGULATOR					SIZE D	CODE UA	NUMBER 5412343-Ø-Ø	REV F
SCALE 2/1	SHEET 3 OF 5				DIST			

DEC FORM NO DRD 137

"THIS DRAWING AND SPECIFICATIONS, HEREIN, ARE THE PROPERTY OF DIGITAL EQUIPMENT CORPORATION AND SHALL NOT BE REPRODUCED OR COPIED OR USED IN WHOLE OR IN PART AS THE BASIS FOR THE MANUFACTURE OR SALE OF ITEMS WITHOUT WRITTEN PERMISSION.
COPYRIGHT © 1976 DIGITAL EQUIPMENT CORPORATION"

NOTES:

1. WIRING INFORMATION IS ON SHEET 1 OF 4.

2. DIODES TO BE ASSEMBLED TO HEAT-SINKS AND WIRED AS SHOWN BEFORE INSTALLING TO BOARD.

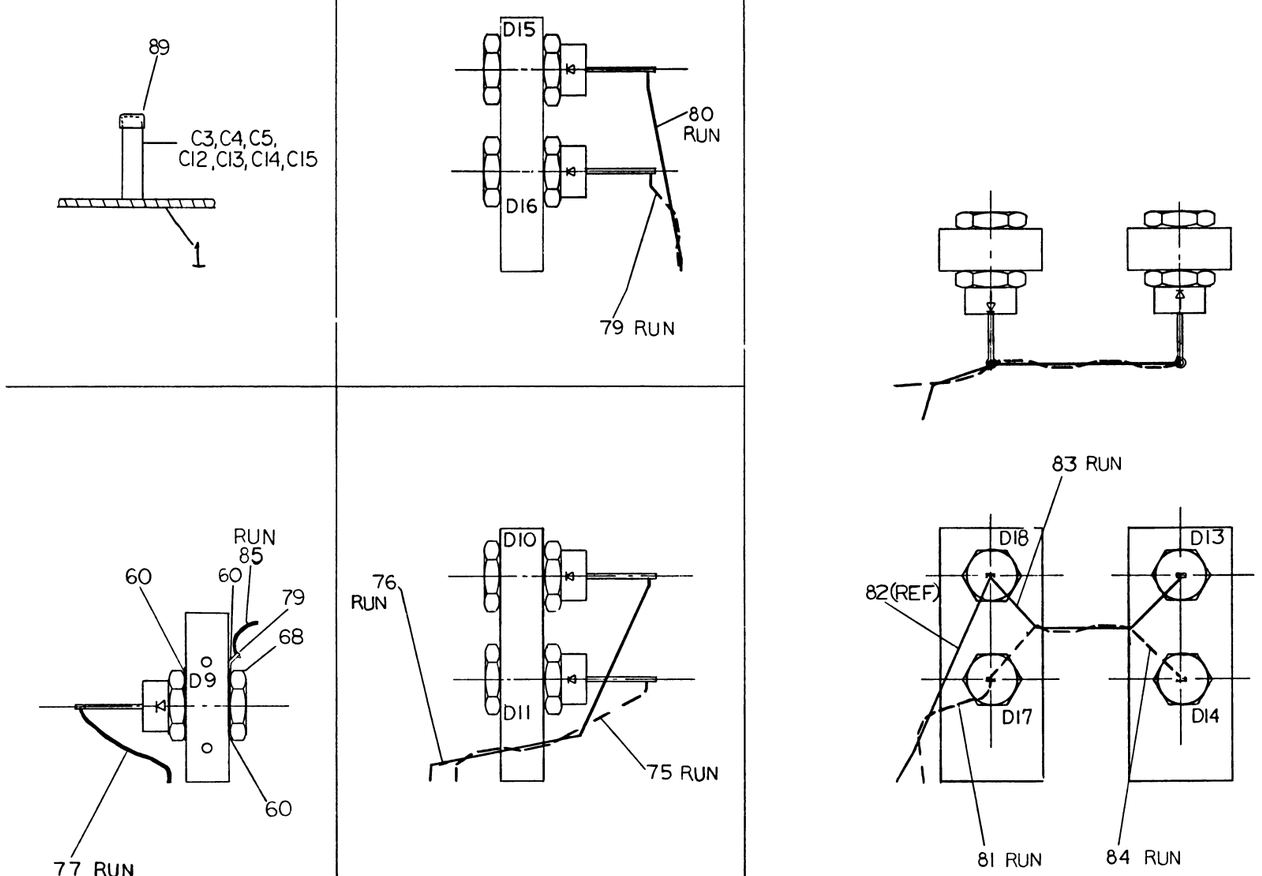

REVISIONS		
CHK	CHANGE NO	REV.

TITLE	SIZE	CODE	NUMBER	REV.
H785 BATTERY BACKUP REGULATOR	D	UA	5412343-0-0	F
SCALE 2/1	SHEET 4 OF 5	DIST.		

"THIS DRAWING AND SPECIFICATIONS, HEREIN, ARE THE PROPERTY OF DIGITAL EQUIPMENT CORPORATION AND SHALL NOT BE REPRODUCED OR COPIED OR USED IN WHOLE OR IN PART AS THE BASIS FOR THE MANUFACTURE OR SALE OF ITEMS WITHOUT WRITTEN PERMISSION.
COPYRIGHT © 1977 DIGITAL EQUIPMENT CORPORATION"

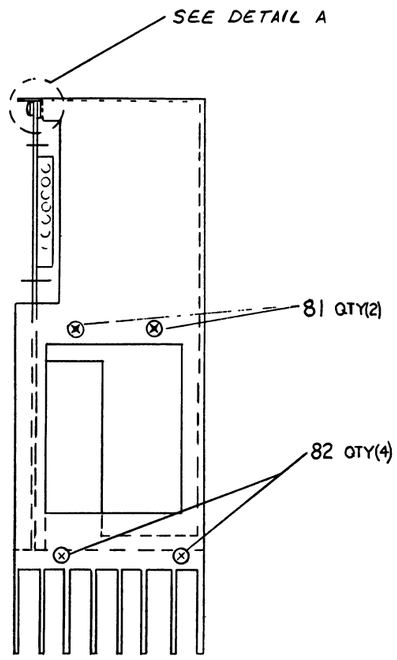

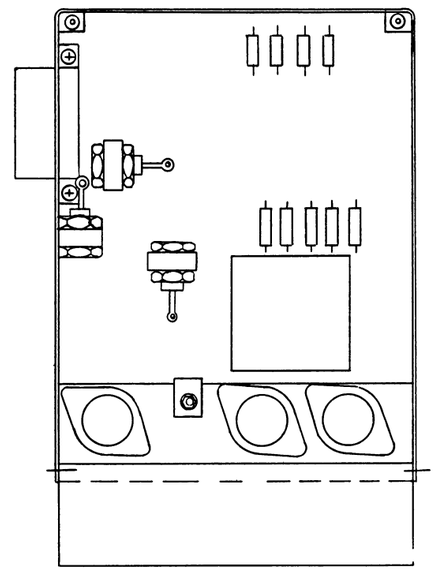

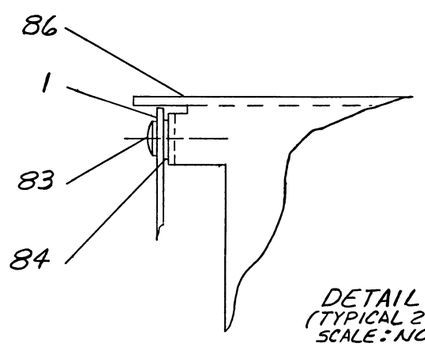

DETAIL A
(TYPICAL 2 PLACES)
SCALE: NONE

REVISIONS		
CHK	CHANGE NO	REV.

TITLE	SIZE	CODE	NUMBER	REV.
H785 BATTERY BACKUP REGULATOR	D	UA	5412343-0-0	F
SCALE 1-1	SHEET 5 OF 5		DIST.	

SIZE D CODE UA NUMBER 5412343-0-0 REV. F

LINE	ITEM	DOCUMENT NO.	PART NO.	DESCRIPTION	QTY	REFERENCE DESIGNATORS
1	1	D-MD-5012342-0-0	5012342-00	ETCH BRD 54-12343	1	
2	2		1002431-00	2.2MFD 35V 10% 150S S.TA (10-00	1	C10
3	3		1012607-02	180 MFD 50V H% 672D AL EL	3	C3-C5
4	4		1000042-00	1000.0 MMF 100V 5%200PPM DM15S (10-00	1	C7
5	5		1010646-00	.015 MFD 50V 2% M.POLYCARB	1	C8
6	6		1000024-00	470.0 MMF 100V 5%200PPM DM15S (10-00	1	C9
7	7		1001776-00	1 MFD 35V 10% 150D S.TA (10-00	2	C6,C11
8	8		1012607-00	560 MFD 20V H% 672D AL EL	3	C12-C14
9	9		1012607-01	1200 MFD 6.3V H% 672D AL EL	1	C15
10	10		1010621-00	.1 MFD 50V 20% Z5U DISC	2	C16,C19
11	11		1004813-00	10 MFD 20V 10% 150D S.TA (10-00	2	C1,C17
12	12		1000030-00	.1 MFD 100V 20% Z5U DISC	1	C18
13	13	BLANK			0	
14	14		1100125-00	1N 758A VZ= 10.0 5% .40W PPER S.A.V.E(	2	D2,D3
15	15		1105275-00	D 672 TR= 15NS PIV= 60V SP	7	D1,D4-D8,D20
16	16		1109440-00	1N 3880 PIV=100 I= 6A D04 SM	6	D10,D11,D13-D16
17	17		1113366-00	IN 3880R PIV=100 I=6A $	4	D17,D18,D9,D12
18	18		1105648-00	1N 4744 VZ= 15.0 10% 1W Y	1	D19
19	19	BLANK			0	
20	20		1211004-02	SOCKET,100 20POS EDGE MOUNT	1	P4
21	21		1209340-00	MATE-N-LOK 8PIN,HOUSING,SKT	2	J1,J2
22	22		1209456-01	MATE-N-LOK SKT PCB TAB LOOSE	16	
23	23		1211342-02	MATE-N-LOK 2PIN PC TYPE	2	J5,J6
24	24		1209219-01	LAMP 6V@200MA,T1-3/4PINS#2319	1	I1
25	25	BLANK			0	
26	26		1300202-00	47 1/4W 5% CC (13-00	1	R2
27	27		1309639-00	200 5W 5% WW (13-00	1	R3
28	28		1312682-00	3 3W 5% (13-00	1	R4
29	29		1302950-00	1.2 K 1W 10% CC (13-00	1	R5
30	30		1300426-00	2.7 K 1/4W 5% CC (13-00	2	R6,R7

REVISION HISTORY			VARIATIONS FOR THIS ASSY.	FIRST USED ON:		DIGITAL EQUIPMENT CORPORATION MAYNARD, MASSACHUSETTS		
CHK	ECO NO	REV	00					
B.N	00004	F		MADE BY: D BILODEAU	DATE: 31-JUL-78	TITLE PARTS LIST H785 BATTERY BACKUP REGULATOR		
				CHECKED: R PUZZO	DATE: 31-JUL-78			
				DSN.ENG.: J MERCURI	DATE: 31-JUL-78	SIZE K	CODE PL	DOCUMENT NUMBER 5412343-0-DBP	REV F
				PROD.: B KING	DATE: 31-JUL-78			
				RESP.ENG.: J MERCURI	DATE: 31-JUL-78	ASSY.NO.: D-UA-5412343-0-0		EDIT# 3

"THIS DRAWING AND SPECIFICATIONS HEREIN, ARE THE PROPERTY OF DIGITAL EQUIPMENT CORPORATION AND SHALL NOT BE REPRODUCED OR COPIED OR USED IN WHOLE OR IN PART AS THE BASIS FOR THE MANUFACTURE OR SALE OF ITEMS WITHOUT WRITTEN PERMISSION. COPYRIGHT 1978. DIGITAL EQUIPMENT CORPORATION "

LINE	ITEM	DOCUMENT NO.	PART NO.	DESCRIPTION	QTY	REFERENCE DESIGNATORS
31	31		1309680-00	2.7 M 1/4W 5% CC (13-00	1	R8
32	32		1313712-00	.01 5W 3% WW (13-00	1	R9
33	33		1300365-00	1 K 1/4W 5% CC (13-00	2	R1,R11
34	34		1300229-00	100 1/4W 5% CC (13-00	1	R12
35	35		1302466-00	100 K 1/4W 5% CC (13-00	2	R13,R14
36	36		1312464-00	2.21 K 1/2W 1% RN60D-F 100PPM (13-00	2	R15,R16
37	37		1313579-00	1.5 3W 5% WW (13-00	2	R17,R18
38	38		1309855-00	300 2W 5% CC (13-00	2	R19,R20
39	39		1300479-00	10 K 1/4W 5% CC (13-00	1	R21
40	40		1310852-00	200 20% POT S	1	R22
41	41		1300391-00	1.5 K 1/4W 5% CC (13-00	1	R10
42	42		1300316-00	470 1/4W 5% CC (13-00	1	R24
43	43	BLANK			0	
44	44	BLANK			0	
45	45		1510969-00	2N 5038 NPN 140WC SI 90 50 Y	3	Q1-Q3
46	46		1510708-00	D 45HP PNP 50WT SI 60 60 Y	2	Q4,Q8
47	47		1512790-00	D 44C11 NPN 30W SI 80 40	2	Q5,Q9
48	48		1511686-00	DEC5433 FET N 350MW 10 25 1A 20U	1	Q6
49	49		1510959-00	2N 3725 NPN 3.5WC SI 50 60 P	1	Q7
50	50	BLANK			0	
51	51		1612593-00	500 UP 6A S	1	L1
52	52		1613874-00	CHOKE,15UH 4A	2	L2,L3
53	53		1613876-00	XFMR,POWER,RATIO 1:2 7PIN S	1	T1
54	54		1613875-00	XFMR,POWER,RATIO 1:2:3 100UH	1	T2
55	55		7013690-00	CABLE 2 PIN AC DC LOW	1	
56	56		1911944-00	555CN TIMER,FUNCT.BLOCK	1	E1
57	57		1910282-00	301AN OP AMP	1	E2
58	58		7013384-10	10 CONDUCTOR EXTENDER CABLE	1	
59	59		1213071-06	INSULATOR,RUBBER SILICONE	1	
60	60		1213071-05	INSULATOR,RUBBER THERMAL	3	
61	61		7417414-00	HEAT SINK (DUAL)	4	
62	62		7417413-00	HEAT SINK (SINGLE)	1	
63	63		9006655-00	WASHER, FLAT, .312 O.D. X .125 ID X .025 T	1	
64	64		9006656-00	WASHER, FLAT, .312 O.D. X .156 I.D. X .027	6	
65	65		9006706-00	WASHER, NYLON, FLAT #4 .375 OD X .031 THK	2	
66	66		9006745-00	EYELET, ROLLED FLANGE, .120 OD X .260 LG	4	
67	67		1213071-02	INSULATOR,RUBBER SILICONE SM	3	
68	68		9006565-00	NUT,KEP , 10-32X 3/8 AF CS/	10	
69	69		1210737-04	HEAT SINK,REGULATOR	1	
70	70		9007793-04	SCREW,PIND,SLOT, 6-32X 9/16 SS/PAS	6	
71	71		9007649-00	******** THIS ITEM IS NOT USED *********	-	
72	72		9008185-00	NUT,KEP , 6-32X1/4 AF CS/	6	
73	73		9008033-71	SCREW,PAN ,PHIL, 4-40X 9/16 SS/PAS	1	
74	74		9006557-00	NUT,KEP , 4-40X 1/4 AF CS	1	
75	75		9006632-00	WASHER,LOCK,INT,.260OD X .120ID X .015 THK	8	
76	76		9006010-04	SCREW,PIND,SLOT, 4-40X 5/16 SS/PAS	8	
77	77		9107430-02	WIRE,STRND,18AWG,IPVC (UL1429) (91-00 A/R		
78	78		9009185-00	JUMPER, WIRE, INSULATED, BLACK BAND	1	W1

	TITLE	SIZE	CODE	DOCUMENT NUMBER	REV
DIGITAL EQUIPMENT CORPORATION MAYNARD, MASSACHUSETTS	PARTS LIST H785 BATTERY BACKUP REGULATOR	K	PL	5412343-0-DBF	F

LINE	ITEM	DOCUMENT NO.	PART NO.	DESCRIPTION	QTY	REFERENCE DESIGNATORS
79	79		9008506-00	TERM LUG 1POS SOLDER,FLAT	2	
80	80		9009149-00	PIN, STAKING, P.C. BOARD, .025 X .025	9	J3
81	81		9008404-02	SCREW,FLAT,PHIL, 6-32X 5/16 SS/PAS 100D	2	
82	82		9009142-02	SCREW, PHILLIPS FLAT HEAD, SELF TAP, 4-40	4	
83	83		9006010-01	SCREW,PAN ,PHIL, 4-40X 5/16 SS/PAS	2	
84	84		9008079-00	WASHER, FLAT FIBER OD, 1/4	2	
85	85		9905212-00	CARTON, DIE CUT 2412 100	1	
86	86	D-IA-7417410-0-0	7417410-00	REGULATOR BRACKET	1	
87	87		9009769-00	WASHER, RECTANGULAR .405X.225X.060	1	
88	88		9007201-00	TRANSIPADS #10253	1	
89	89		9009731-03	CAP,PLASTIC	7	

	TITLE	SIZE	CODE	DOCUMENT NUMBER	REV
DIGITAL EQUIPMENT CORPORATION MAYNARD, MASSACHUSETTS	PARTS LIST H785 BATTERY BACKUP REGULATOR	K	PL	5412343-0-CBP	F

"THIS DRAWING AND SPECIFICATIONS, HEREIN, ARE THE PROPERTY OF DIGITAL EQUIPMENT CORPORATION AND SHALL NOT BE REPRODUCED OR COPIED OR USED IN WHOLE OR IN PART AS THE BASIS FOR THE MANUFACTURE OR SALE OF ITEMS WITHOUT WRITTEN PERMISSION. COPYRIGHT © 1976 DIGITAL EQUIPMENT CORPORATION"

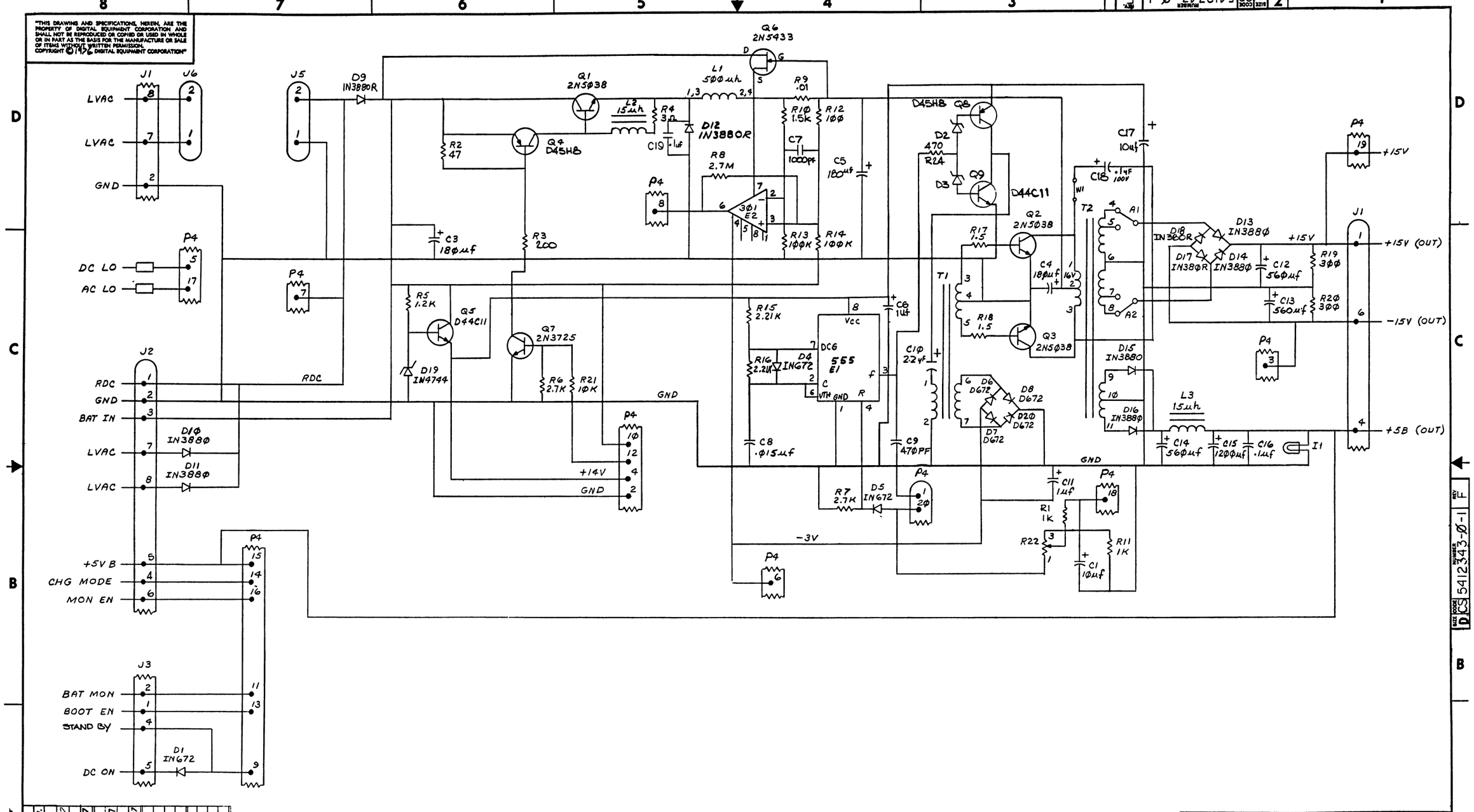

REVISIONS			
CHK	CHANGE NO.	REV.	
M.T.	5412343-00001	C	G. POTTER
			Joe Mercuri 7-6-77
K.W.	5412343-00002	D	G. POTTER
A. Chasser	22 July 77		Joe Mercuri 2-AUG-77
M.T.	5412343-00003	E	J. MERCURI
A. Chasser	20 DEC 77		Joe Mercuri 21 DEC 77
M.T.	5412343-MI0241	F	W.F. HAU HA

DRN.	8-20-76	FIRST USED ON
CHK'D	5-24-77	digital
ENG.	2-8-77	TITLE
PROJ. ENG.	2-9-77	H785 BATTERY BACKUP REGULATOR
PROD.	2-8-77	
NEXT HIGHER ASSY.		
SCALE	—//—	SIZE D · CODE CS · NUMBER 5412343-0-1 · REV. F
SHEET 1 OF 1		DIST.

THIS DRAWING AND SPECIFICATIONS, HEREIN, ARE THE PROPERTY OF DIGITAL EQUIPMENT CORPORATION AND SHALL NOT BE REPRODUCED OR COPIED OR USED IN WHOLE OR IN PART OR THE BASIS FOR THE MANUFACTURE OR SALE OF ITEMS WITHOUT WRITTEN PERMISSION.
COPYRIGHT © 1977 DIGITAL EQUIPMENT CORPORATION

REWORK INSTRUCTIONS

ECO #1

1-1 CUT ETCH BETWEEN R41 AND D16. (THIS ETCH LINE RUNS OVER TO THE DRAIN OF Q1Ø) SIDE 1.

1-2 CUT ETCH ON RIGHT SIDE OF C14, ON THE ETCH LINE THAT HAS PREVIOUSLY BEEN CUT, SIDE 1.

1-3 INSERT ECO WIRE FROM THE DRAIN OF Q1Ø TO THE LEFT SIDE OF C14, TACK SOLDER TO ETCH LINE ON THE LEFT SIDE OF C14, SIDE 1. (THIS IS THE SAME ETCH LINE THAT WAS CUT ON THE RIGHT SIDE OF C14). ECO WIRE IS TO BE ROUTED TO THE TOP OF THE BOARD FROM THE DRAIN OF Q1Ø THEN RUN ALONG THE BOARD AND COME DOWN TO THE LAND OF ETCH THAT IT HAS TO BE SOLDERED TO THE LEFT SIDE OF C14.

1-4 DRILL A .0635 DIA. HOLE (DRILL #52) BENEATH R32 (SIDE 1) MAKING SURE THE ONLY ETCH DRILLED IS THE ONE WITH BOTH ITS ENDS CUT (SEE STEPS 1 AND 2 OF REWORK INSTRUCTIONS). THIS HOLE HAS TO HOLD DEC. 12-12416-02. BE SURE OF SPACING BEFORE DRILLING.

1-5 DRILL A .0635 DIA. HOLE (DRILL #52) ABOVE Q1 TO THE LEFT SIDE OF R1, SIDE 1. BE SURE OF SPACING. THIS HOLE MUST HOLD DEC. 12-12416-02. DO NOT PIERCE ETCH ON SIDE 2.

1-6 ON SIDE 2, CUT ETCH LEADING AWAY FROM PIN 9 OF J4.

1-7 INSERT DEC. #12-12416-02 IN BOTH HOLES PREVIOUSLY DRILLED. DO NOT INSERT FULLY. INSERT SO THAT ENOUGH OF THE LEAD IS THROUGH THE BOARD THAT WILL PERMIT A COUPLE WRAPS OF AN ECO WIRE. THEN GLUE IN PLACE WITH DEC. 9009157. MAKE SURE THAT TABS ON DEC. 12-12416-02 ARE FACING EACH OTHER ON SIDE 1. (S1 AND S2)

1-8 ON DEC PART 12-12416-02 THE ONE THAT IS LOCATED CLOSEST TO J4 ON SIDE 1, CONNECT THE LEAD THAT GOES THROUGH THE BOARD, TO PIN J4-9 ON SIDE 2. THIS IS DONE WITH AN ECO WIRE INSTALLED ON SIDE 2.

1-9 WITH AN ECO WIRE, CONNECT BOTH CASE TABS OF DEC. 12-12416-02 ON SIDE 1 TOGETHER.

1-10 DEC PART 12-12416-02 THAT HAS BEEN INSTALLED BENEATH R32 ON SIDE 1. CONNECT AN ECO WIRE FROM THIS PARTS PIN ON SIDE 2 WITH THE OTHER END OF THE ECO WIRE GOING TO THE P.T.H BETWEEN R41 AND D16. (THIS P.T.H. HAS AN ETCH RUN CONNECTING THE ANODE OF D16 TO IT ON SIDE 2.)

1-11 CHANGE R1Ø FROM 13-13151 3.6K OHM TO 1300391 1.5K OHM

1-12 CHANGE R11 FROM 13-00316 47Ø OHM TO 13-00439 3.3K OHM.

1-13 CHANGE R4 FROM 13-00309 39Ø OHM TO 13-01322 18Ø OHM.

1-14 REMOVE W2 INSULATED JUMPER 90-09185.

1-15 REMOVE D17, IN 758A 11-00125

1-16 GLUE ALL ECO WIRES DOWN WITH DEC. 90-09157.

ECO #2

COMPONENT DELETES SIDE 1:

2-1. C15 (P/N 1000021)

2-2. D16 (P/N 1110068)

COMPONENT ADDS SIDE 1:

2-3. D16 (ZENER BI-DIRECTIONAL P/N 1119913-00)

NOTES:

1. COMPONENT NOT INSERTED

CHK	CHANGE NO	REV
	5412385-1	C
	G POTTER	
	5412385-2	D
	J. MERCURI	
	5412385-3	E
	G POTTER	

COMPONENT SIDE VIEW

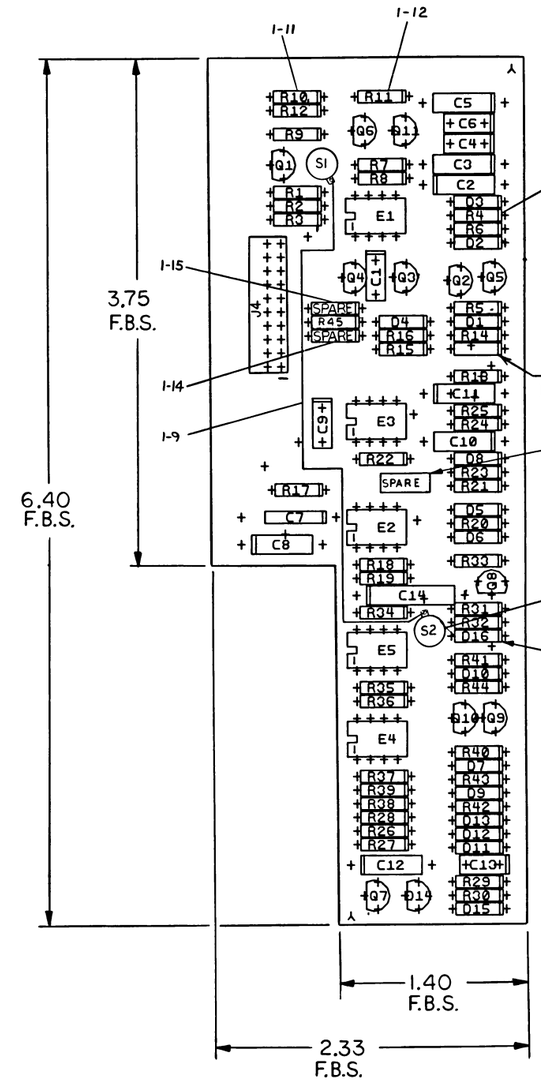

ETCH REV. C

P.C. DESIGN DATA BASE REV. C

SIGNATURES	DATE
DRN. F GAROFALO	12-8-76
CHK'D. F SEIDMAN	12-8-76
ENG.	17 DEC 76
PROJ. ENG.	17 DEC 76
PROD.	17 DEC 76

digital

TITLE H785 CONTROL BD.

SCALE 2/1 | SIZE D | CODE UA | NUMBER 5412385-Ø-Ø | REV E

SHT. 1 OF 3

NEXT HIGHER ASSY. B-DD-5412385-Ø

MS# 6Ø944

"THIS DRAWING AND SPECIFICATIONS, HEREIN, ARE THE PROPERTY OF DIGITAL EQUIPMENT CORPORATION AND SHALL NOT BE REPRODUCED OR COPIED OR USED IN WHOLE OR IN PART AS THE BASIS FOR THE MANUFACTURE OR SALE OF ITEMS WITHOUT WRITTEN PERMISSION
COPYRIGHT ©1977 DIGITAL EQUIPMENT CORPORATION"

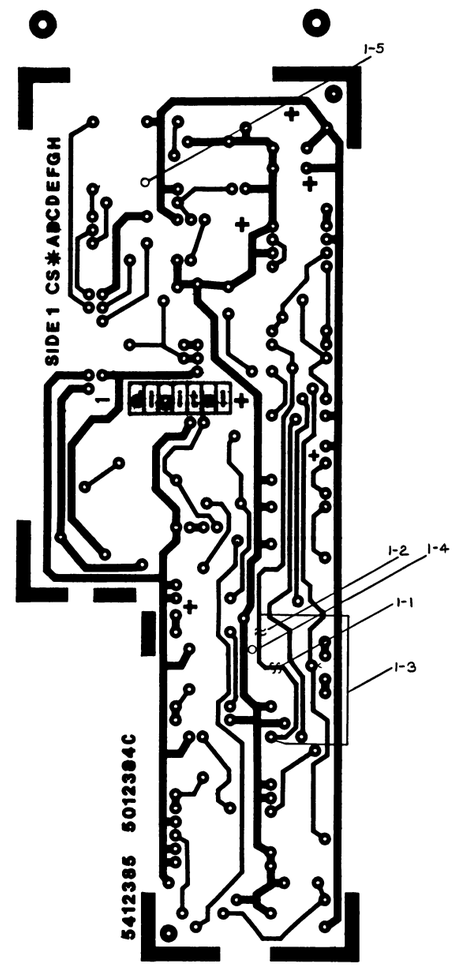

REVISIONS		
CHK	CHANGE NO	REV

TITLE	SIZE	CODE	NUMBER	REV.
H785 CONTROL BD	D	UA	5412385-Ø-Ø	E
SCALE 2/1	SHEET 2 OF 3	DIST		

DEC FORM NO DRD 137

"THIS DRAWING AND SPECIFICATIONS HEREIN ARE THE PROPERTY OF DIGITAL EQUIPMENT CORPORATION AND SHALL NOT BE REPRODUCED OR COPIED OR USED IN WHOLE OR IN PART AS THE BASIS FOR THE MANUFACTURE OR SALE OF ITEMS WITHOUT WRITTEN PERMISSION.
COPYRIGHT ©1977 DIGITAL EQUIPMENT CORPORATION"

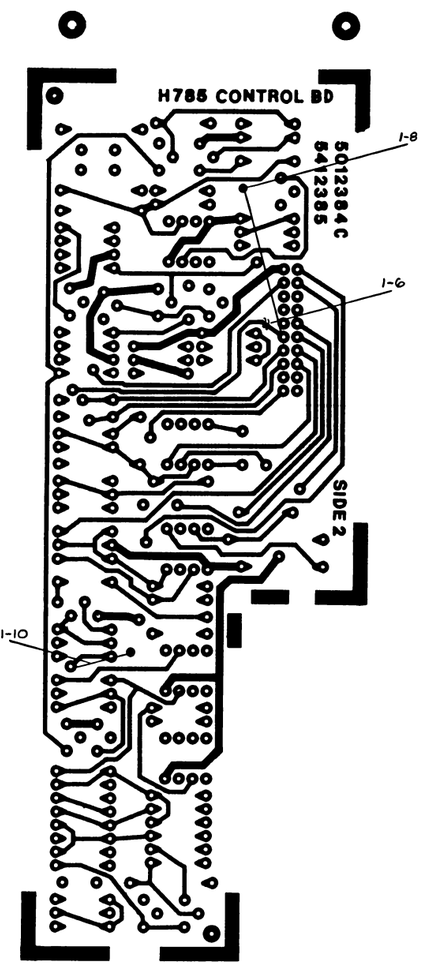

REVISIONS		
CHK	CHANGE NO	REV

TITLE	SIZE	CODE	NUMBER	REV.
H785 CONTROL BD	D	UA	5412385-Ø-Ø	E
SCALE 2/1 SHEET 3 OF 3	DIST			

DEC FORM NO DRD 137

LINE	ITEM	DOCUMENT NO.	PART NO.	DESCRIPTION	QTY	REFERENCE DESIGNATORS
1	1	D-MD-5012384-0-0	5012384-00	5412385	1	
2	2		1001610-01	.01 MFD 100V OR 50V Z5U DISC/800PF MIN	4	C1,C4,C6,C13
3	3		1004813-00	10 MFD 20V 10% 150D S.TA (10-00	1	C2
4	4		1001776-00	1 MFD 35V 10% 150D S.TA (10-00	3	C3,C5,C11
5	5		1000061-00	8200.0 MMF 100V 10% 663UW MYLR (10-00	1	C7
6	6		1005965-00	.47 MFD 35V 10% 150D S.TA (10-00	2	C8,C12
7	7		1000009-00	33.0 MMF 100V 5%200PPM DM15S (10-00	1	C9
8	8		1005306-00	6.8MFD 35V 10% 150D S.TA (10-00	1	C14
9	9		1105275-00	D 672 TR= 15NS PIV= 60V SP	9	D1,D2,D3,D5,D6,D9,D10,D12,D13
10	10		1109988-00	1N 964B VZ= 13.0 5% .40W Y	1	D4
11	11		1102808-00	1N 752A VZ= 5.6 5% .40W P	2	D11,D15
12	12		1110968-00	2N 5062 SCR@100V I=.8A T092	1	D14
13	13		1110713-00	SZ710910 VZ= 5.1 2% M	1	D7
14	14		1114913-00	VZ= 18.0 10% 1W	1	D16
15	15		1300398-00	1.8 K 1/4W 5% CC (13-00	2	R32,R38
16	16		1300479-00	10 K 1/4W 5% CC (13-00	11	R1,R13,R18,R19,R20,R21,R28,
					CONT	R31,R42-R44
17	17		1300229-00	100 1/4W 5% CC (13-00	5	R3,R5,R25,R29,R45
18	18		1301322-00	180 1/4W 5% CC (13-00	1	R4
19	19		1302177-00	47 K 1/4W 5% CC (13-00	1	R6
20	20		1302394-00	30 K 1/4W 5% CC (13-00	1	R7
21	21		1302091-00	330 K 1/4W 5% CC (13-00	1	R8
22	22		1300365-00	1 K 1/4W 5% CC (13-00	6	R2,R9,R12,R14,R37,R40
23	23		1300426-00	2.7 K 1/4W 5% CC (13-00	1	R16
24	24		1302092-00	220 K 1/4W 5% CC (13-00	1	R15
25	25		1301423-00	6.8 K 1/4W 5% CC (13-00	1	R17
26	26		1302871-00	1.21 K 1/4W 1% RN55D-F 100PPM (13-00	1	R35
27	27		1302955-00	750 1/4W 1% RN55D-F 100PPM (13-00	1	R34
28	28		1303312-00	10.0 K 1/4W 1% RN55D-F 100PPM (13-00	1	R36
29	29		1302466-00	100 K 1/4W 5% CC (13-00	3	R22,R39,R41

REVISION HISTORY			VARIATIONS FOR THIS ASSY.
CHK	ECO NO	REV	
			00
W,H	00003	E	

FIRST USED ON:

MADE BY:	F.MALANSON	DATE: 21-FEB-78	
CHECKED:	F.SEIDMAN	DATE: 21-FEB-78	
DSN.ENG.:	J.MERCURI	DATE: 21-FEB-78	
PROD.:	R.B.KING	DATE: 21-FEB-78	
RESP.ENG.:	J.MERCURI	DATE: 21-FEB-78	

DIGITAL EQUIPMENT CORPORATION
MAYNARD, MASSACHUSETTS

TITLE
PARTS LIST

H785 CONTROL BOARD

SIZE	CODE	DOCUMENT NUMBER	REV
K	PL	5412385-0-0	E

ASSY.NO.: D-UA-5412385-0-0 EDIT# 4

*THIS DRAWING AND SPECIFICATIONS HEREIN, ARE THE PROPERTY OF DIGITAL EQUIPMENT CORPORATION AND SHALL NOT BE REPRODUCED OR COPIED OR USED IN WHOLE OR IN PART AS THE BASIS FOR THE MANUFACTURE OR SALE OF ITEMS WITHOUT WRITTEN PERMISSION.
COPYRIGHT 1978, DIGITAL EQUIPMENT CORPORATION *

LINE	ITEM	DOCUMENT NO.	PART NO.	DESCRIPTION	QTY	REFERENCE DESIGNATORS
30	30		1300271-00	220 1/4W 5% CC (13-00	1	R26
31	31		1303179-00	8.2 K 1/4W 5% CC (13-00	1	R27
32	32		1302751-00	30 1/4W 5% CC (13-00	1	R30
33	33		1309417-00	27.4 K 1/4W 1% RN55D-F 100PPM (13-00	1	R33
34	34		1503409-00	DEC6534D PNP 310MW SI 40 90 P	4	Q1,Q4,Q7,Q8
35	35		1510233-00	2N 5460 FET 310MW SIP CHNNL	1	Q2
36	36		1511686-00	DEC5433 FET N 350MW 10 25 1A 20U	4	Q3,Q9,Q10,Q11
37	37		1509338-00	DEC6531B NPN 310MW SI 40 90 P	1	Q5
38	38		1510705-00	XA 05 NPN 500MW SI 60 50 P	1	Q6
39	39		1911944-00	555CN TIMER,FUNCT.BLOCK	2	E1,E2
40	40		1910282-00	301AN OP AMP	3	E3,E4,E5
41	41		1300391-00	1.5 K 1/4W 5% CC (13-00	2	R10,R24
42	42		1213335-00	HEADER 20POS RT ANGLE FOR 12-13334	1	J4
43	43		1300439-00	3.3 K 1/4W 5% CC (13-00	1	R11
44	44		1212416-02	THERMOSTAT,0@160,N/C,SPST,AUTO RESET	2	S1,S2
45	45		1300432-00	3 K 1/4W 5% CC (13-00	1	R23
46	46		1109990-00	1N 757A VZ= 9.1 5% .40W P	1	D8
47	47		1005965-00	.47 MFD 35V 10% 150D S.TA (10-00	1	C10
48	48		9009157-00	ADHESIVE, PERMABOND #101	A/R	
49	49		9105740-55	WIRE(WRAP)30AWG UL1423 (91-00	A/R	

DIGITAL EQUIPMENT CORPORATION MAYNARD, MASSACHUSETTS	TITLE PARTS LIST H785 CONTROL BOARD	SIZE K	CODE PL	DOCUMENT NUMBER 5412385-0-0	REV E

"THIS DRAWING AND SPECIFICATIONS, HEREIN, ARE THE PROPERTY OF DIGITAL EQUIPMENT CORPORATION AND SHALL NOT BE REPRODUCED OR COPIED OR USED IN WHOLE OR IN PART AS THE BASIS FOR THE MANUFACTURE OR SALE OF ITEMS WITHOUT WRITTEN PERMISSION.
COPYRIGHT © 1976, DIGITAL EQUIPMENT CORPORATION"

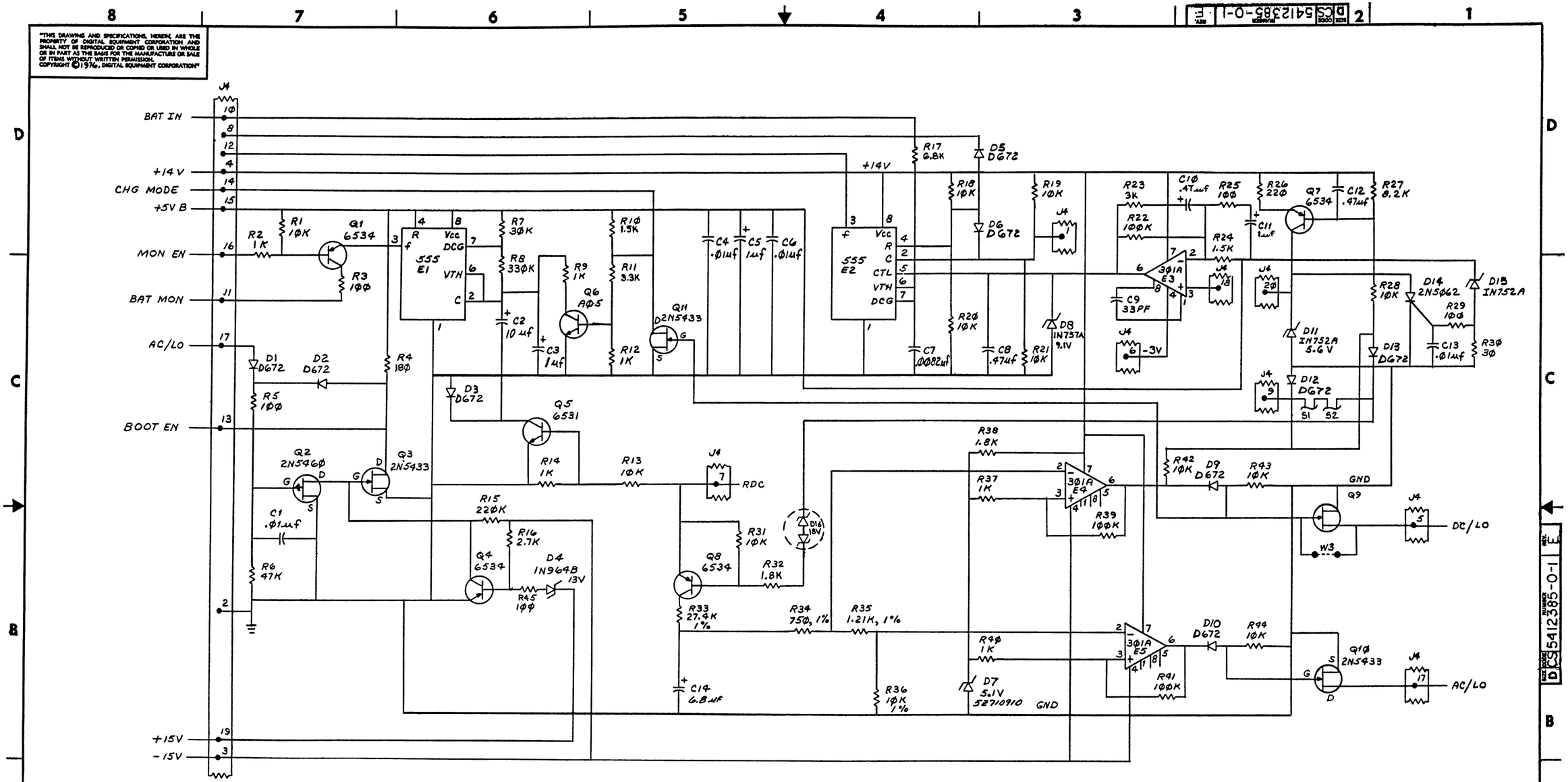

NOTES:

~~1. H785, 15V OPERATION REMOVE JUMPER W2.~~
~~2. H785C, 12V OPERATION REMOVE JUMPER W1.~~
~~W3 IS AN ENGINEERING OPTION TO BE DETERMINED AT A LATER DATE.~~

REVISIONS			
CHK	CHANGE NO.		REV.
	5412385-00001		C
	GEOF POTTER		
	5412385-00002		D
	J. MERCURI		
	5412385-00003		E
	G. POTTER		

DRN.		8-17-76	FIRST USED ON
CHK'D			digital
ENG.			TITLE H785 CONTROL BOARD
PROJ. ENG.			
PROD.			
NEXT HIGHER ASSY.			
SCALE	—		SIZE D · CODE CS · NUMBER 5412385-0-1 · REV. E
SHEET	1 OF 1		DIST.

THIS DRAWING AND SPECIFICATIONS, HEREIN, ARE THE PROPERTY OF DIGITAL EQUIPMENT CORPORATION AND SHALL NOT BE REPRODUCED OR COPIED OR USED IN WHOLE OR IN PART AS THE BASIS FOR THE MANUFACTURE OR SALE OF ITEMS WITHOUT WRITTEN PERMISSION.
COPYRIGHT © 1978 DIGITAL EQUIPMENT CORPORATION

COMPONENT SIDE VIEW

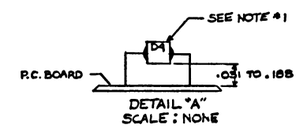

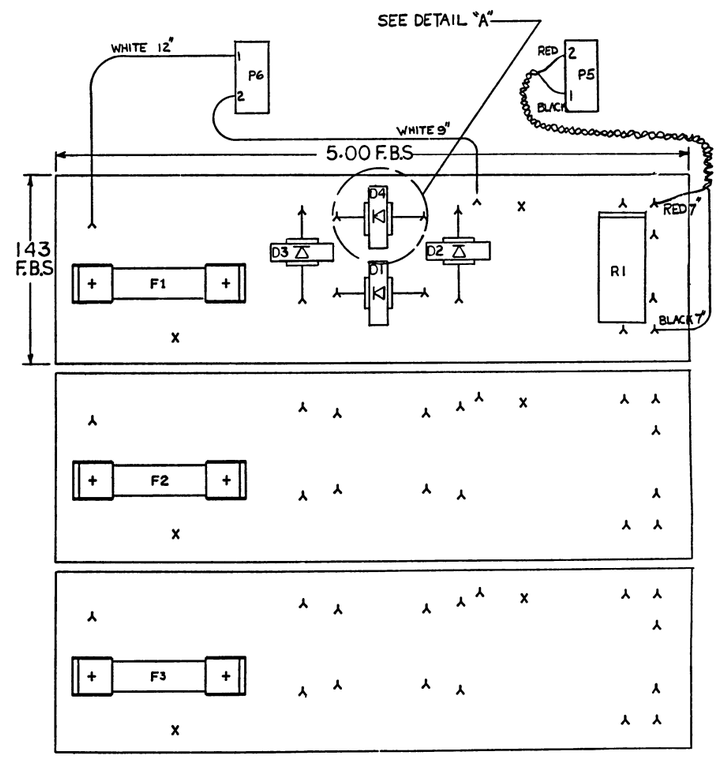

NOTES: DIODES D1—D4 MUST BE RAISED FROM THE P.C. BOARD .031 TO .188.

CHK	CHANGE NO	REV
CL	ML004 CARTER W.BAUSHA	F

ETCH REV. D - P.2
P.C. DESIGN DATA BASE REV. D

SIGNATURES	DATE
DRN. R. NICHOLLS	11-14-78
CHK'D.	11-20-78
ENG.	1/12/79
PROJ. ENG	1/12/79
PROD. G. Marcoux (JEC)	1/12/79
SCALE 2/1	
SHT. 1 OF 3	
NEXT HIGHER ASSY.	

digital

TITLE INPUT RECTIFIER BOARD

SIZE	CODE	NUMBER	REV
D	UA	5412411-0-0	F

M8600B4 8012410D – P2 5412411

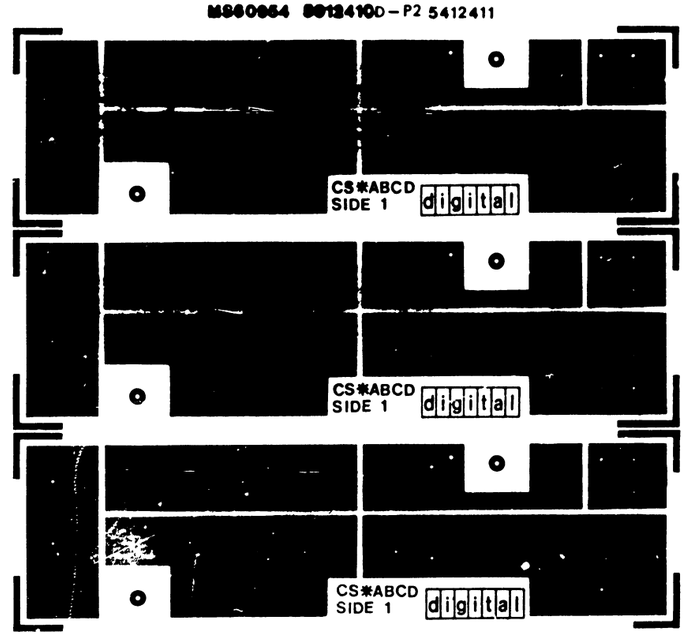

TITLE	SIZE	CODE	NUMBER	REV
INPUT RECTIFIER BOARD	D	UA	5412411-0-0	F
SCALE 2/1	SHEET 2 OF 3	DIST		

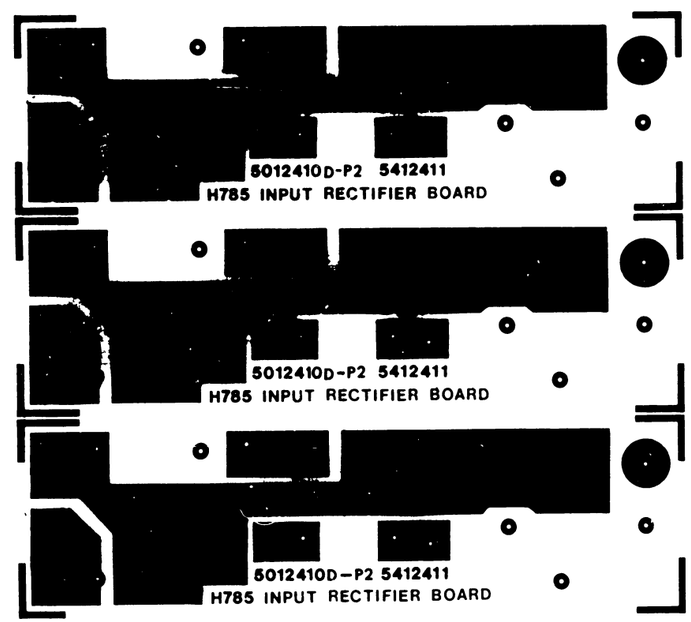

TITLE	SIZE	CODE	NUMBER	REV
INPUT RECTIFIER BOARD	D	UA	5412411-0-0	F
SCALE 2/1 SHEET 3 OF 3	DIST			

AUTOMATED BY PRTLST.3L(31) P A R T S L I S T SHEET A1 OF A1

LINE	ITEM	DOCUMENT NUMBER	PART NUMBER	DESCRIPTION	QTY PER VARIATION 00	REFERENCE DESIGNATOR
1	1	D-MD-5412410-0-0	5012410-00	5412411	1	
2	2		1110615-00	MR 752 PIV=200 I=22A A264 SM	4	D1-D4
3	3		1210821-02	MATE-N-LOK 2PIN HOUSING,SKT	2	P5,P6
4	4		1209379-01	MATE-N-LOK PIN 20-14AWG LOOSE	4	
5	5		1302609-00	4.7 K 2W 10% CC	1	R1
6	6		9009000-00	EYELET, ROLLED FLANGE, .121 OD X	2	
7	7		9008390-00	FUSE, REG BLOW, 10.000A, 250V, C	1	
8	8		9007203-00	CLIP, FUSE, WITH STOP, SCREW MOU	2	
9	9		9107360-99	WIRE,STRND,18AWG,IPVC UL1429	A/R	
10	10		9107430-02	WIRE,STRND,18AWG,IPVC (UL1429)	A/R	

REVISION HISTORY			BASIC PART NO: 5412411										
ENG	ECO NUMBER	REV	SECTION A OF A	DRN: D.BILODEAU	DATE: 09-MAY-79	D	I	G	I	T	A	L
J.M	5412411-ML004	F	SECTION.VARIATION INDEX	CHK'D: F.GAROFALO	DATE: 09-MAY-79	TITLE PARTS LIST						
			[A] 00			INPUT RECTIFIER BOARD						
			[B]									
			[C]	DES.ENG: J.MERCURI	DATE: 09-MAY-79							
			[D]									
			[E]			DOCUMENT NUMBER						
			[F]	RESP.ENG.: J.MERCURI	DATE: 09-MAY-79							
			[H]			SIZE	CODE	NUMBER			REV	
			[J]									
			[K]	MFG.ENG.: R.B.KING	DATE: 09-MAY-79	K	PL	5412411 0-DBP			F	
			[L]									
			[M]	ASSEMBLY NUMBER:	TOP DOCUMENT NUMBER:	FILE NAME:					EDIT #	
			[N]	D-UA-5412411-0-0		Z0474F.PLS					3	

"THIS DRAWING AND SPECIFICATIONS HEREIN, ARE THE PROPERTY OF DIGITAL EQUIPMENT CORPORATION AND SHALL NOT BE REPRODUCED OR COPIED OR USED IN WHOLE OR IN PART AS THE BASIS FOR THE MANUFACTURE OR SALE OF ITEMS WITHOUT WRITTEN PERMISSION. COPYRIGHT (C) 1979, DIGITAL EQUIPMENT CORPORATION "

THIS DRAWING AND SPECIFICATIONS HEREIN ARE THE PROPERTY OF DIGITAL EQUIPMENT CORPORATION AND SHALL NOT BE REPRODUCED OR COPIED OR USED IN WHOLE OR IN PART AS THE BASIS FOR THE MANUFACTURE OR SALE OF ITEMS WITHOUT WRITTEN PERMISSION.
COPYRIGHT © 1976 DIGITAL EQUIPMENT CORPORATION

NOTES:

1. C1 WILL BE CONNECTED TO BOARD AT NEXT HIGHER ASSEMBLY.

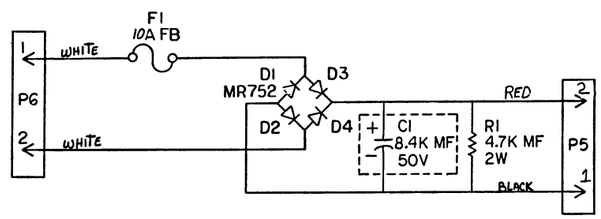

IC TYPE	GND	+5V
GND AND 5V ARE USUALLY PIN 7 AND 14 RESPECTIVELY EXCEPTIONS ARE STATED ABOVE		
IC PIN LOCATIONS		

QTY	REF. DESIGNATION	DESCRIPTION	PART NO.	ITEM NO.
		PARTS LIST		

FIRST USED ON OPTION MODEL

ETCH BOARD REV. D

DEC NO.	EIA NO.	DEC NO.	EIA NO.
SEMICONDUCTOR CONVERSION CHART			

REVISIONS		
REV.	CHANGE NO.	CHK
C	5412411-00003	P.C.

W.F. BAUSHA 4/30/79
W.F. BAUSHA 6-24-79
5412411-ML004 D
J.MERCURI
J. Chatten 6 June 78

DRN Frank Kerfoot DATE 7-15-76
CHKD Frank Kerfoot DATE -76
ENGR Joe Mercuri DATE 11-5-76
PROJ. ENG. Joe Mercuri DATE 11-5-76
PROD. W. Bolmer DATE 19 Dec 76
NEXT HIGHER ASSY
SCALE —/—
SHEET 1 OF 1

digital

TITLE INPUT RECTIFIER BOARD

SIZE D CODE CS NUMBER 5412411-Ø-1 REV. D
DIST.

DEC FORM NO. DRD 135.8

"THIS DRAWING AND SPECIFICATIONS, HEREIN, ARE THE PROPERTY OF DIGITAL EQUIPMENT CORPORATION AND SHALL NOT BE REPRODUCED OR COPIED OR USED IN WHOLE OR IN PART AS THE BASIS FOR THE MANUFACTURE OR SALE OF ITEMS WITHOUT WRITTEN PERMISSION.
COPYRIGHT © 1975 DIGITAL EQUIPMENT CORPORATION"

LEGEND		
NUMBER	DIM "X"	USED ON
7011413-3F	3FT 6IN ± 1IN	BA11-L OR K
7011413-7	7FT ± 2 IN	H9280
7011413-10	10FT 0IN ± 1IN	1104/34-TA

NOTES:

1. AFTER STRIPING OUTSIDE COVERING (1-1/4 IN.) FOLD BACK THE GROUND WIRE. (BARE ONE) AND REMOVE THE WRAPPER
2. COVER THE FOLDED BACK BARE WIRE. WITH ITEM #2 AND SHRINK (ON BOTH ENDS).
3. ADD ITEM #4 (CLEAR TUBING) OVER ITEM #1 (SHIELD) ON ONE END.
4. STAKE ITEM #3 (5 PLACES) ONTO ITEM #1

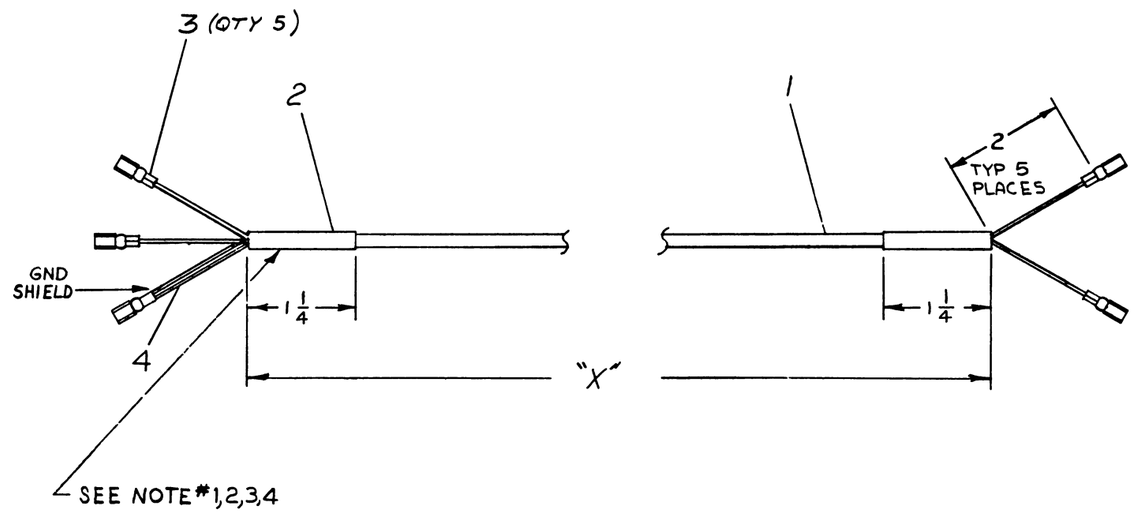

QTY.	DESCRIPTION	PART NO.	ITEM NO.
A/R	CLEAR TUBING	9107278-11	4
5	TERMINAL LUG FAST-ON (.RED)	9007917-00	3
A/R	TUBING SHRINK WHT 3/32	91-07254-09	2
A/R	WIRE SHIELDED #22 AWG	91-07703	1

PARTS LIST

FIRST USED ON OPTION/MODEL: SEE LEGEND

DIMENSIONAL TOLERANCE

DIMENSIONS ARE ~~MILLIMETERS~~ INCHES UNLESS OTHERWISE SPECIFIED

MILLIMETERS	INCHES	ANGLES
X.XX = ±0.10	.XXX = ±.005	±0° 30'
X.X = ±0.8	.XX = ±.02	
X = ±2	.X = ±.1	

THIRD ANGLE PROJECTION

REMOVE BURRS AND BREAK SHARP CORNERS SURFACE QUALITY ✓

MATERIAL: SEE PARTS LIST

FINISH: //

		DATE
DRN.	D. Shelton	6/11/75
CHK'D	D. Boyd	6/13/75
ENG.	R. Barry	6/16/75
PROJ. ENG.	R. Barry	6/16/75
PROD.	[illegible]	6/16/75

NEXT HIGHER ASSY.

SCALE NONE

SHEET 1 OF 1

digital

TITLE: CABLE, EXTERNAL BOOT, M9301

SIZE	CODE	NUMBER	REV.
C	IA	7011413-0-0	E

DIST.

REVISIONS

CHK	CHANGE NO.	REV.	
[illegible]	7011413-00001	A	[illegible]
[illegible]	7011413-00002	B	R. BARRY 9-2-75
[illegible]	7011413-00003	C	R. BARRY 11-25-75
D.C.	7011413-00004	D	R. BARRY 28 Jul 76
B. Chisson			R. BARRY 16 AUG 76
D. BARRY			R. BARRY 9 Sept 76
R. Barry	7011413-TW005	E	R. BARRY 23 Sept 76
B. Chisson			E. CROCKER 31 Jan 79
E. CROCKER			E. CROCKER 13 Feb 79

DEC FORM NO. DC 100-B

TW 1

"THIS DRAWING AND SPECIFICATIONS, HEREIN, ARE THE PROPERTY OF DIGITAL EQUIPMENT CORPORATION AND SHALL NOT BE REPRODUCED OR COPIED OR USED IN WHOLE OR IN PART AS THE BASIS FOR THE MANUFACTURE OR SALE OF ITEMS WITHOUT WRITTEN PERMISSION. COPYRIGHT © 1975 , DIGITAL EQUIPMENT CORPORATION"

LEGEND			
NUMBER	DIM "X" VARIATION	USED ON	KEY PIN
7011411-ØJ	8 IN ±.5 IN.	BA11-L ØR K	10 ONE END
7011411-ØK	9 IN ±.5 IN.	LS1-11	4 BOTH ENDS
7011411-1D	1 FT-4 IN ±1 IN.	KY11-LB	
7011411-2D	2 FT-4 IN ± 1 IN.	BA11-F/DD #PF	10 ONE END
7011411-ØH	7 IN ± .5 IN.	H79Ø, 1, 2, 3	
7011411-1J	1 FT.-8 IN ± 1 IN.	11Ø4/34-7A	
7011411-1L	1 FT. 10 IN. ± 1 IN.	BA11-L, H777	PIN 3 1 END
7011411-1A	1 FT.-1 IN ± 1 IN.	H787	4 BOTH ENDS
7011411-3J	3 FT.-8 IN ± 1 IN.	BA11-K, H785	
7011411-2J	2 FT.-8 IN ± 1 IN.	BA11K-H785	NO KEY
7011411-5F	5 FT.-6 IN ± 1 IN.	1160	8 ONE END
7011411-12	12 FT ± 3 IN.	KA57Ø	
7011411-7	7 FT ± 2 IN	11780	

NOTES:

1. INSERT KEY IN PROPER CONNECTOR PIN AND BREAK OFF TAB.
2. FOR ITEM (2) DRAWING IS SHOWING 3M CONNECTOR.

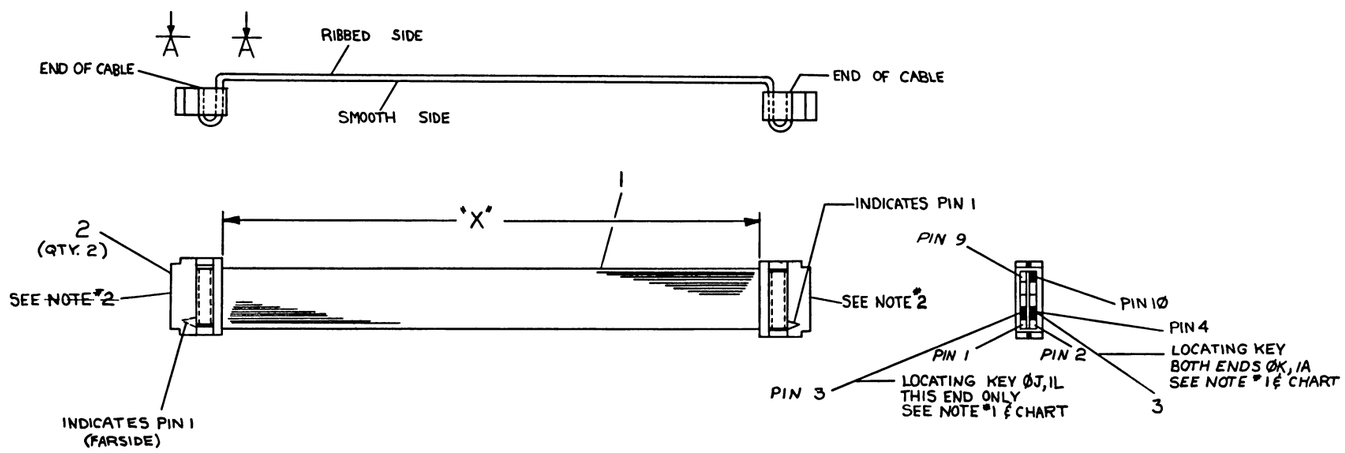

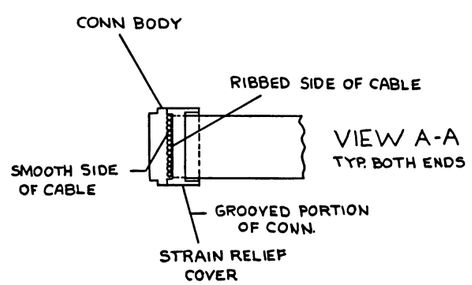

1	TIE, CABLE	9007031	5
1	LABEL, CABLE IDENT.	9009532	4
A/R	KEY	9009707	3
2	CONN. CRIMP	1211206-02	2
A/R	CABLE, 10 CONDUCT	9107747-02	1
	DESCRIPTION	DWG./PART NO.	ITEM NO.

7011411-0-0

QUANTITY & VARIATION

UNLESS OTHERWISE SPECIFIED DIMENSIONS ARE IN INCHES

ANGLES ±0° 30'	CLASS OF ACCURACY (CHECK ONE)	OVER 0 TO 0.3	OVER 0.3 TO 1.2	OVER 1.2 TO 4.0	OVER 4.0 TO 12.0	OVER 12.0 TO 40.0	OVER 40.0 TO 80.0
SURFACE QUALITY IN MICROINCHES	MEDIUM	±.004	±.008	±.012	±.016	±.024	±.04
	PREFERRED	±.012	±.016	±.025	±.04	±.063	±0.1

THIRD ANGLE PROJECTION

REMOVE BURRS AND BREAK SHARP CORNERS

DO NOT SCALE DWG

MATERIAL SEE PARTS LIST

FINISH

DRN	M. BAPTIST	5-20-75
CHK'D	D. HEALY	6-13-75
ENG.	R. BARRY	6-18-75
PROJ. ENG.	R. BARRY	6-18-75
PROD.	R. PETERSON	6-19-75

NEXT HIGHER ASSY.

SCALE NONE

SHEET 1 OF 1

FIRST USED ON SEE LEGEND

digital

TITLE CABLE CONSOLE BACKPLANE

SIZE	CODE	NUMBER	REV.
D	IA	7011411-0-0	N

DIST.

REVISIONS			
CHK	CHANGE NO.	REV.	
J.C.	7011411-00011	M	REDRAWN & REVISED STEVE RITTLE 26 MAY 77
	7011411-00012	N	K. DUGGAN
			E. ANTON 10 MAR 78
			E. ANTON 22 MAR 79

MASTERPIECE P-1997

DEC FORM NO. DEC 100-C

"THIS DRAWING AND SPECIFICATIONS, HEREIN, ARE THE PROPERTY OF DIGITAL EQUIPMENT CORPORATION AND SHALL NOT BE REPRODUCED OR COPIED OR USED IN WHOLE OR IN PART AS THE BASIS FOR THE MANUFACTURE OR SALE OF ITEMS WITHOUT WRITTEN PERMISSION. COPYRIGHT © 1975 DIGITAL EQUIPMENT CORPORATION"

WIRE TABLE

ITEM NO	DESCRIPTION AWG	DESCRIPTION COLOR	FROM POINT	FROM CONNECTION	FROM WITH	TO POINT	TO CONNECTION	TO WITH	SIGNAL
5	18	BLU	2	P1-1	2	7	—	4	
	TWP	BLK	1	P1-3	2	8	—	4	
6	18	RED	3	—	4	6	—	4	+5
	TWP	BLK	4	—	4	5	—	4	END

NOTES:

1. APPLY TIE WRAP (ITEM 3) EVERY 4 IN.

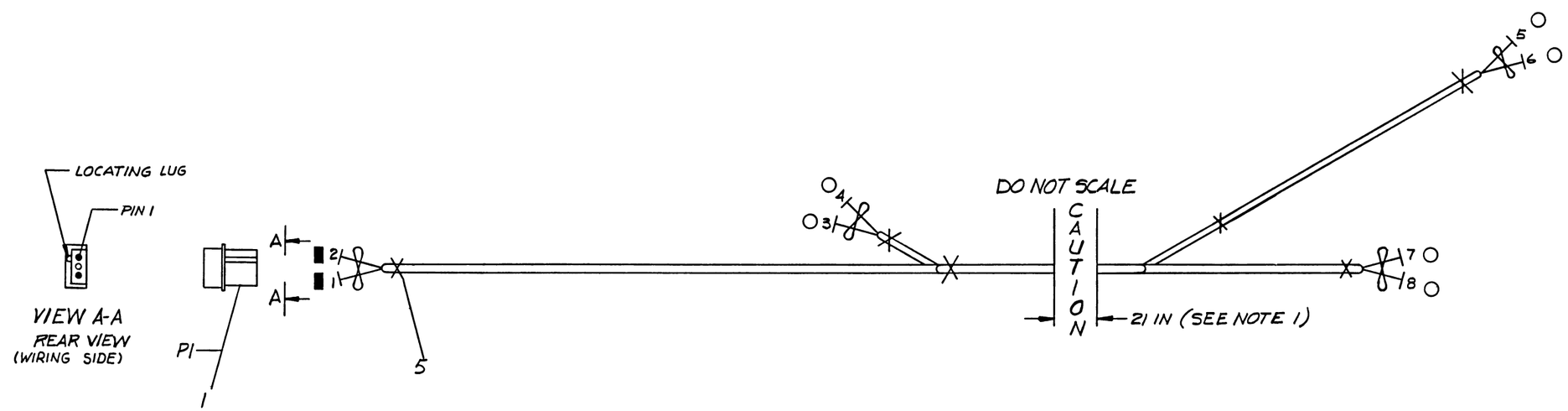

DO NOT REDUCE

SCALE

0 IN — 6 IN — 12 IN

FOR MANUFACTURING PURPOSES ONLY

	A/R	WIRE 18 AWG TWP BLK/RED	9107430-02	6
	A/R	WIRE 18 AWG TWP BLK/BLU	9107430-06	5
○	4	CONN SOLDERLESS (RED)	9007917	4
X	12	TIE WRAP 1 M	9007031	3
■	2	PIN MALE	1209378-01	2
	1	HOUSING, 3 PIN	12 09351-03	1
		DESCRIPTION	DWG./PART NO.	ITEM NO.

UNLESS OTHERWISE SPECIFIED DIMENSIONS ARE IN INCHES

CLASS OF ACCURACY (CHECK ONE)	OVER 0 TO 0.3	OVER 0.3 TO 1.2	OVER 1.2 TO 4.0	OVER 4.0 TO 12.0	OVER 12.0 TO 40.0	OVER 40.0 TO 80.0
MEDIUM	±.004	±.008	±.012	±.016	±.024	±.04
PREFERRED	±.012	±.016	±.025	±.04	±.063	±0.1

ANGLES ±0° 30'

SURFACE QUALITY IN MICROINCHES

SYMBOL

QUANTITY & VARIATION

THIRD ANGLE PROJECTION

REMOVE BURRS AND BREAK SHARP CORNERS

DO NOT SCALE DWG

MATERIAL: SEE PARTS LIST

FINISH: —

DRN. Williams 13/MAY/75

CHK'D. 13/MAY/75

ENG. NOV 3, 75

PROJ. ENG. NOV 23, 75

PROD.

NEXT HIGHER ASSY. E-UA-1134-0-0

SCALE —

SHEET 1 OF 1

FIRST USED ON 1134

digital

TITLE PDP1104/1134 CONSOLE POWER HARNESS

SIZE D | CODE IA | NUMBER 7011992-0-0 | REV.

DIST.

REVISIONS: CHK. | CHANGE NO. | REV.

FORM NO. 80-2

DIGITAL EQUIPMENT CORPORATION
MAYNARD, MASSACHUSETTS

PARTS LIST

MADE BY D. HEALY	CHECKED D. HEALY	SECTION 1
DATE 15 DEC 76	DATE 16 DEC 76	
ENG	PROD	ISSUED SECT. 1
DATE 17 JAN 77	DATE 1/17/77	

ITEM NO.	DWG NO./PART NO.	DESCRIPTION	DC, DD, LC, LD	HC, HD, MC, MD	DH, DJ, LH, LJ	HH, HJ, MH, MJ	DE, DF, LE, LF	HE, HF, ME, MF	EM, EN	JC, JD	JH, JJ	JE, JF		
	MPØØ19Ø	1134A FIELD MAINTENANCE PRINT SET	1	1	1	1	1	1	1	1	1	1		
	EK-1134A-OP	1134A SYSTEM USERS MANUAL	1	1	1	1	1	1	1	1	1	1		
	EK-KD11-EA-TM	KD11-EA PROCESSOR MANUAL *	1	1	1	1	1	1	1	1	1	1		
	EK-MS11E-MM	MS11-E-J MOS MEMORY MAINTENANCE MANUAL *	1	-	1	-	1	-	-	-	-	-		
	EK-MM11D-TM	MM11D/DP CORE MEMORY MANUAL *	-	1	-	1	-	1	-	-	-	-		
	EK-MS11K-MM	MS11-K MOS MEMORY MAINTENANCE MANUAL *	-	-	-	-	-	-	1	-	-	-		
	EK-BA11K-MM	BA11-K MAINTENANCE MANUAL *	-	-	1	1	1	1	1	-	1	1		
	EK-BA11L-MM	BA11-L MAINTENANCE MANUAL *	1	1	-	-	-	-	-	1	-	-		
	EK-M93Ø1-TM	M93Ø1 MAINTENANCE MANUAL * NOTE 1	1	1	1	1	1	1	1	1	1	1		
	EK-M785Ø-MM	M785Ø MAINTENANCE MANUAL *	1	1	1	1	1	1	1	1	1	1		
	EK-DL11W-MM	DL11-W MAINTENANCE MANUAL *	-	-	-	-	-	1	1	-	-	1		
	EK-KY11-LB-MM	KY11-LB MAINTENANCE MANUAL *	-	-	-	-	1	1	-	-	-	1		
	ZJØ1Ø-RB	SOFTWARE LIBRARY KIT (PAPER TAPE)	1	1	1	1	1	1	1	1	1	1		
	1211825	CHASSIS TRACKS AND MOUNTING HARDWARE	1	1	1	1	1	1	1	1	1	1		
	7010059	SHIPPING BRACKET	1	1	1	1	1	1	1	1	1	1		
	EK-MM11YP-TM	MM11YP MAINTENANCE MANUAL	-	-	-	-	-	-	-	1	1	1		
	EK-M9312-TM	M9312 MAINT. MANUAL * NOTE 1	1	1	1	1	1	1	1	1	1	1		
	23248F1	ROM, CONSOLE EMULATOR NOTE 2	1	1	1	1	1	1	1	1	1	1		
	NOTE 1. MANUAL	SHIPPED TO BE CONSISTENT WITH MODULE												
	SHIPPED	IN MACHINE.												
	2. CONSOLE	EMULATOR ROM IS TO BE SHIPPED ONLY IF M9312 IS SHIPPED.												
		* Do not ship to OEM. customers												

TITLE	ASSY NO.	SIZE	CODE	NUMBER	REV.	ECO NO.
1134A SHIPPING LIST	NONE	A	PL	1134A-Ø-4	C	1134A-000C9
	SHEET 1 OF 1	DIST.				

DEC FORM DRA 110 DEC 16-(325)-1031-N870

TW

"THIS DRAWING AND SPECIFICATIONS HEREIN ARE THE PROPERTY OF DIGITAL EQUIPMENT CORPORATION AND SHALL NOT BE REPRODUCED OR COPIED OR USED IN WHOLE OR IN PART AS THE BASIS FOR THE MANUFACTURE OR SALE OF ITEMS WITHOUT WRITTEN PERMISSION. COPYRIGHT © 1977 , DIGITAL EQUIPMENT CORPORATION"

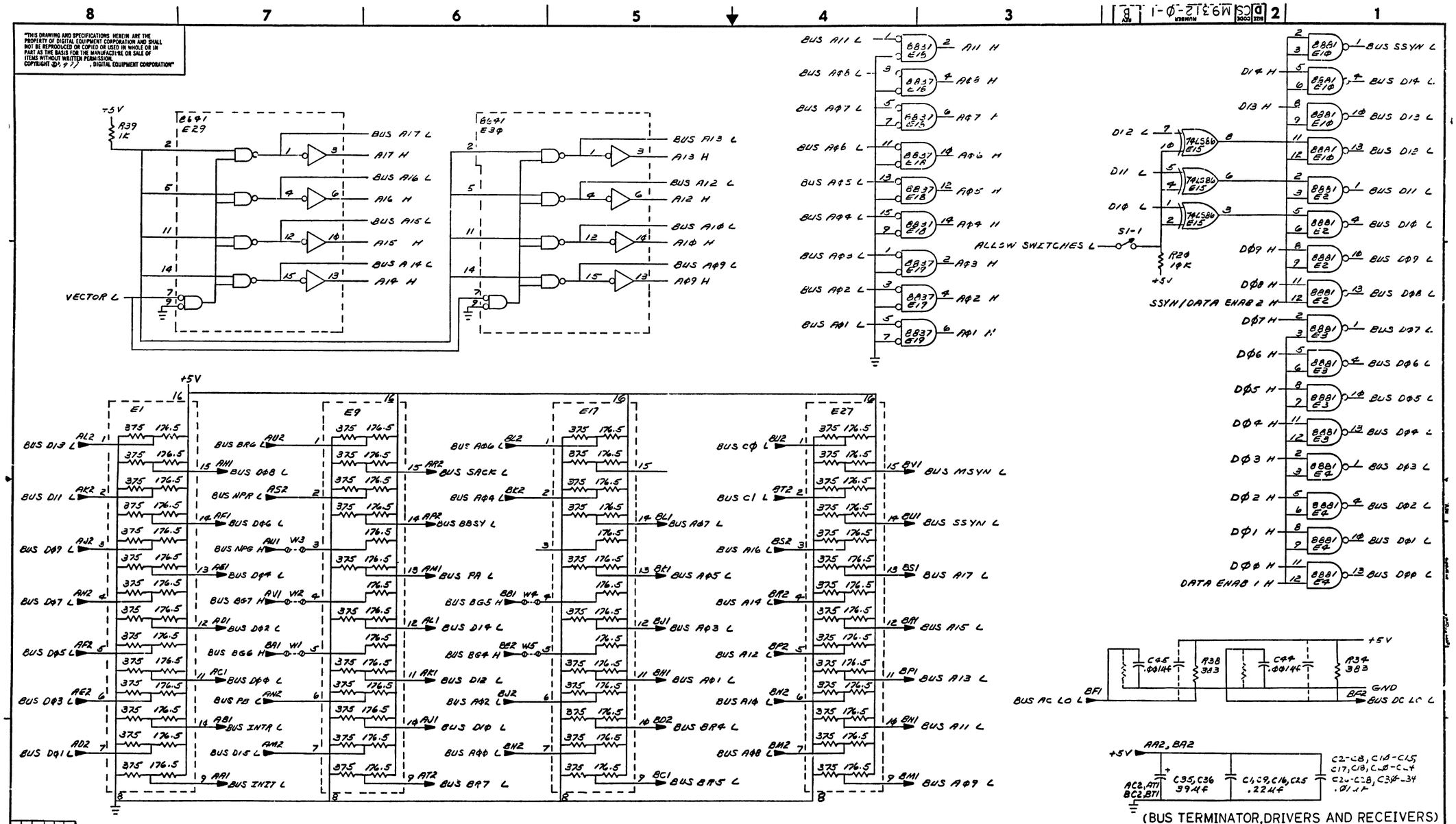

REVISIONS			
CHK	CHANGE NO.	REV	
	M9312-00001	B	
B. GIST			

DRN.		12-8-77
CHK'D		12-30-77
ENG.		12-30-77
PROJ ENG		1-26-78
PROD		1/26/78
NEXT HIGHER ASSY.		
SCALE		
SHEET	1 OF 4	

FIRST USED ON: digital

TITLE: BOOTSTRAP TERMINATOR

SIZE	CODE	NUMBER	REV.
D	CS	M9312-0-1	B

DIST.

DEC FORM NO DRD 102-0

"THIS DRAWING AND SPECIFICATIONS, HEREIN, ARE THE PROPERTY OF DIGITAL EQUIPMENT CORPORATION AND SHALL NOT BE REPRODUCED OR COPIED OR USED IN WHOLE OR IN PART AS THE BASIS FOR THE MANUFACTURE OR SALE OF ITEMS WITHOUT WRITTEN PERMISSION. COPYRIGHT © 1977 DIGITAL EQUIPMENT CORPORATION"

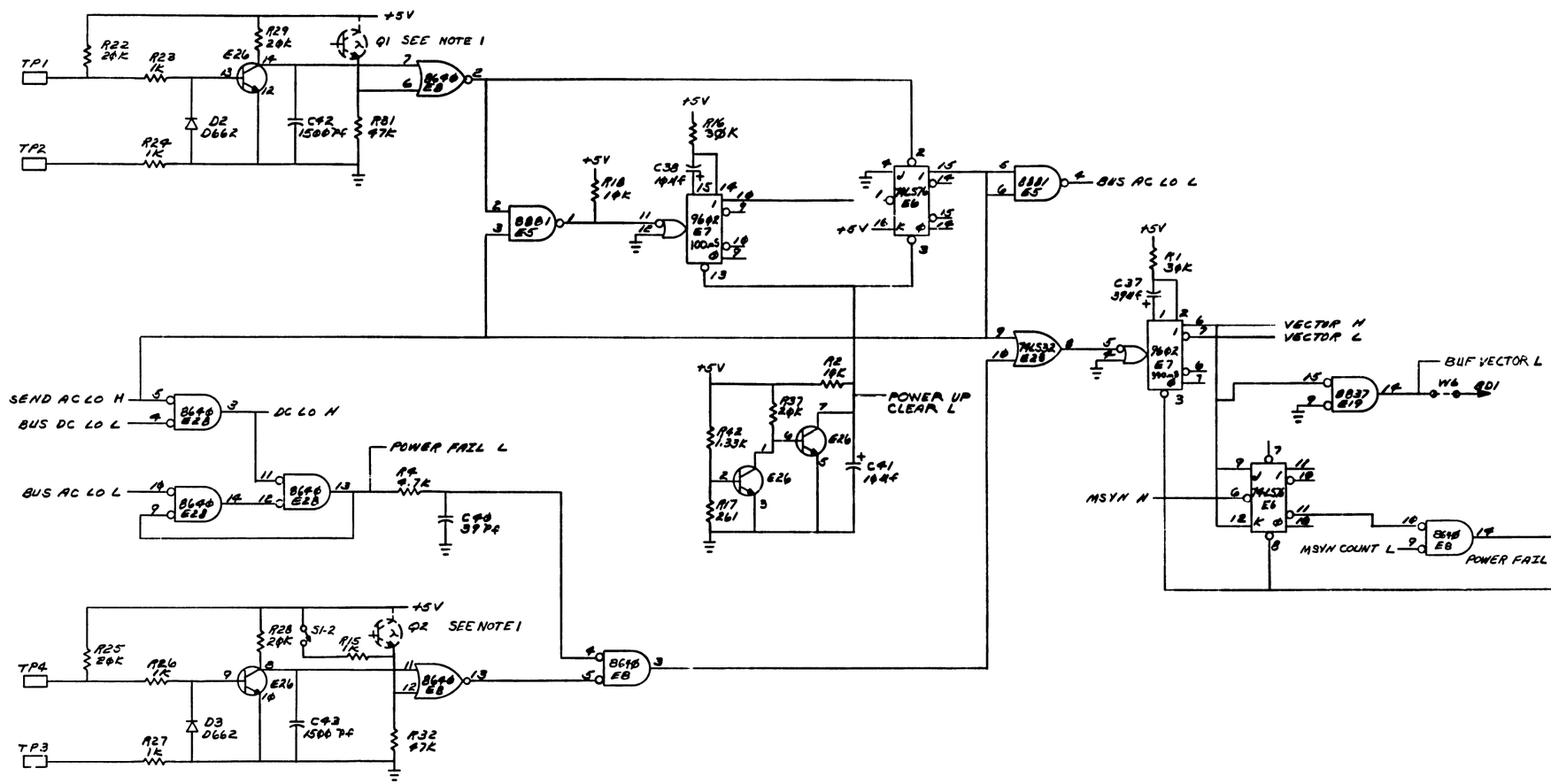

NOTES: 1. PHOTO TRANSISTORS Q1 AND Q2 DO NOT APPEAR ON THE PARTS LIST, THEY ARE INTENDED FOR FUTURE APPLICATIONS.

REVISIONS		
CHK	CHANGE NO.	REV.

(SWITCH FILTERS AND AC LO GENERATION)

TITLE	SIZE	CODE	NUMBER	REV.
BOOTSTRAP TERMINATOR	D	CS	M9312-Ø-1	B
SCALE	SHEET 2 OF 4	DIST.		

"THIS DRAWING AND SPECIFICATIONS, HEREIN, ARE THE PROPERTY OF DIGITAL EQUIPMENT CORPORATION AND SHALL NOT BE REPRODUCED OR COPIED OR USED IN WHOLE OR IN PART AS THE BASIS FOR THE MANUFACTURE OR SALE OF ITEMS WITHOUT WRITTEN PERMISSION.
COPYRIGHT © 1977 DIGITAL EQUIPMENT CORPORATION"

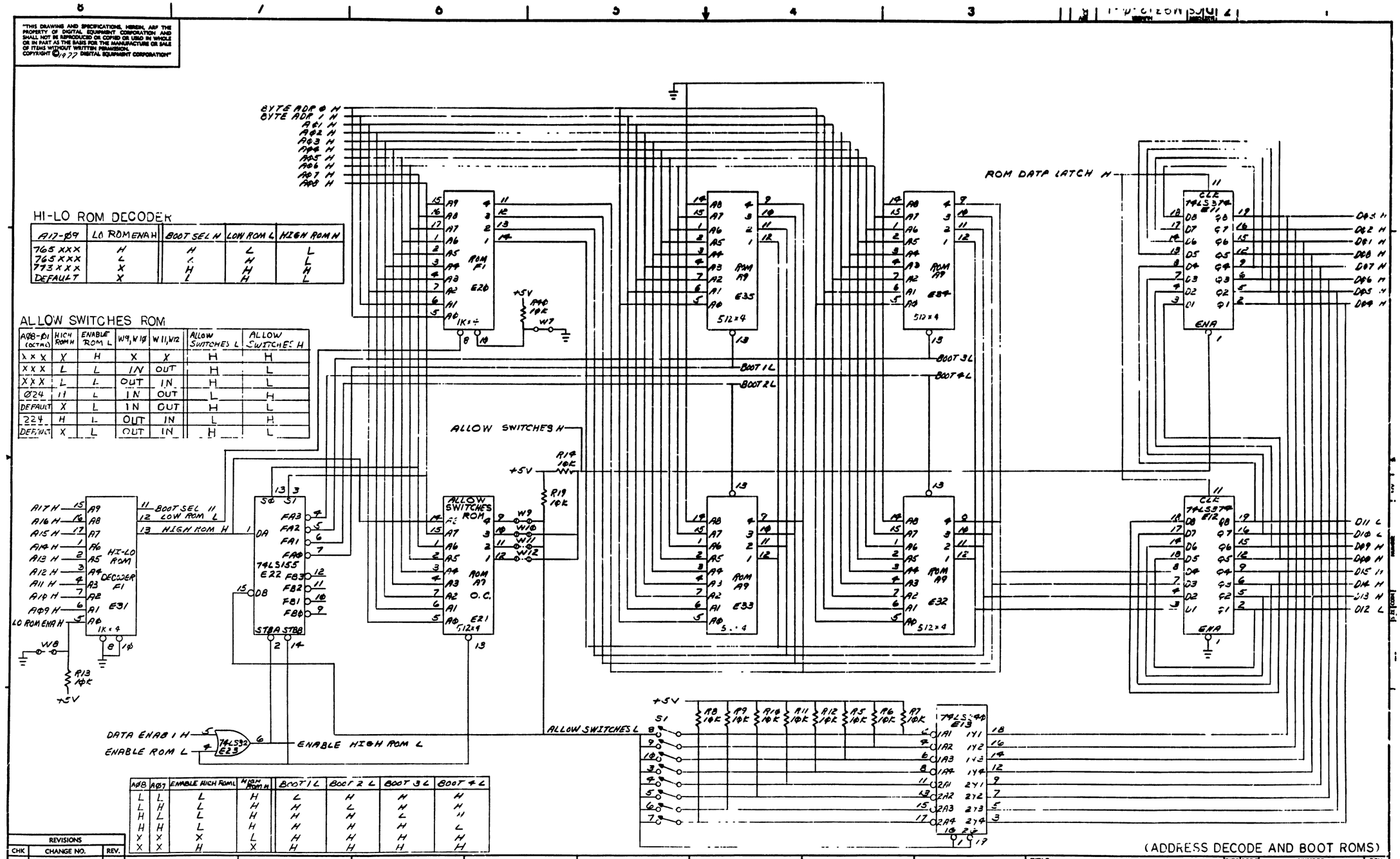

HI-LO ROM DECODER

A17-A09	LO ROM ENA H	BOOT SEL H	LOW ROM L	HIGH ROM H
765 XXX	H	H	L	L
765 XXX	L	L	H	L
773 XXX	X	H	H	H
DEFAULT	X	L	H	L

ALLOW SWITCHES ROM

A08-A01 (OCTAL)	HIGH ROM H	ENABLE ROM L	W9, W10	W11, W12	ALLOW SWITCHES L	ALLOW SWITCHES H
XXX	X	H	X	X	H	H
XXX	L	L	IN	OUT	H	L
XXX	L	L	OUT	IN	H	L
024	H	L	IN	OUT	L	H
DEFAULT	X	L	IN	OUT	H	L
224	H	L	OUT	IN	L	H
DEFAULT	X	L	OUT	IN	H	L

A08	A07	ENABLE HIGH ROM L	HIGH ROM H	BOOT 1 L	BOOT 2 L	BOOT 3 L	BOOT 4 L
L	L	L	H	L	H	H	H
L	H	L	H	H	L	H	H
H	L	L	H	H	H	L	H
H	H	L	H	H	H	H	L
X	X	X	L	H	H	H	H
X	X	H	X	H	H	H	H

(ADDRESS DECODE AND BOOT ROMS)

REVISIONS		
CHK	CHANGE NO.	REV.

TITLE	SIZE	CODE	NUMBER	REV.
BOOTSTRAP TERMINATOR	D	CS	M9312-Ø-1	F
SCALE	SHEET 3 OF 4	DIST.		

GEC FORM NO DRD 130

"THIS DRAWING AND SPECIFICATIONS, HEREIN, ARE THE PROPERTY OF DIGITAL EQUIPMENT CORPORATION AND SHALL NOT BE REPRODUCED OR COPIED OR USED IN WHOLE OR IN PART AS THE BASIS FOR THE MANUFACTURE OR SALE OF ITEMS WITHOUT WRITTEN PERMISSION.
COPYRIGHT © , , DIGITAL EQUIPMENT CORPORATION"

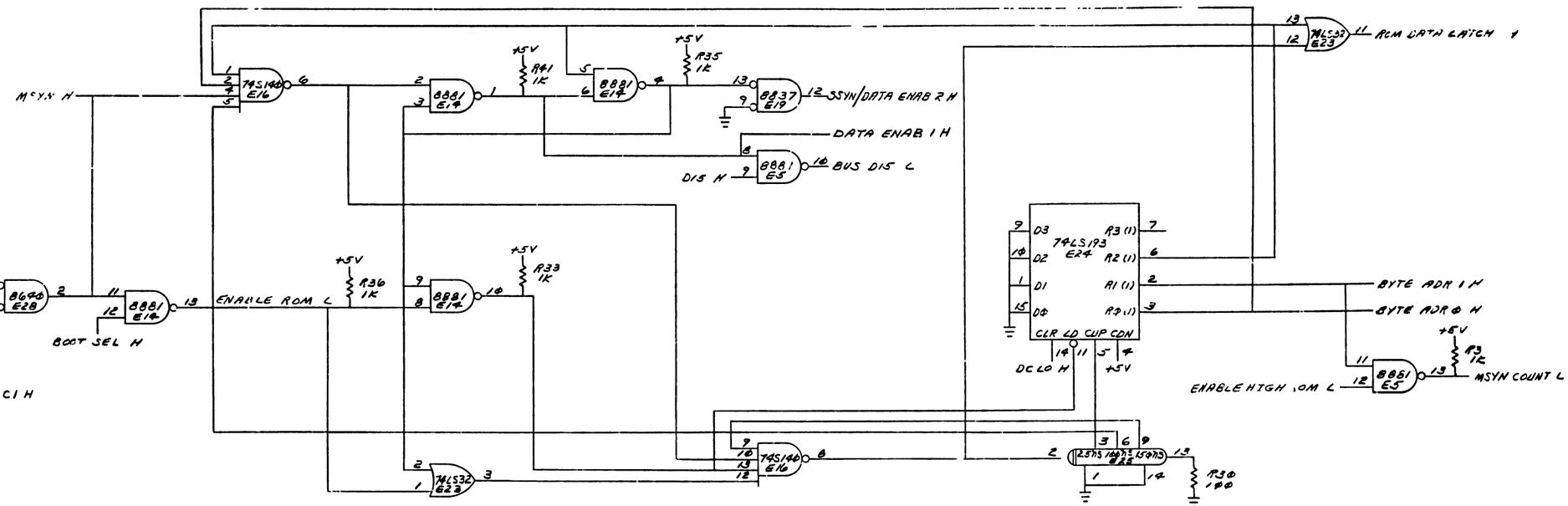

REVISIONS		
CHK	CHANGE NO.	REV.

(TIMING AND CONTROL)

TITLE	SIZE	CODE	NUMBER	REV.
BOOTSTRAP TERMINATOR	D	CS	M9312-0-1	B
SCALE	SHEET 4 OF 4	DIST.		

BLANK